THIS DOCUMENT PROVIDED BY THE ABBOTT AEROSPACE
TECHNICAL LIBRARY
ABBOTTAEROSPACE.COM

NASA SP-8051

NASA
SPACE VEHICLE
DESIGN CRITERIA
(CHEMICAL PROPULSION)

SOLID ROCKET MOTOR IGNITERS

PROPERTY OF
MARSHALL LIBRARY
A&TS-MS-IL

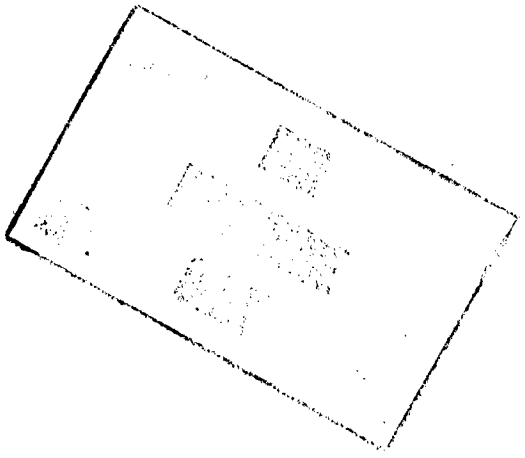

MARCH 1971

NATIONAL AERONAUTICS AND SPACE ADMINISTRATION

THIS DOCUMENT PROVIDED BY THE ABBOTT AEROSPACE
TECHNICAL LIBRARY
ABBOTTAEROSPACE.COM

FOREWORD

NASA experience has indicated a need for uniform criteria for the design of space vehicles. Accordingly, criteria are being developed in the following areas of technology:

Environment
Structures
Guidance and Control
Chemical Propulsion

Individual components of this work will be issued as separate monographs as soon as they are completed. This document, part of the series on Chemical Propulsion, is one such monograph. A list of all monographs issued prior to this one can be found on the last page of this document.

These monographs are to be regarded as guides to design and not as NASA requirements, except as may be specified in formal project specifications. It is expected, however, that these documents, revised as experience may indicate to be desirable, eventually will provide uniform design practices for NASA space vehicles.

This monograph, "Solid Rocket Motor Igniters," was prepared under the direction of Howard W. Douglass, Chief, Design Criteria Office, Lewis Research Center; project management was by John H. Collins, Jr. The monograph was written by Donald H. Barrett of Rocketdyne Solid Rocket Division, North American Rockwell Corporation, and was edited by Russell B. Keller, Jr. of Lewis. To assure technical accuracy of this document, scientists and engineers throughout the technical community participated in interviews, consultations, and critical review of the text. In particular, Harold E. Childress of Aerojet-General Corporation, Louis Lo Fiego of Bermite Division, Whittaker Corporation, and Samuel Zeman of Thiokol Chemical Corporation reviewed the monograph in detail.

Comments concerning the technical content of this monograph will be welcomed by the National Aeronautics and Space Administration, Lewis Research Center (Design Criteria Office), Cleveland, Ohio 44135.

March 1971

THIS DOCUMENT PROVIDED BY THE ABBOTT AEROSPACE
TECHNICAL LIBRARY
ABBOTTAEROSPACE.COM

GUIDE TO THE USE OF THIS MONOGRAPH

The purpose of this monograph is to organize and present, for effective use in design, the significant experience and knowledge accumulated in development and operational programs to date. It reviews and assesses current design practices, and from them establishes firm guidance for achieving greater consistency in design, increased reliability in the end product, and greater efficiency in the design effort. The monograph is organized into two major sections that are preceded by a brief introduction and complemented by a set of references.

The State of the Art, section 2, reviews and discusses the total design problem, and identifies which design elements are involved in successful design. It describes succinctly the current technology pertaining to these elements. When detailed information is required, the best available references are cited. This section serves as a survey of the subject that provides background material and prepares a proper technological base for the *Design Criteria* and Recommended Practices.

The *Design Criteria,* shown in italic in section 3, state clearly and briefly what rule, guide, limitation, or standard must be imposed on each essential design element to assure successful design. The *Design Criteria* can serve effectively as a checklist of rules for the project manager to use in guiding a design or in assessing its adequacy.

The Recommended Practices, also in section 3, state how to satisfy each of the criteria. Whenever possible, the best procedure is described; when this cannot be done concisely, appropriate references are provided. The Recommended Practices, in conjunction with the *Design Criteria,* provide positive guidance to the practicing designer on how to achieve successful design.

Both sections have been organized into decimally numbered subsections so that the subjects within similarly numbered subsections correspond from section to section. The format for the Contents displays this continuity of subject in such a way that a particular aspect of design can be followed through both sections as a discrete subject.

The design criteria monograph is not intended to be a design handbook, a set of specifications, or a design manual. It is a summary and a systematic ordering of the large and loosely organized body of existing successful design techniques and practices. Its value and its merit should be judged on how effectively it makes that material available to and useful to the designer.

THIS DOCUMENT PROVIDED BY THE ABBOTT AEROSPACE
TECHNICAL LIBRARY
ABBOTTAEROSPACE.COM

CONTENTS

1. INTRODUCTION 1

2. STATE OF THE ART 2

3. DESIGN CRITERIA and Recommended Practices 45

REFERENCES 85

GLOSSARY 95

NASA Space Vehicle Design Criteria Monographs Issued to Date 101

SUBJECT	STATE OF THE ART		DESIGN CRITERIA	
GENERAL	*2.0*	2	*3.0*	45
Design Requirements	*2.0.1*	2	*3.0.1*	45
Ballistic Performance	*2.0.1.1*	2	*3.0.1.1*	46
System Interface	*2.0.1.2*	4	*3.0.1.2*	46
Use Environment	*2.0.1.3*	4	*3.0.1.3*	47
Ignition Theory	*2.0.2*	4		—
Theoretical Treatments of the Physical and Chemical Processes	*2.0.2.1*	6		—
Evaluation of Igniter Energy Release and Transmission	*2.0.2.2*	10		—
Prediction of Propellant Response to Externally Applied Energy	*2.0.2.3*	12		—
INITIATION SYSTEM	*2.1*	15	*3.1*	49
Types of Initiation	*2.1.0*	16		—
Electroexplosive Devices	*2.1.0.1*	16		—
Through-Bulkhead Devices	*2.1.0.2*	16		—
Mechanical Devices	*2.1.0.3*	16		—
Other Devices	*2.1.0.4*	17		—
Low-Voltage Electroexplosive Devices	*2.1.1*	18	*3.1.1*	49
Bridgewire–Prime Charge Design	*2.1.1.1*	18	*3.1.1.1*	49
Prime-Charge Characteristics	*2.1.1.2*	23	*3.1.1.2*	49

THIS DOCUMENT PROVIDED BY THE ABBOTT AEROSPACE
TECHNICAL LIBRARY
ABBOTTAEROSPACE.COM

SUBJECT	STATE OF THE ART		DESIGN CRITERIA	
High-Voltage Electroexplosive Devices	*2.1.2*	23	*3.1.2*	50
Exploding Bridgewire Systems	*2.1.2.1*	23	*3.1.2.1*	50
Voltage-Blocking Devices	*2.1.2.2*	24	*3.1.2.2*	52
Overload Protection		—	*3.1.2.3*	52
Through-Bulkhead Initiators	*2.1.3*	24	*3.1.3*	52
Bulkhead-Donor/Acceptor Charge Design		—	*3.1.3.1*	52
Transition Charge Characteristics		—	*3.1.3.2*	53
Attachment Features		—	*3.1.3.3*	53
Safeguards		—	*3.1.3.4*	53
Initiator Output Charges	*2.1.4*	25	*3.1.4*	54
Characteristics		—	*3.1.4.1*	54
Pressure Output		—	*3.1.4.2*	54
Chemical Properties		—	*3.1.4.3*	54
Safety Features	*2.1.5*	27	*3.1.5*	55
Safe/Arm Systems	*2.1.5.1*	28	*3.1.5.1*	55
Sensitivity to Firing Stimuli	*2.1.5.2*	28	*3.1.5.2*	56
Sensitivity to Induced Current	*2.1.5.3*	29	*3.1.5.3*	56
Sensitivity to Electrostatic Discharge	*2.1.5.4*	29	*3.1.5.4*	57
Delay Systems	*2.1.5.5*	29	*3.1.5.5*	57
ENERGY RELEASE SYSTEM	*2.2*	30	*3.2*	58
Basic Requirements	*2.2.1*	30	*3.2.1*	58
Heat Flux and Pressure		—	*3.2.1.1*	58
Pressure Output Rate		—	*3.2.1.2*	64
Release Rate Effects		—	*3.2.1.3*	68
Ignition Shock		—	*3.2.1.4*	68
Pyrogens	*2.2.2*	31	*3.2.2*	68
Energy Output		—	*3.2.2.1*	68
Propellant Characteristics		—	*3.2.2.2*	69
Energy Propagation		—	*3.2.2.3*	69
Pelleted Pyrotechnics	*2.2.3*	31	*3.2.3*	70
Energy Output		—	*3.2.3.1*	70
Pyrotechnic Characteristics		—	*3.2.3.2*	70
Configuration		—	*3.2.3.3*	72

THIS DOCUMENT PROVIDED BY THE ABBOTT AEROSPACE
TECHNICAL LIBRARY
ABBOTTAEROSPACE.COM

SUBJECT	STATE OF THE ART		DESIGN CRITERIA	
Hypergolic	*2.2.4*	33		—
Minor Types	*2.2.5*	34		—
Films and Coatings	*2.2.5.1*	34		—
Jelly Roll	*2.2.5.2*	34		—
Ignition Cord	*2.2.5.3*	34		—
Igniter Location	*2.2.6*	34		—
Restart Systems	*2.2.7*	35		—
Programmed Restarts	*2.2.7.1*	35		—
Demand Restarts	*2.2.7.2*	35		—
HARDWARE	*2.3*	36	*3.3*	72
Initiation System	*2.3.1*	36	*3.3.1*	72
Pressure Seals and Insulation		—	*3.3.1.1*	72
Housing Material		—	*3.3.1.2*	73
Housing Capability		—	*3.3.1.3*	73
Housing Closure		—	*3.3.1.4*	74
Energy Release System	*2.3.2*	37	*3.3.2*	74
Adapters	*2.3.2.1*	37	*3.3.2.1*	74
Chambers	*2.3.2.2*	38	*3.3.2.2*	76
DESIGN PROOF TESTING	*2.4*	39	*3.4*	79
Initiators	*2.4.1*	39	*3.4.1*	79
Firing Sensitivity	*2.4.1.1*	39	*3.4.1.1*	79
Bridge Resistance	*2.4.1.2*	40	*3.4.1.2*	79
Induced Current Sensitivity	*2.4.1.3*	40	*3.4.1.3*	79
Electrostatic Discharge Sensitivity	*2.4.1.4*	41	*3.4.1.4*	80
Calorific Output	*2.4.1.5*	41	*3.4.1.5*	80
Pressure Output	*2.4.1.6*	41	*3.4.1.6*	80
Heat Flux Output	*2.4.1.7*	41	*3.4.1.7*	81
Energy Release System	*2.4.2*	42	*3.4.2*	81
Pyrogens	*2.4.2.1*	42	*3.4.2.1*	81
Pyrotechnics	*2.4.2.2*	42	*3.4.2.2*	81

THIS DOCUMENT PROVIDED BY THE ABBOTT AEROSPACE
TECHNICAL LIBRARY
ABBOTTAEROSPACE.COM

SUBJECT	STATE OF THE ART		DESIGN CRITERIA	
Hardware	*2.4.3*	42	*3.4.3*	82
Structural Adequacy		—	*3.4.3.1*	82
Corrosion Resistance		—	*3.4.3.2*	82
Moisture Resistance		—	*3.4.3.3*	82
Environmental Capability		—	*3.4.3.4*	82
Complete Igniters	*2.4.4*	43	*3.4.4*	82
Pyrogen Pressure-Time Performance	*2.4.4.1*	43	*3.4.4.1*	82
Pyrotechnic Pressure-Time Performance	*2.4.4.2*	43	*3.4.4.2*	83
Igniter Heat Flux Output	*2.4.4.3*	44	*3.4.4.3*	83

THIS DOCUMENT PROVIDED BY THE ABBOTT AEROSPACE
TECHNICAL LIBRARY
ABBOTTAEROSPACE.COM

LIST OF FIGURES

Figure	Title	Page
1	Typical solid rocket pyrogen ignition system	3
2	Effect of pressure on propellant ignition time at various heat flux values	13
3	Effect of heat flux and pressure on ignition time	14
4	Watt density graph for lead styphnate ignition charge	21
5	Model of hot wire initiator	22
6	Through-bulkhead initiator	25
7	Pyrogen igniter	31
8	Pyrodyne igniter	32
9	Pelleted pyrotechnic	32
10	Igniter charge weight vs. motor free volume	59
11	Chart for estimating ignition energy requirements	62
12	Motor ignition time as a function of $\dot{m}_i$	65
13	Typical ignition pressure transient	65
14	Mass balance system	66

LIST OF TABLES

Table	Title	Page
I	Frequently Specified Environmental Requirements for Igniters	5
II	Typical Formulations for Output Charges	26

THIS DOCUMENT PROVIDED BY THE ABBOTT AEROSPACE
TECHNICAL LIBRARY
ABBOTTAEROSPACE.COM

SOLID ROCKET MOTOR IGNITERS

1. INTRODUCTION

The propulsive force of a solid rocket motor is derived from the controlled combustion of the solid propellant fuel at high temperatures and pressures. The function of the igniter is to induce this combustion reaction in a controlled and predictable manner and at a stipulated rate. Ignition system designers in general have been able to comply satisfactorily with the requirements imposed on igniters. However, a primary problem exists in the inability to meet requirements at low development costs with an optimum and reliable design. The cause is largely a lack of theoretically sound bases for establishing fundamental design methods. It has been necessary to rely on empirically derived relationships that do not effectively coordinate all pertinent variables and are not suitable for design optimization. This monograph has been written to assist the designer in correcting these deficiencies and to provide a concise but comprehensive guide to the practices and procedures that will produce successful igniter designs.

In the design approach presented herein, it is essential that the designer understand both the theoretical and practical aspects of the ignition process. Accordingly, the monograph presents a summary of the current knowledge on solid propellant ignition theory, followed by specific discussions of each of the igniter essential parts, their interrelationships, and the methods for evaluating them. The constituents of most solid rocket igniters are (1) an initiation system, (2) an energy release system, and (3) the hardware and other components that physically contain (1) and (2) and provide for mounting them in or to the rocket motor. The types of initiators, energy release systems, and associated hardware used in operational rocket motors, and some of those now in advanced development stages, are described. Design methods developed and the theoretical or empirical bases on which they are established are critically analyzed.

The initial step in the development of a design is the establishment of all specified limitations and functional requirements imposed on the ignition system. As the design progresses, the features and capabilities necessary for each of the components must be similarly established. Therefore, this monograph develops the material based on these requirements so the designer can approach the design problem in a systematic way. The development includes consideration of the restraints imposed as a result of system requirements, e.g., the physical interface, environment, operating conditions, safety, and reliability, as well as those restraints necessary to comply with functional requirements of the motor such as ignition time, pressurization rate, and shock output. Each form of constraint is considered in terms of its impact on the individual components of the igniter, on each of the three basic constituents, and on the overall design.

THIS DOCUMENT PROVIDED BY THE ABBOTT AEROSPACE
TECHNICAL LIBRARY
ABBOTTAEROSPACE.COM

2. STATE OF THE ART

Comprehension of the ignition process has been increased greatly by the extensive research made in recent years. The application of this knowledge to igniters is now resulting in significant improvements in design capabilities. The status and relevance of these developments in the analytical treatment of ignition phenomena are presented in this section, together with descriptions of existing initiation, energy release, and hardware systems.

2.0 General

Figure 1 illustrates the components of a typical solid rocket pyrogen ignition system. As the name implies, the initiation system actuates the motor ignition process. A mechanical, electrical, or chemical input stimulus is converted, within the initiator, to an energy output that ignites the energy release system. The energy release system supplies the energy, normally heat, required to ignite the propellant in the rocket motor. The initiator and the energy release components are physically retained by hardware components such as igniter bodies, cases, nozzles, and housings. This hardware also provides the means for mounting the igniter (1) as a permanent part of the motor pressure vessel; (2) on a temporary support, either consumed or ejected; or (3) on a launcher-retained mounting.

Many types and variations of solid rocket igniters have been used successfully to ignite solid propellant rocket motors. Detailed discussions of the characteristics of the different initiation systems, energy release systems, and hardware comprising these types are presented in sections 2.1, 2.2, and 2.3, respectively. One of the first tasks a designer must understake is to determine the type of system to be used for a specific application. In making this selection, it is important that the factors influencing design be assimilated and evaluated. These factors generally fall into one of three areas: ballistic performance, system interface, or environmental conditions of use.

2.0.1 Design Requirements

2.0.1.1 Ballistic Performance

Ballistic performance includes ignition times, ignition transient characteristics, and shock level outputs. Limits on these characteristics are dictated by the end use requirements, and may be expressed in many different ways, as illustrated by the following examples:

(1) Specified time to attain a given performance level, e.g., 10 percent of maximum pressure, 75 percent of average thrust, etc.
(2) Specified envelope for thrust, pressure, or impulse versus time.
(3) Specified limit on rate of thrust onset or pressurization.

THIS DOCUMENT PROVIDED BY THE ABBOTT AEROSPACE
TECHNICAL LIBRARY
ABBOTTAEROSPACE.COM

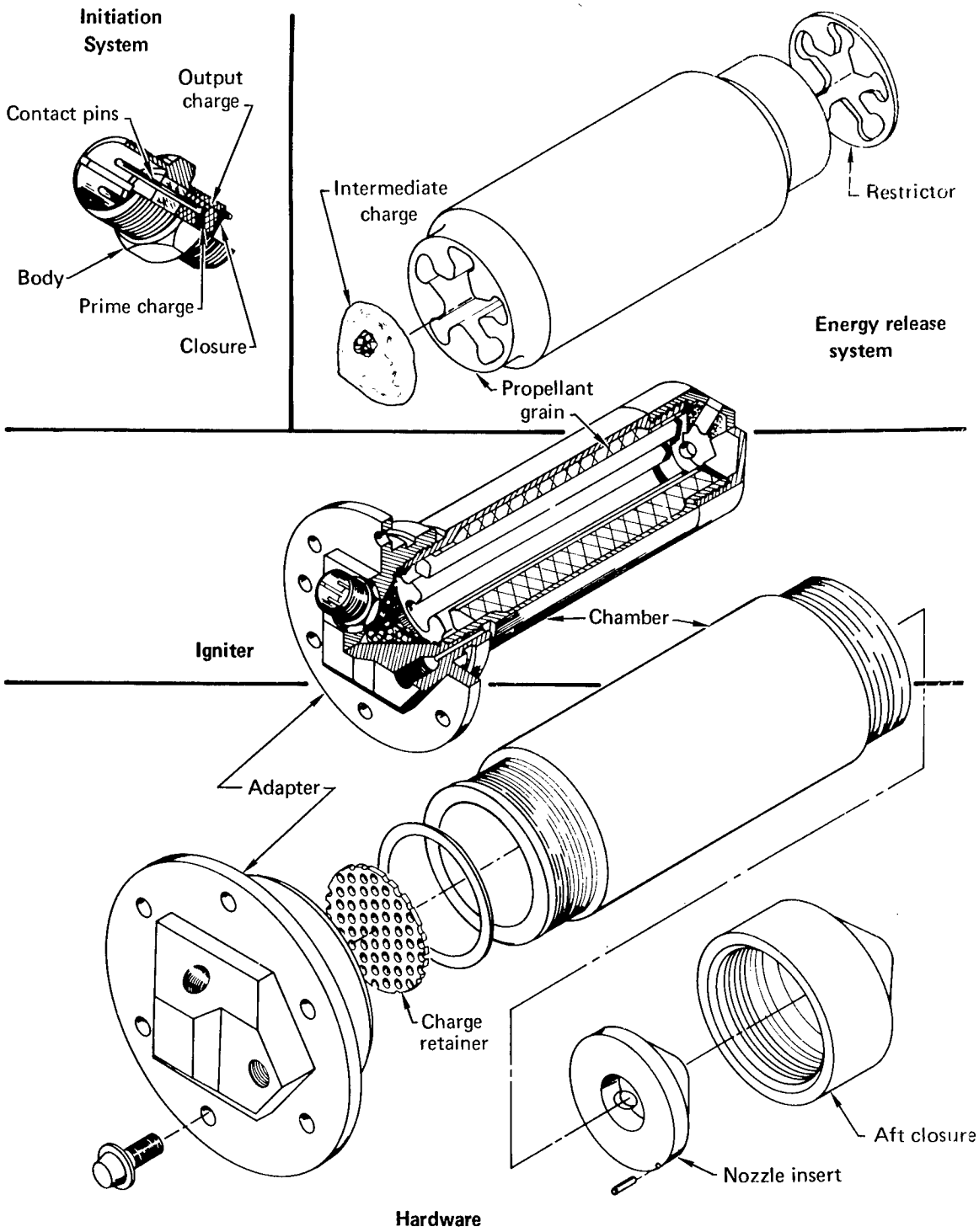

Figure 1.—Typical solid rocket pyrogen ignition system.

THIS DOCUMENT PROVIDED BY THE ABBOTT AEROSPACE
TECHNICAL LIBRARY
ABBOTTAEROSPACE.COM

The intended mission of the motor may also require an intentional time delay between application of the activating energy and motor ignition by the igniter. The delay may range from a few milliseconds to several seconds, and it may involve sequencing several motors or several pulses in one motor. These delays normally are made an integral part of the initiator.

Having defined the specified performance requirements, the designer must evaluate the influence of motor design features on the choice of igniter type. The internal configuration of the motor, the grain design, propellant properties, and the type of nozzle closure all affect the choice of an igniter.

2.0.1.2 System Interface

Physical limitations on size, weight, and configuration usually are imposed on a solid rocket motor to ensure proper fit with other components and overall compliance with the system objectives. These limitations affect igniter features, e.g., the mating connections with the electrical system or other means of firing the igniter, attachments to any safe/arm actuation methods involved, and envelope dimensions that restrict the size or location of external igniter components. The method of initiation and its design features must be consistent with the type, magnitude, and source of power provided by the system as an initiating impulse.

2.0.1.3 Use Environment

Environmental conditions that igniters are required to withstand depend primarily on the application and storage conditions of the end item, and usually are specified at the start of the design effort. These conditions are covered by general specifications, e.g., MIL-I-23659 (ref. 1), MIL-STD-322 (ref. 2), or MIL-E-5272 (ref. 3). Some of the more common requirements and appropriate test procedures are presented in table I. The best use of requirements and tests is made when the test method is evaluated with respect to the actual anticipated environment of the igniter before the test is invoked as a requirement. The use of general environment specifications in total, when only portions are actually required, is a common and expensive fault of component specifications.

2.0.2 Ignition Theory

In developing analytical models to define design requirements for solid rocket igniters, separate investigations of three fundamental areas have evolved:

(1) Provision of valid theoretical treatments of the physical and chemical processes involved.
(2) Development of techniques for accurate evaluation of igniter energy release and transmission.

THIS DOCUMENT PROVIDED BY THE ABBOTT AEROSPACE
TECHNICAL LIBRARY
ABBOTTAEROSPACE.COM

Table I.—Frequently Specified Environmental Requirements for Igniters

Requirement	MIL-I-23659 (ref. 1)		Apollo STD initiator		MIL-STD-322 (ref. 2)		Notes
	No. units tested	Test requirement	No. units tested	Test requirement	No. units tested	Test Requirement	
Leak	198	10^{-5} cc air/sec	548	10^{-6} cc He/sec			
Jolt	12	MIL-STD-331/101 (ref. 4)			24	MIL-STD-331/101	Nonoperational
Jumble	12	MIL-STD-331/102					Nonoperational
Drop	6	40 ft			25	MIL-STD-331/103 (40 ft)	Nonoperational
Drop			6	8 ft			Operational
Shock	12	200 g, 1.5 ± 0.4 msec	40	100 g, 11 msec			
Temperature and humidity	36	−65° F/160° F, 90% RH, 28 day	16	−70° F/165° F, 95% RH, 10 day	50	−65° F/160° F, 95% RH, 28 day	MIL-STD-331/105
Vibration	12	10 to 2000 cps @ ±10 g 90 min @ resonance	48	10 to 200 cps @ 0.01 to 0.16 g/cps, 22 min	24	MIL-STD-331/104	
Salt spray	12	MIL-E-5272 (ref. 3) Proc I (168 hr)	10	MIL-STD-331/107 48 hr, operational 96 hr, nonoperational			
High temperature storage	36	160° F, 24 day			300	160° F for 28, 36, 84 day	
Temperature cycling			172	20 cycles, 1 hr @ −260°F&½hr@300°F			
Low temperature function	12	12 hr @ −80° F	30	1 hr @ −260° F	75	Conditioned to −65° F	
High temperature function	12	12 hr @ 225° F	50	1 hr @ 300° F	75	Conditioned to 160° F	
Altitude	24	80,000 ft @ −80° F& 225° F	122	350,000 ft @ 300° F			
Cookoff	12	200° F for 360 hr	6	400° F for 1 hr			Nonoperational
Fungus resistance							MIL-STD-331/110
Rain test							MIL-STD-331/109

THIS DOCUMENT PROVIDED BY THE ABBOTT AEROSPACE
TECHNICAL LIBRARY
ABBOTTAEROSPACE.COM

(3) Development of methods for reliable prediction of the response of the propellant to externally applied energy.

Consequently, separate discussions of ignition theory for these areas are presented.

2.0.2.1 Theoretical Treatments of the Physical and Chemical Processes

An adequate description of the propellant ignition process must consider the energy contributions from the external source and the exothermic reactions induced at or near the propellant surface as a result of this energy input. Because of the complexity and variety of solid propellant ingredients, the possible chemical reactions and forms of thermal feedback are so numerous that no single theory capable of describing all types of ignition behavior has been developed, or is anticipated. However, for certain propellants, one or two rate-controlling reactions probably exist that can be isolated and defined analytically and that are sufficiently dominant to permit adequate predictions of the ignition characteristics. These controlling reactions vary among propellant types and ignition conditions, and this variability may account for many of the anomalies between data and theories of different investigators.

In most practical ignition systems, solid propellant ignition is dominated by a thermal induction interval during which the temperature of the propellant surface is raised by external heating to the temperature at which chemical reaction rates become significant. Propellant exothermic reactions rapidly become the dominant heat source and ignition of the propellant is achieved.

The search for an adequate theory to explain fully the solid propellant ignition process has resulted in the creation of several analytical models, three of which appear to represent the primary schools of thought. These three models are generally referred to as the solid-phase, heterogeneous, and gas-phase ignition theories. Although each theory has demonstrated some credence under certain conditions, no one theory is universally accepted by specialists in the field. The primary differences among the models are the location of the exothermic reaction with respect to the propellant surface and the physical state of the reacting ingredients. One of the most comprehensive analyses of the theories encountered is provided in reference 5. This reference is the major source of information for the following ignition theories review and the implications of the assumptions involved in them.

2.0.2.1.1 Solid-Phase Theory

The first analytical model describing the solid-phase theory of solid propellant ignition is generally attributed to Hicks (ref. 6). This model defines the transient

THIS DOCUMENT PROVIDED BY THE ABBOTT AEROSPACE
TECHNICAL LIBRARY
ABBOTTAEROSPACE.COM

temperature of the propellant surface during ignition in terms of heat transferred to the surface from externally applied heat flux and heat generated by exothermic chemical reactions of the solid propellant. Making the classical assumptions of one-dimensional heat flow in a semi-infinite solid, the thermal heating is described by the partial differential equation

$$\rho c \left(\frac{\partial T}{\partial t} \right) = k \left(\frac{\partial^2 T}{\partial x^2} \right) + \rho Q Z \exp\left(-E/RT\right) \qquad (1)^*$$

where

ρ = propellant density in solid state, gm/cm^3
c = specific heat at constant pressure, cal/gm-°C
T = temperature, °K
t = time, sec
k = coefficient of thermal conductivity, cal/cm-sec-°C
Q = heat of reaction per unit mass, cal/gm
Z = pre-exponential factor, sec^{-1}
E = energy of activation, cal/mol
R = universal gas constant, cal/°K-mol
x = distance from gas-solid interface, cm

In more recent studies, terms have been added in the equation to include additional factors that influence the energy accumulation rate. The total equation is then written

$$\rho c \left(\frac{\partial T}{\partial t} \right) = k \left(\frac{\partial^2 T}{\partial x^2} \right) + \rho c r \left(\frac{\partial T}{\partial x} \right) + \beta \dot{q} \exp\left(-\beta x\right) + \rho Q Z \exp\left(-E/RT\right) \qquad (2)$$

where

$\rho c r \left(\frac{\partial T}{\partial x} \right)$ = effect of surface regression due to reaction of the ingredients (2a)

$\beta \dot{q} \exp\left(-\beta x\right)$ = energy absorption due to optical transparency (2b)
r = linear regression rate of solid propellant surface, cm/sec
β = extinction coefficient for radiant transmission, cm^{-1}
$\dot{q}$ = energy flux per unit area, cal/cm^2-sec

In addition, the coefficient Z may be modified to show the effect of change in concentration of reactants caused by depletion during the ignition transient. Boundary conditions and assumptions involved are presented and critically analyzed in reference 5 and documents referenced therein.

*Symbols are defined in the Glossary.

THIS DOCUMENT PROVIDED BY THE ABBOTT AEROSPACE
TECHNICAL LIBRARY
ABBOTTAEROSPACE.COM

This theory has been referred to as the solid-phase "thermal" theory, because of the neglect of any details of chemical kinetics or diffusion or of any participation of gas-phase species. The theory was developed in connection with the behavior of double-base propellants, which were known to have exothermic condensed phase reactions. The primary weaknesses of this theory lie (to date) in neglect of the true physical nature of a reacting surface layer, which would be different from the original propellant surface because of chemical change, bubbling, melting, etc. Further, the theory neglects processes involving gas-phase species that, from experiments, are known to be important in the reactions.

2.0.2.1.2 Gas-Phase Theory

It has been demonstrated experimentally that under certain conditions environmental gas composition and pressure have a definite effect on ignition characteristics of some solid propellants. The inability of the solid-phase theory to include provisions for this effect has motivated the development of the gas-phase theory of ignition (refs. 7 and 8). This theory assumes that the hot, oxidizing, environmental gas initially causes endothermic decomposition of the fuel. Fuel vapors thus created diffuse into the hot, oxidizing gas and react exothermically near the propellant surface. The analytical model depicting this theory is one-dimensional, with the exothermic reaction rate being dependent on the fuel-oxidizer concentrations and the gas temperature. The set of differential equations describing the mass and energy transfer of the reaction is as follows:

Mass diffusion:
$$\left(\frac{\partial C_f}{\partial t}\right) = \mathbf{K}_f \left(\frac{\partial^2 C_f}{\partial x^2}\right) - C_f C_o Z \exp\,(-E/RT) \tag{3}$$

$$\left(\frac{\partial C_o}{\partial t}\right) = \mathbf{K}_o \left(\frac{\partial^2 C_o}{\partial x^2}\right) - C_f C_o Z \exp\,(-E/RT) \tag{4}$$

Energy diffusion:
$$\left(\frac{\partial T}{\partial t}\right) = \alpha \left(\frac{\partial^2 T}{\partial x^2}\right) + \left(\frac{Q}{\rho c}\right) C_f C_o Z \exp\,(-E/RT) \tag{5}$$

where

C_f = concentration of reactants in fuel, gm/cm^3
$\mathbf{K}$ = mass diffusivity, cm^2/sec
C_o = concentration of reactants in oxidizer, gm/cm^3

α = thermal diffusivity $\left(= \frac{k}{\rho c}\right)$, cm^2/sec

Boundary conditions and assumptions are defined in references 8 and 9; reference 5 provides a critical analysis of the impact of the assumptions.

THIS DOCUMENT PROVIDED BY THE ABBOTT AEROSPACE
TECHNICAL LIBRARY
ABBOTTAEROSPACE.COM

Tests to evaluate the gas-phase theory have been conducted in shock tube experiments (ref. 10) using an oxidizing atmosphere to produce ignition. The details of the model are chosen to match these particular experiments, with the assumption that beginning with the arrival of the shock wave at the propellant surface the surface temperature rises discontinuously to a value causing fuel pyrolysis. The ignition delay is then caused by the time for diffusion of fuel into oxidizer to a degree providing self-sustaining exothermic gas phase reactions. Since it is assumed in the existing gas phase models that the oxidizer comes from the gaseous environment rather than the propellant, there remains some uncertainty about the detailed relevance of the models to practical propellant ignition processes. The related shock tube experiments have been conducted primarily with oxidizing atmospheres that conform to the analytical models but do not resolve the question of relevance. Both the models and experiments do, however, exhibit a dependence of ignition behavior on atmospheric environment similar to that obtained in rocket motor situations, a dependence the condensed phase model fails to explain.

2.0.2.1.3 Heterogeneous

The capability of certain oxidizing liquids and gases to react exothermically on contact with solid propellants has resulted in an ignition theory constructed around this heterogeneous reaction. This theory consists of a one-dimensional model with mass and energy diffusion into a semi-infinite oxidizing gas domain and heat conduction into a semi-infinite solid. The surface reaction, which provides the total available energy, is assumed to be rate dependent as a function of temperature, as described by an Arrhenius-type relationship. Ignition is defined as the point where some arbitrarily selected high rate of temperature change is attained at the propellant surface. The theory is described mathematically by the following model, with initial and boundary conditions as defined in reference 11:

$$\left(\frac{\partial T_c}{\partial t} \right) = \alpha_c \left(\frac{\partial^2 T_c}{\partial x^2} \right) \tag{6}$$

$$\left(\frac{\partial T_g}{\partial t} \right) = \alpha_g \left(\frac{\partial^2 T_g}{\partial x^2} \right) \tag{7}$$

$$\left(\frac{\partial C_o}{\partial t} \right) = \mathbf{K}_o \left(\frac{\partial^2 C_o}{\partial x^2} \right) \tag{8}$$

$$\left(\frac{\partial C_p}{\partial t} \right) = \mathbf{K}_p \left(\frac{\partial^2 C_p}{\partial x^2} \right) \tag{9}$$

THIS DOCUMENT PROVIDED BY THE ABBOTT AEROSPACE
TECHNICAL LIBRARY
ABBOTTAEROSPACE.COM

Symbols are as previously defined; subscripts *p*, *c*, and *g* refer to the products of combustion, the condensed phase, and the gas phase, respectively.

Based on this theory, concentration of the oxidizer is expected to have a dominant effect on ignition delay as observed during investigations of hypergolic ignition. The hypergolic theory was extended (by qualitative arguments) to include cases where the oxidizing species are supplied by decomposition of oxidizer in the propellant as a result of external heating, with the oxidizer products reacting with the fuel in the condensed phase or at the surface to provide a heterogeneous reaction. A comprehensive analysis of this theory and its relationship to the solid- and gas-phase theories of ignition is provided in reference 5. As in the case of the gas-phase theory the heterogeneous theory offers an explanation of the effect of gaseous environment on ignition.

2.0.2.1.4 Discussion

An adequate comparison of the relative abilities of the above theories to predict ignition accurately is not feasible, because they have been formulated around different assumptions with different sources of external heating. Hypergolic ignition includes no external heat source; the gas-phase theory assumes an instantaneous step increase of the propellant surface temperature to that required for decomposition. Conversely, the solid-phase theory does not account for the demonstrated effect of the concentration of oxidizing gas in the environment and of pressure on ignition. When time required from initiation of the chemical reaction at the propellant surface to steady-state combustion conditions (or possible attainment of "runaway" reactions) is a significant portion of the overall ignition event, the choice of ignition criteria is an important consideration. This also varies among the three prominent theories, as previously discussed.

The knowledge obtained in the development of each of the above theories has made a significant contribution to comprehension of the ignition process, even though none of the theories in its present state adequately defines the complete ignition process. The primary need is for a convenient laboratory experiment that can adequately simulate rocket motor ignition conditions combined with a unified analytical model that incorporates condensed, surface, and gas-phase reactions while conforming to the conditions of the experiment.

2.0.2.2 Evaluation of Igniter Energy Release and Transmission

The response of the motor propellant to a given externally applied level of energy was discussed in the previous section. The problem of designing an igniter to deliver this level of energy, however, was not considered. Research and theoretical develop-

THIS DOCUMENT PROVIDED BY THE ABBOTT AEROSPACE
TECHNICAL LIBRARY
ABBOTTAEROSPACE.COM

ments in this area have been much less extensive; nevertheless, some significant progress in refining design techniques has been achieved.

The determination of the energy transferred to a propellant surface from a given igniter design requires (1) definition of the space-time relationship of the igniter energy efflux, and (2) knowledge of primary modes of heat transfer and their associated heat-transfer coefficients.

To obtain the total rate of heat input to the propellant surface, the heat transmitted through convection, conduction, radiation, recombination, chemical reaction, and condensation at the propellant surface must be included. Equations for each of these are provided in reference 12. However, during the thermal induction interval the convection and radiation modes are strongly dominant, and other effects are normally neglected. For this condition, the heat transfer at any point along the flow channel in the rocket motor may be expressed in the relationship

$$\dot{q} = h(T_g - T_s) + \sigma\varepsilon\ (T_g^4 - T_s^4) \tag{10}$$

where

h = film heat-transfer coefficient, cal/sec-cm^2-°K
T_g = igniter gas temperature at point of contact with propellant surface film, °K
T_s = temperature at the propellant surface, °K
σ = Stefan-Boltzman constant, cal/cm^2-sec-(°K)^4
ε = hot particle emissivity, dimensionless

This relationship restricts the problem to defining h, T_g, and ε. In many applications (e.g., pyrogens in motors with small ports), the radiation effect is negligible and the heat flux reduces to

$$\dot{q} = h(T_g - T_s) \tag{11}$$

The development of an adequate relationship to predict the value for h has been pursued by a number of investigators (refs. 13 through 18). Each investigator uses a correlation of the Reynolds number (Re), Prandtl number (Pr), and Nusselt number (Nu) in the form

$$\mathrm{Nu} = a\mathrm{Re}^b\mathrm{Pr}^c = \frac{D_p h}{k_g},\ \text{dimensionless} \tag{12}$$

where D_p is the motor port diameter and k_g is the thermal conductivity of the flowing gas. However, there are differences in the empirically derived numbers assigned

THIS DOCUMENT PROVIDED BY THE ABBOTT AEROSPACE
TECHNICAL LIBRARY
ABBOTTAEROSPACE.COM

to coefficient a and to exponents b and c. The selection of the correlation applicable to particular conditions usually is preceded by a careful review of the conditions and parameters involved with each of the above references.

A quantitative description of typical igniter flux patterns is an area of technology lacking in the development of solid rocket igniter design procedures. The most common approach is to assume a constant (spacewise and timewise) igniter gas temperature that is estimated from a known or calculated isochoric flame temperature expanding into a given port volume. Either the effect of space distribution of heat losses is ignored or an average loss is estimated as a function of igniter mass flow rate, gas thermodynamic properties, and average heat flux to the propellant. The equation may be put into a more general form by expressing the temperature as a space-dependent ratio of local gas temperature T_g to the isochronic flame temperature T_o. One equation (ref. 17) so derived is

$$\theta = \frac{1}{\gamma} \exp\left(-\lambda x^{0.8}\right) \tag{13}$$

where

$$\theta = T_g/T_o \tag{13a}$$

$$\lambda = 0.037 \left(\frac{\mu g}{\dot{m}_i}\right)^{0.2} \frac{P}{A_f^{0.8}} \tag{13b}$$

$\dot{m}_i$ = igniter mass flow rate, lb_m/sec
P = perimeter of flow area, ft
A_f = flow area in chamber, ft^2
x = distance from nozzle exit, ft
μ = dynamic viscosity of igniter propellant exhaust gas, $lb_f\text{-}sec/ft^2$
g = gravitational constant, ft/sec^2
γ = ratio of specific heats

The recently developed analytical methods discussed above represent significant advances in the ability to describe the ignition process as a function of igniter and motor variables. However, the accuracy and applicability of the methods are limited by the assumptions involved and by uncertainties in values of the constants. These limitations are assessed carefully before any attempt is made to apply the analyses in a given situation.

2.0.2.3 Prediction of Propellant Response to Externally Applied Energy

The theoretical and empirical treatments discussed in section 2.0.2.2 have been concerned with determining the increase in propellant surface temperature induced by an

THIS DOCUMENT PROVIDED BY THE ABBOTT AEROSPACE
TECHNICAL LIBRARY
ABBOTTAEROSPACE.COM

igniter energy efflux. To apply the treatments properly, the designer must have knowledge of the propellant temperature profile required to obtain sustained ignition for the specific propellant under the conditions applicable to a particular motor.

Despite a lack of agreement on the controlling reactions in solid propellant ignition, research and theoretical explorations involved in the previously described experimentation (sec. 2.0.2.1) have provided some valuable basic data on the response of propellants to applied flux. The quantity of energy required to ignite commonly used motor propellants has been evaluated by use of convective heating (refs. 19 through 21), conductive heating (ref. 22), radiative heating (refs. 23 through 26), and chemical heating (ref. 27). Effect of the rate at which energy is applied, environmental pressure, and environmental gas composition have each been evaluated and found to be a significant factor under certain conditions.

The arc-image furnace, which uses radiative heating, has been used extensively to evaluate propellant ignition characteristics. This furnace permits closely controlled flux intensities to be varied independently of such environmental conditions as pressure, gas composition, and gas velocity. A significant contribution so obtained is the determination of pressure effect on propellant ignition. It has been established that most propellants exhibit a "critical ignition pressure" below which ignition cannot be achieved and that ignition energy requirements tend to decrease as pressure is increased above this level until a pressure-independent regime is reached. This characteristic is illustrated graphically in figure 2 (ref. 28).

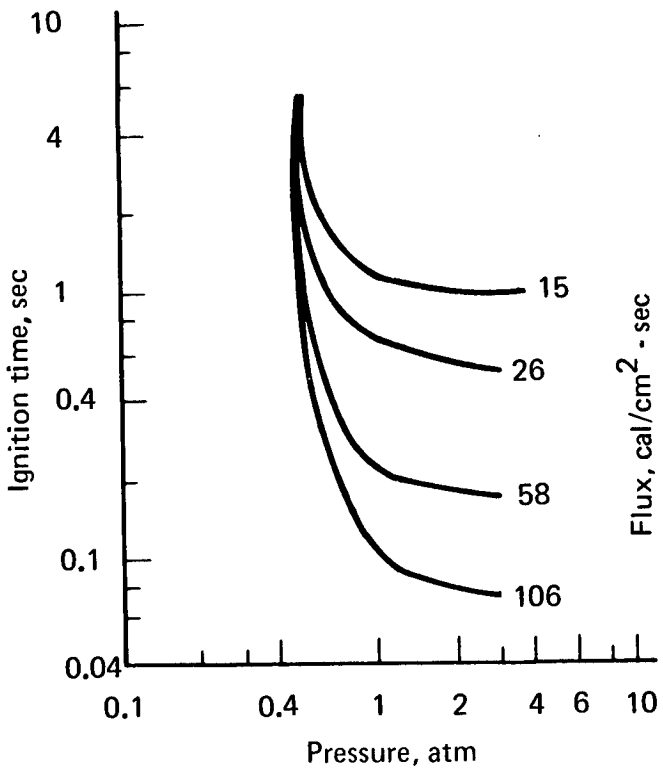

Figure 2.—Effect of pressure on propellant ignition time at various heat flux values (ref. 28).

THIS DOCUMENT PROVIDED BY THE ABBOTT AEROSPACE
TECHNICAL LIBRARY
ABBOTTAEROSPACE.COM

A useful method of presenting data, common to many laboratories, is a plot on logarithmic coordinates of the ignition time t versus heat flux $\dot{q}$. This practice is based on the following heat conduction equation relating surface temperature T_s to exposure time t at a constant flux:

$$\dot{q}\sqrt{t} = \frac{(T_s - T_o)\sqrt{\pi \rho c k}}{2} \tag{14}$$

Thus, if a critical surface temperature exists at ignition ($T_s = T_i$) and the initial temperature T_o is fixed, the terms to the right of the equation are essentially constant when time $t = t_i$ and the plot will result in a straight line having a slope of -2. An example is given in figure 3 (ref. 28).

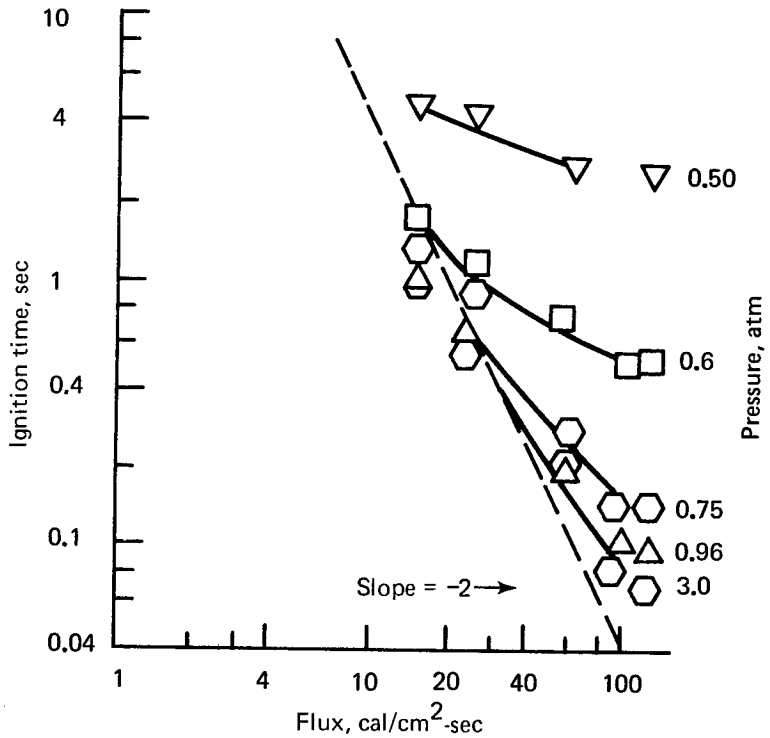

Figure 3.—Effect of heat flux and pressure on ignition time (ref. 28).

It is obvious from the effects shown in figure 3 that the assumption of a single constant "ignition temperature" is not valid under all conditions, especially at low pressures and high flux levels. Samples become increasingly difficult to ignite as the low-pressure deflagration limit is approached, with increasing pyrolysis of the surface before ignition is achieved. Under these conditions the surface temperature at the moment of ignition depends on the extent of pyrolysis, on heating rate, and on pressure. Since the period of pyrolysis may be comparable to the period of thermal induction of the solid, major deviation from the relation $\dot{q}\sqrt{t} =$ constant is to be expected, as exhibited in figure 3. The concept of ignition temperature is not very useful under these low pressure–high flux conditions.

THIS DOCUMENT PROVIDED BY THE ABBOTT AEROSPACE
TECHNICAL LIBRARY
ABBOTTAEROSPACE.COM

On the other hand, the ignition temperature becomes a more useful concept at elevated pressure, because the thermal induction time becomes the dominant part of the ignition time (i.e., the time to achieve rapid self-heating after the onset of pyrolysis at some temperature T_i is very short). Hence all data fall near the $T = T_i$ line shown by the broken line in figure 3.

Most propellant ignition data have been obtained by the arc-image furnace method because of its convenience and low operational cost as a laboratory tool. The principal drawback of this method stems from the fact that radiant energy transfer usually is not the dominant mode of surface heating in rocket motors. Some propellant ingredients are rather transparent, and radiant energy may be absorbed at an appreciable depth, yielding a temperature-time history different from that produced by simple conductive heating from the surface. The extent to which this may give different ignition times at the same heating rate is discussed in reference 29. In view of the factors in favor of the radiant ignition techniques, its use probably will continue. However, nonreactive opaque surface coatings and radiant sources in a wavelength for which all ingredients are opaque (CO_2 lasers are coming into use) are needed improvements.

As noted in reference 19, there is a need both to obtain more uniformity in the methods and procedures used with the arc-image furnace and to improve data correlation with other test methods and motor conditions. The primary areas of concern are mechanics of testing (calorimeter types and sizes, test cell size and construction, sample atmospheres, etc.) and interpretation of results (definition of ignition, effect of opacity, effect of purely radiant energy, etc.). Some recent developments in statistical design and analysis of experimentation involving arc-image data are provided in references 30 and 31.

The evaluation of ignition characteristics by convective heating is much more complex than evaluation by radiative heating because of the difficulties in accurately determining heat-transmission values and the increased number of test variables that cannot be independently controlled. Nevertheless, a knowledge of the relative effects of different modes of heating is necessary. Significant contributions in this area are described in references 19 and 32 through 34.

2.1 Initiation System

The energy source that provides the stimulus for initiation of the motor ignition process may be electrical, mechanical, or chemical, or a shock wave, a laser beam, or a combination of sources. This energy input is converted by the initiator to heat energy output to ignite the igniter energy release system.

THIS DOCUMENT PROVIDED BY THE ABBOTT AEROSPACE
TECHNICAL LIBRARY
ABBOTTAEROSPACE.COM

2.1.0 Types of Initiation

2.1.0.1 Electroexplosive Devices

The most frequently used method of initiation employs an electroexplosive device commonly referred to as an "initiator" or "squib." In an electroexplosive device (EED), electrically insulated terminals are in contact with, or adjacent to, a composition that reacts chemically when the required energy level is discharged through the terminals. These terminals may be connected by various resistive media (as will be described subsequently), or may be positioned so that a spark discharge can be induced between them. The terminals are housed in confining containers, together with additional deflagrating charges as required for the specific application and design requirements.

Electroexplosive devices can conveniently be placed in one of two categories on the basis of the energy source required for initiation: (1) low-voltage devices are fired by direct application of current from a voltage source usually of 28 volts or less; (2) high-voltage devices require a large potential (e.g., 500 to 2500 volts) to initiate the primary composition. Currently available well-designed EED's provide highly reproducible ignition times of less than 5 msec at recommended firing levels.

2.1.0.2 Through-Bulkhead Devices

To eliminate some of the safety problems associated with electroexplosive devices, a method of initiating solid rocket igniters has been developed in which a detonation shock wave is transmitted from a donor charge through a solid metal interface to an acceptor charge that initiates the deflagration of a heat-producing composition. The metal interface, or bulkhead, normally an integral part of the initiator body, remains intact and thus retains the integrity of the seal. This device can also be used with confined detonating fuses to provide a system of explosive trains capable of achieving essentially simultaneous ignition of multiple motors.

2.1.0.3 Mechanical Devices

Mechanical initiation of igniters is not used extensively. However, occasionally precussion primers, the most common type, have been used to advantage, and a brief discussion of their characteristics is warranted. A percussion primer generally consists of a metal cup into which an impact-sensitive initiating charge, or primer mix, is loaded. The charge is retained in place with a thin disc, and an anvil is inserted so that the impact of a firing pin against the anvil will ignite the entrapped primer mix. The cup can be designed to remain intact, providing a pressure seal against gas flow. To facilitate ignition of the main igniter charge, a boost charge normally is used to supplement the primer output. Charge formulations and specific design details on the priming cup, anvil, and sealing disc are given in references 35 and 36.

THIS DOCUMENT PROVIDED BY THE ABBOTT AEROSPACE
TECHNICAL LIBRARY
ABBOTTAEROSPACE.COM

2.1.0.4 Other Devices

The initiator types described above include those commonly used in operational solid rocket motors. Additional types currently in the developmental and experimental stage appear to have possible applications in ignition systems.

2.1.0.4.1 Laser

Sufficient testing has been done to demonstrate that light energy, through the laser system, can be used to initiate solid rocket igniters. One of the primary problems, that of light direction, has been solved by the use of fiber optics (refs. 37 and 38), but problems of size and weight remain.

2.1.0.4.2 Hypergolic

Certain oxidizers, e.g., chlorine trifluoride, react hypergolically on contact with solid rocket propellants. These oxidizers have been used to initiate pyrogens and sustain combustion of pyrogens containing fuel only, and have found some use as primary motor igniters. The oxidizers usually are injected under pressure into the combustion chamber in liquid or gaseous form.

2.1.0.4.3 Mild Detonator Trains

Mild detonator trains consist of a mixture of detonating (for rapid propagation) and deflagrating (for heat output) charges encased in metal sheaths. Although a separate means of initiation is usually necessary, these trains can be used effectively to transmit initiating energy to otherwise inaccessible areas. The high velocity (12,000 to 25,000 fps) of the detonation wave provides rapid propagation of the ignition energy from the initiating source to the energy release system.

2.1.0.4.4 Thermoelectric Materials

It has been demonstrated (refs. 39 and 40) that it is feasible to replace the conventional bridge-wire-type initiators with those using semiconductors. The prime charge is ignited by the heat induced when a direct current is passed through a junction of dissimilar materials such as *p*-type and *n*-type semiconductors, since both Peltier and Joule heating will occur at the junction. However, when an alternating current is applied only Joule heating will occur, and this alone does not produce enough heat to ignite the charge. This system thus provides a considerable degree of safety against accidental ignition by electromagnetic radiation.

THIS DOCUMENT PROVIDED BY THE ABBOTT AEROSPACE
TECHNICAL LIBRARY
ABBOTTAEROSPACE.COM

2.1.1 Low Voltage Electroexplosive Devices

In the low-voltage EED, initiation is a thermal process in which a small resistive element (bridgewire) is heated electrically to a temperature sufficient to cause deflagration of the material (prime charge) in contact with it. The variables involved are primarily the configuration and characteristics of the header, the bridgewire, and the prime charge. Reduced sensitivity to the heating current has been achieved by increasing the heat loss to header components, distributing the loss of the heat induced in the bridgewire over a larger bridgewire surface area, and using a prime charge having a high ignition temperature.

2.1.1.1 Bridgewire–Prime Charge Design

The resistive element in a low-voltage EED may be attached between the terminals or from a terminal to a conductive ground (e.g., the initiator case). The elements most frequently used are small wires (0.0005 to 0.005 in. in diameter); but thin films, plated bridges, and conductive compositions have been used successfully. By use of small-diameter, high-resistance wires with primer compositions having low ignition temperatures, ignition can be accomplished with the application of as little as 0.100 amp. Conversely, lower resistance larger diameter wires can be used in conjunction with less-heat-sensitive primer charges so that as much as 5 amps are required. Thus, one of the primary problems in low-voltage electroexplosive devices is the establishment of the bridgewire–prime charge design. The solution requires a determination of the extent to which the thermal energy produced from a given input of electrical energy through a bridgewire goes to heating the wire and contacting prime charge or is lost to the leads and other surrounding components. Since a completely rigorous analysis in terms of the power input, nonlinear resistive heating, and three-dimensional heat transfer through materials of varying thermal conductivity is quite complicated, a variety of approaches of varying complexity has evolved.

2.1.1.1.1 Electrothermal Relationships

The following simple empirical equation for determining the threshold ignition energy of a normal lead styphnate charge heated by an imbedded bridgewire of length ℓ and diameter d has proven valid for a rather large range of bridgewire dimensions (ref. 41):

$$E_t = 25 + 450\, d^2 \ell \tag{15}$$

where

E_t = threshold firing energy (50% point), ergs
d = diameter of bridgewire, mils
ℓ = length of the bridgewire, mils

THIS DOCUMENT PROVIDED BY THE ABBOTT AEROSPACE
TECHNICAL LIBRARY
ABBOTTAEROSPACE.COM

The equation assumes the firing energy requirement to be proportional to the bridgewire volume; it does not include provisions for variations in heat loss and is valid only for cases where very rapid heating of the bridgewire is attained. Equation (15) also assumes a constant ignition temperature and includes no consideration for variations in bridgewire materials and their thermal properties. These limitations normally are recognized and evaluated before the equation is used as a basis for design.

A more sophisticated approach for representing the time dependence of the bridgewire temperature as a function of applied power is provided in reference 42. This approach considers the wire bridge as a lumped system and replaces the temperature gradients along the wire and the nonuniform heat losses with mean or nominal values. The thermal behavior of the wire bridge then is described by

$$C_p \frac{d\theta}{dt} + \gamma\theta = P(t) \tag{16}$$

where

C_p = heat capacity of the system, watt-sec/°C
γ = heat loss factor, watts/°C
θ = temperature rise above ambient, °C
$P(t)$ = input power function, watts

C_p includes the product of the mass and specific heat of the wire plus coupled effects caused by heating of the explosive mixture; γ includes heat losses to the explosive mixture and other initiator components and, through conduction, to the terminals. From this basic relationship, equations are developed for specific conditions, as follows:

(1) Thermal time constant

$$\tau = \frac{C_p}{\gamma}, \text{ sec} \tag{17}$$

describes the response of the system to changes in power input.

(2) For adiabatic condition ($\gamma = 0$) or large values of τ,

$$\theta = \frac{\int P(t)\,dt}{C_p} \tag{18}$$

(3) For cooling, after power input is discontinued ($P(t) = 0$),

$$\theta = \theta_o \exp(-t/\tau) \tag{19}$$

THIS DOCUMENT PROVIDED BY THE ABBOTT AEROSPACE
TECHNICAL LIBRARY
ABBOTTAEROSPACE.COM

(4) For steady power input after equilibrium conditions are reached ($d\theta/dt = 0$),

$$\theta = \frac{P(t)}{\gamma} \tag{20}$$

(5) For computing bridgewire temperature on the basis of resistance change,

$$R = R_o(1 + a\theta) \tag{21}$$

where

R = bridgewire resistance, ohms
a = temperature coefficient of resistivity, (ohm/ohm-°C)
R_o = bridgewire resistance at initial temperature, ohms

(6) For determination of γ, based on an experimentally obtained curve of resistance versus power dissipation,

$$\frac{(\Delta R/R_o)}{\Delta P(t)} = \frac{a}{\gamma} \tag{22}$$

The development of further equations that describe the temperature rise as a function of time for constant current, capacitor discharge, and constant voltage firing is also included in reference 42. Additional methods of measurement of electrothermal parameters are described in references 43 through 45.

2.1.1.1.2 Power Density Effects

One approach to experimental characterization of γ for a bridgewire with a given prime charge is based on the postulation that ignition occurs when a certain critical watt density, the value of which varies with wire diameter, is reached at the surface of the bridgewire (ref. 46). Thus, for specific compositions the designer may deal with a factor of input power per unit surface area of the bridgewire. Ideally, watt density is related to the wire diameter by the following equation:

$$\frac{W}{A} = \frac{I^2K}{D^3 2.47} = \frac{E^2\pi D}{K l^2 4} \tag{23}$$

where

W = power, watts
A = surface area of bridgewire, in.^{2}

THIS DOCUMENT PROVIDED BY THE ABBOTT AEROSPACE
TECHNICAL LIBRARY
ABBOTTAEROSPACE.COM

I = current, amp
K = resistivity, ohm-in.
D = bridgewire diameter, in.
E = emf, volts
l = length, in.

The fire point for a particular composition often is established by several experimental shots in which the bridgewire diameter is varied. The igniter designer readily determines whether the selected bridge will comply with the requirements at the specified current or voltage input levels. An example of this type of curve for lead styphnate is shown in figure 4.

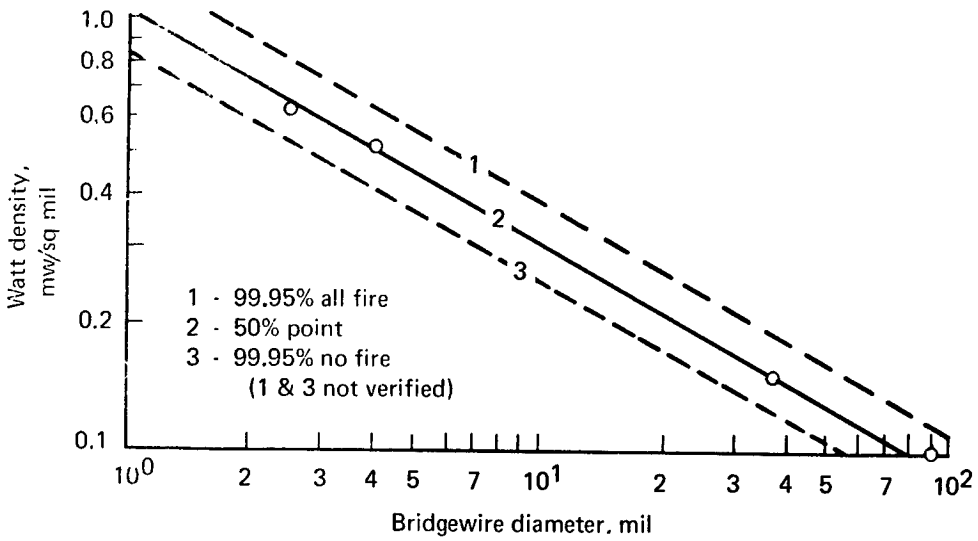

Figure 4.—Watt density graph for lead styphnate ignition charge.

2.1.1.1.3 Heat-Transfer Model

A more comprehensive mathematical model of the heat-transfer functions in the hot-wire initiator is provided in figure 5 (refs. 47 and 48). This analysis accounts for the effect of the ends of the bridgewire connected to posts that remain at ambient and for all the major variables that should be considered in determining the surface temperature of the bead (i.e., thermal properties of wire and prime charge, current, coefficient of resistivity, and contact conductance from wire to prime charge).

The analysis is a finite-element solution of the general heat-transfer differential equation. Using the nomenclature of reference 47 (modified for consistency herein), the equation for the wire is

$$\frac{\partial \theta'}{\partial t} = \alpha' \nabla^2 \theta' + \frac{I^2 J (1 + a' \theta')}{\rho' (A')^2 C' \sigma'} - \frac{P' h}{\rho' A' C'} (\theta' - \theta_S) \tag{24}$$

THIS DOCUMENT PROVIDED BY THE ABBOTT AEROSPACE
TECHNICAL LIBRARY
ABBOTTAEROSPACE.COM

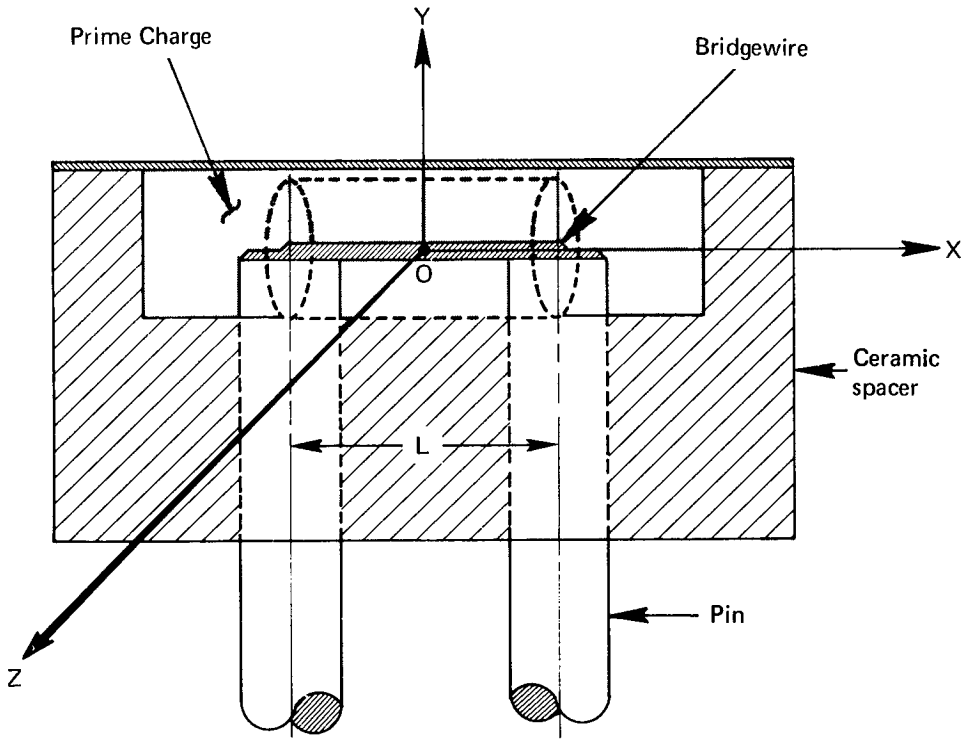

Figure 5.—Model of hot wire initiator (refs. 47 and 48).

and the equation for the prime charge material is

$$\frac{\partial \theta}{\partial t} = \alpha \nabla^2 \theta \tag{25}$$

where

α = temperature coefficient of resistivity, ohm/ohm-°C
A = cross-sectional area, cm^2
C = specific heat of bridgewire, cal/gm-°C
h = film heat-transfer coefficient of the bridgewire prime charge interface, cal/sec-cm^2-°C
I = current, amp
J = 0.239 cal/joule
P = perimeter, cm
α = thermal diffusivity, cm^2/sec
θ = temperature, °C
ρ = density, gm/cm^3
σ = electrical conductivity, mhos/cm
θ_S = θ at $r = r_S$, $x = x$, °C
r = radial coordinate, cm

THIS DOCUMENT PROVIDED BY THE ABBOTT AEROSPACE
TECHNICAL LIBRARY
ABBOTTAEROSPACE.COM

r_s = radius of bridgewire, cm
x = axial coordinate, cm
∇^2 = Laplace operator = $(\partial^2/\partial x^2) + (\partial^2/\partial y^2) + (\partial^2/\partial z^2)$

Primed symbols refer to the bridgewire; umprimed to the prime charge. With the use of an analog computer, these equations are set up and solved for several finite elements of the prime charge and wire. The relationship appears to be even more amenable to solution by use of a digital computer.

The validity and accuracy of this analysis depend on the values for the material properties and the judgment used in setting up the finite geometry. A significant variable that affects the time to ignition is the contact resistance between the wire and prime charge. With the exception of the value given in references 47 and 48, this variable is a most elusive parameter that must be determined experimentally.

2.1.1.2 Prime-Charge Characteristics

To accomplish reliable ignition of the prime charge by the transfer of heat from the bridgewire, the charge is prepared and loaded so that intimate contact between these components is achieved. Since bridgewires have small diameters (0.0005 to 0.005 in.), the prime charge is finely ground and thoroughly blended so that the quantity and composition of the material contacting the bridgewire are uniform. If charge materials are pressed in over a flush mounted bridgewire, they are loaded dry. However, if the bridgewire is attached to extended pins, pressing is not practical because of the potential damage to the bridge. Here, a small amount of binder, e.g., nitrocellulose, and a solvent are added to the blend, forming a paste that may be either applied as a bead to the wire or buttered into a cavity. These compositions are thoroughly dried before the initiator is sealed to ensure that all solvent is completely removed.

Basic considerations in selecting a prime-charge material are its compatibility with the bridgewire and all other components and its capability to perform the required function in the stipulated time. This latter attribute depends on both chemical and physical characteristics. Materials commonly used as prime charges include lead styphnate, lead azide, diazodinitrophenol, and zirconium-ammonium perchlorate. A more comprehensive listing of charge formulations, including percentages of ingredients, is provided in reference 36.

2.1.2 High-Voltage Electroexplosive Devices

2.1.2.1. Exploding Bridgewire Systems

The method of initiation described in section 2.1.1 uses an electrically heated wire as the heat source. To provide greater insensitivity to electrical energy inputs, the use

THIS DOCUMENT PROVIDED BY THE ABBOTT AEROSPACE
TECHNICAL LIBRARY
ABBOTTAEROSPACE.COM

of exploding wires to initiate less sensitive compositions has been implemented in electroexplosive initiators.

In an exploding bridgewire (EBW) initiator, a small wire (1 to 4 mils) attached between two terminals is exploded by the application of a high-voltage discharge. The wire normally is a material of low resistivity, e.g., gold or platinum, that can be vaporized by the rapid application (less than 4 microseconds) of high electrical energies (1 to 2 joules) supplied by a small firing unit specifically designed for the application. Although the mechanism of wire explosions is not completely understood to the extent that there is universal agreement, the explanation provided by Chace (ref. 49) appears to be the most generally accepted.

The size and material of the EBW bridgewire must be such that the bridgewire can be exploded and can efficiently transmit its thermal and mechanical energy to the initiator charge. The wire must also have adequate strength and be chemically compatible with the charge formulation. Investigators (refs. 50 through 57) have determined that gold, silver, copper, aluminum, and platinum wires 0.001 to 0.003 in. in diameter and 0.025 to 0.100 in. long can be satisfactorily used to detonate secondary explosives, e.g., pentaerythritol tetranitrate (PETN) and cyclotrimethylene trinitramine (RDX) or to ignite encapsulated pyrotechnics. The minimum stored energy for the explosion of this size wire occurs at approximately 1 μF, the commonly used capacitor value (ref. 58).

Design of the body and closure is similar to that of a conventional electric initiator. However, because of the high voltages involved, special attention is given to insulation against voltage breakdown between the terminal pins and other metal components of the initiator.

2.1.2.2 Voltage-Blocking Devices

The above features in an EBW add greatly to safety from accidental electromagnetic radiation ignition, but still leave the EBW susceptible to dudding by the bridgewire melting without firing. Voltage-blocking devices are used to prevent this dudding. Below certain specified voltages, these devices have sufficiently high resistance to block the flow of current. The voltage-blocking devices may be incorporated and sealed directly in the header or included as a separate circuit component. Methods used successfully include spark gaps in the header terminals (ref. 59) and junctions separated with a controlled thickness of nonconductors such as a film of aluminum oxide (ref. 60). Diodes (ref. 61) are also used in thermal initiators when it is desired to limit the firing voltage to very high levels (e.g., 500 volts).

2.1.3 Through-Bulkhead Initiators

As is frequently the case in the ignition field, the application of a through-bulkhead initiator (TBI) has preceded a comprehensive theoretical explanation of the behavior

THIS DOCUMENT PROVIDED BY THE ABBOTT AEROSPACE
TECHNICAL LIBRARY
ABBOTTAEROSPACE.COM

of the components involved. However, some success has been reported in relating the detonation-to-deflagration transition to the detonating velocity and resulting shock pressure.

A simplified illustration of a TBI is provided in figure 6.

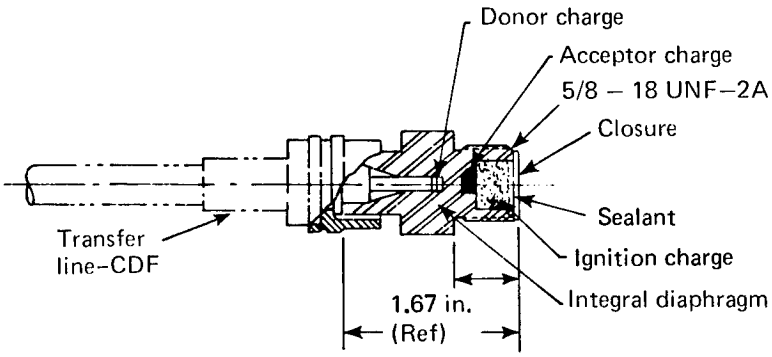

Figure 6.—Through-bulkhead initiator.

The transfer line shown in figure 6 (a confined detonating fuse (CDF)) is a typical method of initiation. A small core of detonating composition (2 to 12 grain/foot) is enclosed in metal and sometimes covered with a plastic tube. The composition is usually initiated remotely by conventional detonators, but direct initiation by electrical or mechanical detonators can also be used. This detonation force initiates the donor charge, which in turn transmits a shock wave through an integral diaphragm in the housing and detonates the acceptor charge on the internal side of the igniter. The critical problem is the transmission of the shock wave through the diaphragm without adversely affecting its structural integrity or that of the surrounding structure.

A transition from detonation of the acceptor charge to deflagration of the ignition charge must then be accomplished. A comprehensive discussion of the design principles and practices involved in making this transition is provided in reference 62.

2.1.4 Initiator Output Charges

Initiators often have a separate output charge whose function is to respond to the stimulus of the initiator prime and provide the output energy in the form of heat required to ignite the main igniter charge; consequently, available energy per unit weight is of primary concern. The most effective materials for the application are metal-oxidant pyrotechnic formulations; many combinations have been used successfully. Some typical examples of formulations used for initiator output charges are shown in table II. References 46 and 63 contain more comprehensive listings of formulations and reaction products. The properties of materials used in pyrotechnic compositions are given in reference 64.

THIS DOCUMENT PROVIDED BY THE ABBOTT AEROSPACE
TECHNICAL LIBRARY
ABBOTTAEROSPACE.COM

Table II.—Typical Formulations for Output Charges

Application/Designation	Fuel	Oxidants	Binders
Mk 247, Mk 265 (igniters) XM-6 & XM-8 (EBW)	Boron, 23.7%	KNO_3, 70.7%	Laminac, 5.6%
MB-1 (500-V initiator)	Zirconium, 66.3%	NH_4ClO_4, 32.7%	Nitrocellulose, 1.0%
FA-878 (ign. elements Mk 10, Mk 11, Mk 13, Mk 17)	Zirconium, 40%	$BaNO_3$, 20% PbO_2, 20% PETN, 20%	
M2 squib	$Pb(SCN)_2$, 32% Charcoal, 18%	$KClO_3$, 40%	Egyptian lacquer, 10%
NOTS Model 39	Magnesium, 60%	Polytetrafluoro-ethylene, 40%	

The pressure produced by a given charge weight in the volume involved is also a critical design consideration because (1) the housing components must contain the combustion products without rupturing and (2) the ignition energy requirements of the main igniter charge vary with pressure. Normally, charge materials are more readily ignited if the pressure is increased significantly above ambient. Thus, the selection of the initiator main charge formulation may depend on the desired balance between energy and pressure outputs. A method for determining the maximum pressure expected when a given weight of ignition material is fired in a chamber of a given free volume is described below.

The equation of state for the gases produced by the pyrotechnic, based on the ideal gas laws, can be expressed as

$$P = \frac{\delta}{\delta - \Delta} \Delta \lambda G + P_A \tag{26}$$

where

P = pressure in combustion chamber at time t, $lb_f/in.^2$
δ = density of charge material, $lb_m/in.^3$
Δ = loading density = C/V, $lb_m/in.^3$ (26a)
C = original mass of charge, lb_m
V = design volume of combustion chamber, $in.^3$
λ = RT/M—"effective force" (energy), $in.\text{-}lb_f/lb_m$ (26b)
R = universal gas content, $in.\text{-}lb_f/°R\text{-}mol$
T = flame temperature, °R
M = weighted mean molecular weight of gaseous products, lb_m/mol
G = fraction of original charge mass consumed by time t, dimensionless
P_A = atmospheric pressure, $lb_f/in.^2$

THIS DOCUMENT PROVIDED BY THE ABBOTT AEROSPACE
TECHNICAL LIBRARY
ABBOTTAEROSPACE.COM

Assuming that maximum pressure occurs when all the initiator charge material is consumed, G becomes 1, and the equation may be expressed as

$$P_{max} = \frac{\delta \Delta \lambda}{(\delta - \Delta)} + P_A = \frac{\lambda}{(1/\Delta) - (1/\delta)} + P_A \qquad (27)$$

The effective force λ can be calculated if the data are available on the percentage of gas in the combustion products of the composition. However, it is frequently easier and more accurate to determine the value experimentally by burning a given amount of material in a closed test chamber and measuring the maximum pressure. The approximate effective force values for some common pyrotechnics and propellants are given below:

Material	Impetus, $ft\text{-}lb_f/lb_m$
Black powder	100,000
Pistol powder	400,000
Boron/potassium nitrate	120,000
Double-base smokeless (M2)	360,000
Composite (ammonium perchlorate)	420,000

Other characteristics considered in the selection of the initiator output charge are duration of the burning, flame distribution of the output, quantity and distribution of hot particles, and the brisance (shock force) induced. The requirements in these areas depend on ignitability of the igniter charge, the location of the initiator with respect to other components in the ignition train, and the limitations on ignition shock imposed on the rocket motor.

2.1.5 Safety Features

The initiator is designed specifically to start motor operation, and therefore protection against misfire or inadvertent ignition is extremely important. The primary hazards to electrical initiators are (1) induced current from electromagnetic radiation, (2) static electrical discharge, (3) spurious signal pickup, (4) heat, and (5) vibration and shock. Discussions regarding heat, vibration, and shock are included in the treatments of environmental conditions.

THIS DOCUMENT PROVIDED BY THE ABBOTT AEROSPACE
TECHNICAL LIBRARY
ABBOTTAEROSPACE.COM

2.1.5.1 Safe/Arm Systems

As safety measures, many systems require that the initiators use safe/arm (S/A) systems, exploding bridgewires requiring specific energy modes, or voltage-blocking devices. Because the latter two are designed so that they are not fired by application of voltages available from sources other than the igniter firing unit, they do not require out-of-line safe/arm features. However, for low-voltage initiators, safety requirements frequently dictate some provision for ensuring against premature igniter firing if an activating energy is inadvertently applied to the firing circuit.

As applied to rocket motor igniters, the term safe/arm is commonly used to indicate a mechanism that in the SAFE condition physically prevents the initiating charge from propagating to the energy release system. When the mechanism is placed in the ARM condition, ignition can be reliably and reproducibly propagated to the energy release system. Often S/A mechanisms incorporate provisions for interrupting the electrical circuit concurrently with the mechanical operation.

The SAFE condition normally is obtained either by providing a barrier that can be inserted between successive elements of the ignition train or by displacing elements of the train so that they are misaligned sufficiently to prevent propagation. The movement in either case may be rotary or linear, the choice usually depending on the actuating source and the space limitations. Most mechanisms are operated directly by manual force or remotely by electrical motor or solenoid. However, mechanisms that receive their arming impetus from launch loads or from environmental conditions such as acceleration and altitude have been used successfully.

2.1.5.2 Sensitivity to Firing Stimuli

The sensitivity of an electroexplosive device to electrical energy flowing through the firing circuit must be such that it will operate within restrictive upper and lower limits. These requirements are stipulated most frequently by imposing "no-fire" limits on the energy that will fire the device. No-fire limits may be expressed in terms of a minimum current, power, voltage, or capacitance that can be applied to the circuit without firing the unit. Typical no-fire requirements are 1 ampere-1 watt for low-voltage EED, 250 volts ac where voltage-blocking devices are used, and 25,000 volts from a 500-picofarad capacitor for exploding bridgewire systems. In some instances, to ensure safety of the initiator, each unit is tested. In these cases, adequate tests must be conducted to ensure that no degradation in performance results. All-fire limits, expressed in similar terms, define the energy required to consistently fire the EED, based on the minimum energy expected to be available under the most adverse conditions. Typical energy sources include batteries (3 to 12 volts dc), auxiliary power units (3 volts dc minimum), aircraft power (28 volts dc), capacitor discharge (2000 volts from a 1.0-microfarad capacitor), and ground support equipment (120

THIS DOCUMENT PROVIDED BY THE ABBOTT AEROSPACE
TECHNICAL LIBRARY
ABBOTTAEROSPACE.COM

to 500 volts ac). The energy source used to evaluate the initiator must be consistent with the source intended for use in actual application.

2.1.5.3 Sensitivity to Induced Current

During transmission, radio and related radio-frequency wave transmitters, e.g., radar and television, create a field of electromagnetic energy in the air surrounding their antennas. The lead wires to and in an initiator, as well as any attached vehicular structure, can act as a receiving antenna. If the configuration of the inductive leads is just right, and if the transmitter is close enough, this antenna may pick up enough current to heat the bridgewire and ignite the primer mix. Stray electromagnetic radiation also increases the breakdown of insulation resistance between bridgewires and between bridgewires and the case; the reduced effectiveness of the insulation at these points can lead to inadvertent ignition. The increasing magnitude of power radiated from communication and radar equipment has led to a growing concern over the potential hazard from stray radiation.

Three methods are used to protect electroexplosive devices from this hazard. One approach is to enclose the complete device, including all enclosed circuitry and switching and arming mechanisms, in a conductive shield. Another is to shield compartments and cables comprising the firing circuit. A third method is to insert a radio-frequency interference filter between the transmission line and the devices. Guides to applications and references to more extensive data regarding these methods are provided in NAVWEPS OD-30393 (ref. 65); section 2.1.4.3 describes briefly the problems in testing for sensitivity to induced current.

2.1.5.4 Sensitivity to Electrostatic Discharge

If electrostatic potentials become high enough to cause arcing from the bridgewire terminal through the initiator charge to the case or another bridgewire, the heat-sensitive primer charges may be ignited by this spark, or the bridgewire may be heated by a current flow and the primer mix initiated. These electrostatic hazards are minimized or eliminated through the combined use of selective insulation techniques, electrically conductive bypass features, external bleed mechanisms, and non-conductive ignition materials. Care is taken, however, to see that features incorporated to reduce this hazard do not result in increased susceptibility to accidental ignition as a consequence of induced currents or spurious signal pickup. If grounded or common circuits are used with other electrical system components, the stray or transient currents resulting from the operation of these components may create enough current flow through the initiators to cause ignition.

2.1.5.5 Delay Systems

In some motor systems, the power source that provides the electrical input to fire the initiator is located in a vehicular structure from which the motor is separated

THIS DOCUMENT PROVIDED BY THE ABBOTT AEROSPACE
TECHNICAL LIBRARY
ABBOTTAEROSPACE.COM

on ignition. To prevent damage to the motor or to the separated structure, a slight delay before motor operation is desirable. A delay train is incorporated as an integral part of the initiator to enable this delay. The electrical input ignites a prime charge that in turn ignites the pyrotechnic delay column. The burning of the column provides the desired delay time and subsequently ignites the initiator output charge. Motor ignition then proceeds normally, with the rocket motor safely removed from other structures.

The primary problems in developing pyrotechnic delay columns have involved the elimination of the effects of the reaction products on the burning rate of the column. The compositions must be insensitive to pressure, be vented, have gasless products of combustion, or be some optimum combination of these. For deep space applications, venting is not desirable and the choice reduces to the so-called pressure insensitive or gasless compositions. These materials have been successful in meeting the needs to date.

2.2 Energy Release System

2.2.1 Basic Requirements

The energy release system as used herein encompasses that portion of the solid rocket igniter that provides the heat efflux necessary to ignite the propellant and raise it to a self-sustaining combustion level. Rapid energy release rates that provide high energy flux at the propellant surface are usually required to meet the time limits imposed. Attempts to evolve scientifically sound methods for computing the total quantity and rate of energy necessary to accomplish optimum ignition have been at least partially successful. Several techniques of varying complexity and accuracy have been developed. The currently used techniques are discussed in detail in section 3.2.1.1.

One of the major advances in ignition technology has been the development of reasonably accurate methods for computing the rate of pressurization of a motor during the ignition phase. Thus, the effect of igniter and motor mass flow inputs on rates of thrust onset, pressure peaks, and grain stresses can be evaluated from the relationships described in section 3.2.1.2.

A wide variety of igniter "types" has been developed. However, with few exceptions, existing operational rocket motors use pyrogen or pyrotechnic igniters or some variation or combination of them. Consequently, the design of these two types and of hypergolics is discussed in separate sections below. Other minor types are described in the final section, and references to more detailed information are provided.

THIS DOCUMENT PROVIDED BY THE ABBOTT AEROSPACE
TECHNICAL LIBRARY
ABBOTTAEROSPACE.COM

2.2.2 Pyrogens

The pyrogen is basically a small rocket motor used to ignite a larger rocket motor. A typical example is shown in figure 7. The boost charge, usually a readily ignited

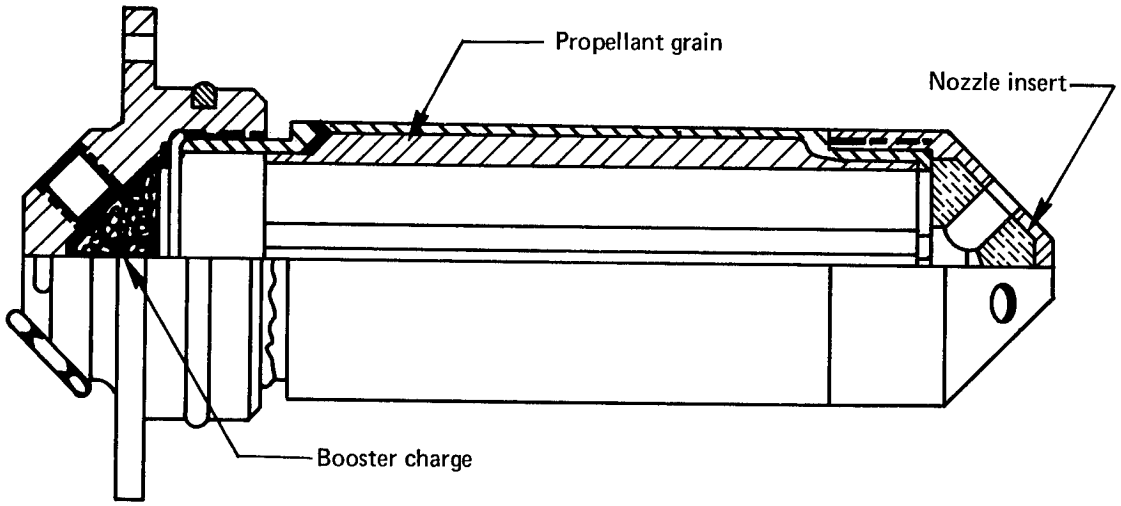

Figure 7.—Pyrogen igniter.

pelleted pyrotechnic, propagates the ignition train from the initiator to the pyrogen propellant grain. In some small pyrogens, this charge is eliminated and ignition is accomplished directly from the initiator. Reaction products from the pyrogen grain are expelled through the pyrogen nozzle and impinge on the surface of the motor propellant. The pyrogen chamber and nozzle must be structurally adequate to contain the combustion products during igniter operation, after which they may be either retained or consumed. In larger motors, igniters of this type are sometimes mounted externally and fired in through the nozzle.

A major objective in the design of the pyrogen igniter is to obtain the necessary energy output while keeping the igniter as small and as light in weight as possible. Occasionally, the designer is restricted to using a pyrogen propellant that is the same as the motor propellant. When the choice is not so restricted, the designer considers carefully the ballistic characteristics of the many available propellants in relation to particular needs.

2.2.3 Pelleted Pyrotechnics

In the broadest sense, the term pyrotechnic describes a large variety of igniter types. For purposes of this monograph, however, this group of igniters is limited to pyrotechnics in the form of pellets or large grains. Examples of these types are shown in figures 8 and 9.

THIS DOCUMENT PROVIDED BY THE ABBOTT AEROSPACE
TECHNICAL LIBRARY
ABBOTTAEROSPACE.COM

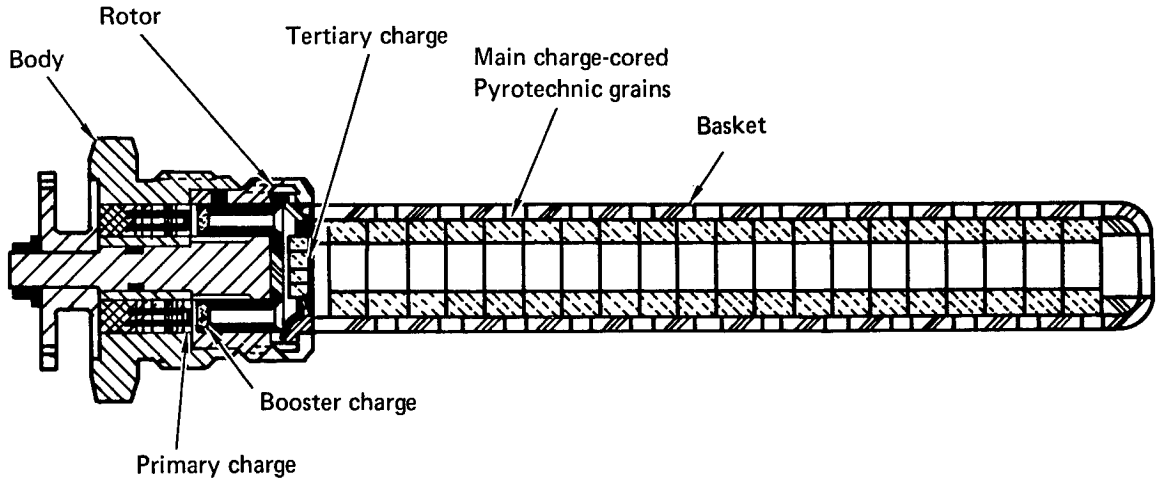

Figure 8.—Pyrodyne igniter.

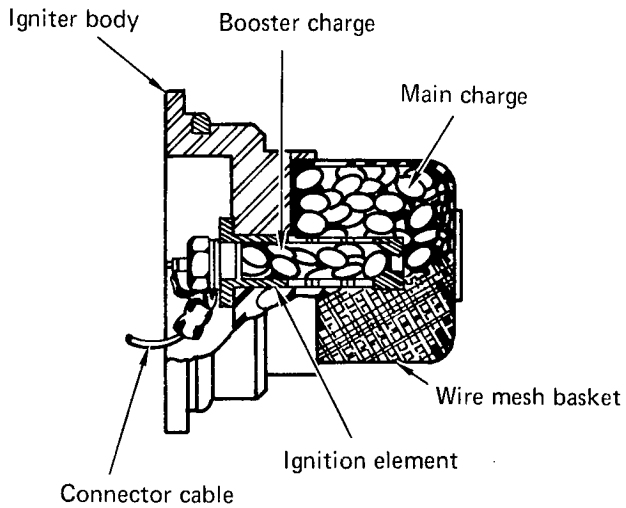

Figure 9.—Pelleted pyrotechnic.

In the pelleted pyrotechnic, the pellets are retained for the bulk of their burning time by either a wire mesh or perforated metal basket, where burning takes place with only the form, composition, quantity, and density of the pellets controlling the energy output rate. When discrete pellets of controlled dimensions are used, a specific ratio of burning surface to chamber vent area is maintained to provide greater control on the ballistic performance of the igniter.

THIS DOCUMENT PROVIDED BY THE ABBOTT AEROSPACE
TECHNICAL LIBRARY
ABBOTTAEROSPACE.COM

2.2.4 Hypergolic

The hypergolic ignition technique consists of applying to a propellant surface a liquid that reacts exothermically when the propellant is contacted. Although not currently used in operational systems, hypergolics have sufficient potential for multiple restart ignition to warrant a brief review of current design practices. The results of extensive investigations of hypergolic ignition are reported in reference 66; the material included herein is derived largely from this source.

Chlorine trifluoride in liquid form is the hypergolic reagent used for most propellants. The most effective ignition is achieved when the liquid is injected into the motor port through a nozzle designed to provide maximum dispersion and drop size reduction, but with the forcing pressure as low as can be used and still achieve the desired diffusion. When these objectives are met and impingement is directed to the forward half of the motor port, ignition delay time $\tau_{10\%}$ is a direct function of the hypergolic oxidizer mass flow rate $\dot{m}_o$.

The most useful scaling parameters are the igniter flow and the igniter area. The igniter flow parameter $\dot{m}_o/A_{1gn}$ is the mass flow rate of the oxidizer $\dot{m}_o$ per unit area of propellant port surface initially wetted by the hypergolic A_{1gn}. Optimum values are generally in the range 0.0014 to 0.0030 lb/sec-in.^{2}. The igniter area parameter is the ratio of A_{1gn} to the total surface area of the motor propellant port; minimum values of 0.3 are commonly required to give satisfactory ignition.

As the environmental pressure within a rocket motor is reduced below normal atmospheric pressure, the time required to obtain ignition with liquid hypergolic oxidizers is increased. At pressures below 2 to 3 psia, ignition cannot be achieved with chlorine trifluoride. Therefore, where feasible the motor is sealed to contain a pressure of at least one atmosphere. For applications where this is not feasible, e.g., on pulse or restart motors, a hypergolic oxidizer mixture containing one oxidizer with a high vapor pressure that will locally pressurize the motor above the minimum ignition pressure is used. A mixture of perchlorylfluoride and chlorine trifluoride has been used successfully. The mixture ratios that will produce the minimum ignition time must be optimized for the particular system involved. Because the effect of pressure on ignition time increases as the temperature is decreased, this optimization is conducted over the entire anticipated operational temperature range.

Additional details on developmental design practices are available in references 24, 27, 38, 66, 67, and 68. Related techniques for obtaining multiple ignition restarts are augmented hypergolic systems (ref. 69) and hypersolid systems (refs. 70 and 71).

THIS DOCUMENT PROVIDED BY THE ABBOTT AEROSPACE
TECHNICAL LIBRARY
ABBOTTAEROSPACE.COM

2.2.5 Minor Types

2.2.5.1 Films and Coatings

Conductive film igniters are thin conductive-pyrotechnic films applied directly to the propellant surface. Details on the development of this igniter are contained in references 72 through 74. Pyromesh igniters, which have coatings applied over consumable mesh support structures, are described in references 75 through 77.

Both of the above igniters are under patent secrecy order, but details of the methods are available to those qualifying under Permit A, Title 35, United States Code (1952) sections 181-188.

2.2.5.2 Jelly Roll

The jelly roll igniter consists of a metal-oxidant composition evenly coated on one side of a rectangular base sheet rolled to form a cylinder-like igniter. The squib is assembled inside the cylinder and the entire unit is loaded into the motor grain cavity. The burning characteristics of the igniter are primarily related to the ratio of fuel to oxidizer, the amount of binder used, and the degree of confinement (ref. 63).

2.2.5.3 Ignition Cord

Pyrocore, a duPont development, is a small-diameter, continuous metal tube containing a core of a detonating and heat-producing composition. The material, supplied in sizes from 0.051 to 0.105 in. in diameter, resembles metal solder wire in appearance and pliability. When initiated from the end by a small electric- or percussion-type detonator, detonation proceeds linearly at an extremely rapid rate ranging from 12,000 to 21,000 fps. Radial energy output is sufficient to ignite other pyrotechnics or to directly ignite certain readily ignitable propellants (refs. 78 through 82).

2.2.6 Igniter Location

The most common location for the igniter is in the forward end of the motor, with the exhaust products flowing down the center port. This arrangement provides efficient utilization of energy from the igniter and from ignited portions of the grain because the exhaust flow is over the unignited portion of the propellant. This flow promotes rapid flame propagation and consequently shorter ignition time.

Where there is no center port in the propellant grain, or where the forward end is inaccessible for required connections or operations, the igniter must be mounted in side

THIS DOCUMENT PROVIDED BY THE ABBOTT AEROSPACE
TECHNICAL LIBRARY
ABBOTTAEROSPACE.COM

or aft locations. This usually increases the complexities of the energy release system design because (1) the possible locations for mounting the igniter are limited in number and often difficult to reach and (2) when propellant ignition is achieved, the hardware and mounting for the igniter must be promptly and safely disposed of or consumed, or must remain intact without affecting ballistic performance.

In some instances igniters are mounted external to the motor within the nozzle exit cone. This location introduces additional factors that influence the pressure transient: (1) igniter exhaust penetration into the motor port, and (2) the effective nozzle throat area. The penetration affects the rate of pressure buildup with design values of penetration ranging from 30 to 70 percent of the motor port volume. The effective nozzle throat area A_e, the annular area between the igniter and the motor nozzle exit cone, is normally expressed as a ratio to the motor nozzle throat area, $\varepsilon = A_e/A_t$. Values of ε in the range 1.2 to 1.8 have proven to give effective penetration depths without causing motor overpressurization. An analytical model for aft end ignition is provided in references 83 and 84.

When large motors using aft-end ignition are test fired vertically with the nozzle up, the design of an igniter retention-release device is required. Systems used successfully for these motors are described in references 85 and 86.

2.2.7 Restart Systems

One of the major problems in development of multipulse solid rocket motors is reignition of the subsequent stages. Since the motors themselves are not yet operational, none of the ignition techniques developed can be described as "state of the art," nor can the design features be considered as recommended practices. However, a brief review of experimental techniques reported in the literature is desirable.

2.2.7.1 Programmed Restarts

A method for achieving ignition of end-burning pulses is described in reference 87. Another method, a variation of the conductive film igniter (sec. 2.2.5.1), is described in reference 88. A subsequent version of this igniter (ref. 89) uses a plated circuit on a Mylar sheet for conducting the firing current. Use of the Pyromesh igniter is a third approach (ref. 76).

2.2.7.2 Demand Restarts

The use of pyrogen igniters that are individually ignited on demand for ignition of subsequent motor pulses is described in reference 90. Multiple pyrogens cartridge-loaded

THIS DOCUMENT PROVIDED BY THE ABBOTT AEROSPACE
TECHNICAL LIBRARY
ABBOTTAEROSPACE.COM

into a common chamber and exhausting into the motor chamber through a common nozzle have also been used successfully (ref. 91).

Hypergolics have the best potential application for multiple demand restarts if the low-pressure ignition problem can be counteracted. A hypergolic innovation that shows promise is the use of liquid hypergolic with a pyrogen containing a solid grain of fuel only (ref. 69). Thus, the pyrogen provides hot, pressurizing ignition gases while the hypergolic oxidizing liquid is being injected, but stops burning when the flow is discontinued.

2.3 Hardware

The hardware associated with solid rocket igniters includes the structural and inert components that retain the initiation system and the energy release system in a coherent assembly, contain the combustion products as required to produce consistent performance, and provide the means for mounting the igniter in or to the motor. As each of the previously described advances in initiation and energy release systems has been developed, there has been a concurrent need for improvements in hardware components.

2.3.1 Initiation System

Electroexplosive devices used in initiation systems can be classed in two general types on the basis of physical construction. Where structural requirements are not critical, the terminals or electrical leads are sealed in a plastic or rubber plug that is inserted in a drawn case of thin metal or plastic. Initiators of this type are normally located within the igniter, and electrical leads are attached to separate feedthrough terminals or lead out of the nozzle. Where the initiator must perform as a structural member of a pressure vessel, terminals or leads are sealed in a metal housing with a high-dielectric material, e.g., a fused glass or ceramic, capable of withstanding the temperature and pressure of the internal combustion reactions during motor operation.

Historically, the first solid rocket igniters were of the "powder can" type in which the explosive or pyrotechnic charge was enclosed in a canister or plastic case that ruptured when the igniter fired. For this igniter, the first type of EED described above, referred to as a squib, was used. These squibs used copper wire leads extending through a rubber plug that was inserted in a copper, brass, or aluminum cup containing the pyrotechnic charge. The charge was retained in place by crimping the cup. Subsequently glass-to-metal hermetic seals were developed, replacing the rubber plugs. These seals were soldered into the charge-cup, thus providing more complete protection against moisture and the effects of long storage periods.

The second type of EED was developed to meet the safety demands for an "insertable" initiator that could be shipped separately from the motor and inserted at subsequent

THIS DOCUMENT PROVIDED BY THE ABBOTT AEROSPACE
TECHNICAL LIBRARY
ABBOTTAEROSPACE.COM

system assembly points. This second type also provides better support for a controlled directed output of combustion products. Since this type of initiator forms a closure for the motor, the terminals or leads for the electrical circuit must be sealed in the initiator housing by an electrically insulating material, usually glass or ceramic, that is capable of withstanding internal motor temperatures and pressures for the required time. Glass insulation, sealed to metal components, e.g., B1113 steel or iron-nickel-cobalt alloys, by an oxidized bond or compression bond achieved during the fusion process, has good strength up to temperatures of 700° to 900° F. For higher temperatures (2500° to 3500° F), ceramic insulators are brazed to the metal components.

The direction of output is controlled by weakening a section of the initiator. The weakened section is usually opposite the sealed end, but specialized designs can be vented radially. Weakening is accomplished by coining a closure, forming a concave closure, or nozzling with a perforated retainer. Steel closures can be coined so that when welded to the body they petal outward and are retained, thus providing minimal amounts of ejecta. Lead closures can be consumed or melted and ejected in the output as minute molten particles, thus effectively eliminating large metal fragments.

The method of closure is dependent on requirements resulting from application of the device. The crimped closure with an adhesive bead applied under the crimp and a sealant overcoat is probably the least expensive and has the lowest rejection rate. The closure is watertight but is not hermetic and is not used where sealing under hard vacuum conditions is required. After extensive investigations (ref. 92), a medium castor-oil-modified alkyd resin base has been recommended as an EED sealant. Either projection, heliarc, or stitch welding is used for hermetically sealing closures if the materials are weldable. Soldering may be required where the closure is fabricated from materials such as tin and lead (ref. 93).

2.3.2 Energy Release System

As previously discussed, early "powder can" igniters simply had a pyrotechnic charge enclosed in a sealed container. Thus, the container was virtually the only hardware involved. These subsequently gave way to igniters with more controlled energy output rates, e.g., the pelleted pyrotechnic and the pyrogen. The hardware for these igniters includes two essential parts—the adapter and the chamber.

2.3.2.1 Adapters

An adapter is the component that mates the igniter with the motor case and provides the structure that connects and positions the igniter chamber and initiator. Since the adapter must contain the motor combustion products, usually at high pressure and temperature, the use of high quality steels (e.g., type 4130 or 17-4PH) or titanium may be

THIS DOCUMENT PROVIDED BY THE ABBOTT AEROSPACE
TECHNICAL LIBRARY
ABBOTTAEROSPACE.COM

necessary. However, cost and weight savings occasionally are realized by using a lightweight insulating material on the internal side of the adapter, thus reducing the adapter temperature and, consequently, the thickness required to contain motor pressure. Suitable insulating materials are phenolic plastics filled with asbestos or glass fibers.

The adapter is the key component for interfacing with the rocket motor case. The adapter must mate with the igniter boss provided, must be attached and sealed in a manner that will withstand motor operating pressures and temperatures, and must provide for any required orientation with respect to other motor (internal or external) or system components. If radial orientation is not required, threaded closures are most commonly used for medium to small igniters. Otherwise, the adapter is attached with keyed systems, e.g., snap rings, bolts, or indexed threads. To prevent gas leakage, the mating joint is sealed, usually with an O-ring or a metallic gasket. For threaded closures, lockwires or thread sealants are used to prevent loosening caused by vibration during transportation, storage, or operation.

2.3.2.2 Chambers

The chamber consists of the components that contain and provide structural support for the intermediate and main igniter charges. The earlier powder-can igniter chambers suffered from very short durations, lack of sustained input to localized propellant surface areas, and inefficient ignition of the main charge.

After the advent of pelleted forms of pyrotechnic charges, chambers were made of wire mesh or perforated metal, which retained the pellets within the chamber during a major portion of their burning. The openings, covered with plastic or rubber dip coatings, or with thin tape that ruptured or burned through at low pressures, assured complete ignition of the pellets and gave a more sustained heat input to the propellant surface being ignited.

To obtain the improved control of igniter ballistic performance necessary to meet more exacting motor ignition requirements, it is desirable to maintain a controlled operating pressure within the igniter chamber. This controlled operating pressure requires that a consistent ratio of output charge burning surface to chamber vent area be maintained. With pyrotechnic charges, this ratio is maintained by the use of a specific number of pellets of controlled dimensions in conjunction with chambers having a specific quantity and size of vent holes. The chambers generally are made of steel or fiber-reinforced plastic and lined with a plastic film to prevent pellet breakage and attrition. For pyrogen igniters, the chambers are designed to contain the igniter operating pressure for the duration of operation, as in a rocket motor design. Because pyrogen igniter ballistics are more reproducible than pyrotechnics, pyrogen chamber materials, properties, and dimensions can be designed with greater precision. Again, the primary materials are steel or fiber-reinforced plastics.

THIS DOCUMENT PROVIDED BY THE ABBOTT AEROSPACE
TECHNICAL LIBRARY
ABBOTTAEROSPACE.COM

Any necessary openings in the pyrogen chamber (e.g., nozzle ports) are sealed so that the propellant grain will not be affected by moisture and other contaminants. The type of seal used—O-ring, gasket, welded closure, etc.—depends on the nature of the opening and the requirements for the seal.

The pelleted igniters are normally less than 0.1 second duration and are vented through the steel chamber with drilled holes or perforations serving as the "nozzles." However, pyrogen igniters are of longer duration and may require close control of ballistic performance; this necessitates the use of nozzle inserts capable of withstanding the flow from the igniters without eroding to the extent that would alter nozzle performance significantly.

For pyrogens mounted in the forward head, nozzles canted toward the propellant surface provide significantly higher heat flux to the propellant, and consequently more positive ignition. The cant angle is selected as a compromise between maximum heat input and minimum propellant erosion. However, for igniters mounted aft and firing into the motor through the nozzle, it is more important that the igniter efflux be injected deeply into the motor port. A single center nozzle contoured to provide maximum penetration is preferred.

2.4 Design Proof Testing

2.4.1 Initiators

Proof testing of initiators involves two basic areas of evaluation: (1) determination of the energy inputs necessary for initiation, and (2) determination of the energy output produced following initiation. The first area includes tests to establish electrical sensitivity to direct application of firing energy and susceptibility to induced currents and electrostatic hazards. The second area involves measurements of the quantity and rate of pressure and energy produced, as well as determination of the level of brisance or other potentially damaging effects.

2.4.1.1 Firing Sensitivity

"No-fire" limits and "all-fire" limits, as requirements, for firing sensitivity, were discussed in section 2.1.5.2. Determination of firing energy sensitivity limits tends to be an expensive test item, because it is a destructive test evaluated by attributes. However, some statistical techniques provide improved test efficiency. The most frequently used is the Bruceton Staircase Method (ref. 94), the test variable being closely controlled constant energy levels applied at discrete intervals. This method provides a relatively accurate estimate of the mean 50 percent firing energy; it is simple to perform, and the statistical calculations are straightforward. However, the Bruceton Staircase Method provides a rather poor, usually low, estimate of the standard deviation unless large samples (>200) are used (ref. 95). The Probit Analysis (ref. 94) provides a more accurate estimate of the extremes, but a poorer estimate of the mean. The statistical technique described in

THIS DOCUMENT PROVIDED BY THE ABBOTT AEROSPACE
TECHNICAL LIBRARY
ABBOTTAEROSPACE.COM

reference 30, although developed for application to arc-image ignitability data, may also prove to be valuable for determining electrical sensitivity when presented and used in a more simplified form.

In addition to the safety limits defined above, the effect of variations in input stimulus on functioning delay time must be known or determined. The time required to achieve ignition is an inverse function of the energy level applied. If the current flowing through the bridgewire is only slightly above the minimum all-fire current as described above, the time required for initiation may be significantly greater than the required functioning time. Conversely, extremely high rates of energy input may cause the bridgewire to break in so short a time that the total heat input is insufficient to achieve ignition. Consequently, it is important that EED be characterized by defining a minimum input stimulus (e.g., a minimum recommended firing current) necessary to achieve rapid, positive ignition of the prime charge.

2.4.1.2 Bridge Resistance

To ensure that electrical elements of EED are intact, measurement of the bridge resistance is desirable. Wire bridge devices are usually tested with a constant current impulse in which the current is limited to a very low value that is safely below the minimum firing energy level, usually less than 0.010 ampere. For evaluating initiators incorporating spark gaps or voltage-blocking devices, test equipment producing a high-voltage discharge is used with the current limited to very low values through the use of current-limiting resistors.

2.4.1.3 Induced Current Sensitivity

Adequate testing of initiators to assess their susceptibility to accidental ignition from a current induced through electromagnetic radiation has proven to be difficult. The most satisfactory results have been obtained where actual conditions to be encountered in end-item applications were closely simulated. The Naval Weapons Laboratory provides a facility for studying the effects aboard ships and aircraft. However, a completely comprehensive test would require evaluation under all conditions including intermediate assembly points, transportation in the vicinity of radar equipment, storage, removal to the launching site, testing, and all sequences through to final firing. The facilities involved must not only have the capability of creating the necessary radiation field intensity and frequency, but must be able to determine the effect of the field on an EED. Since go/no-go testing under these conditions would be prohibitively expensive, detecting devices that provide a measurement of the induced current have been developed for use with simulated EED (ref. 96).

The alternative to the above is to determine the effectiveness of the radiation protection by testing or analysis of the components. Thus, the effectiveness of cable shielding, enclosure shielding, and filters is determined, and the current anticipated to be induced

THIS DOCUMENT PROVIDED BY THE ABBOTT AEROSPACE
TECHNICAL LIBRARY
ABBOTTAEROSPACE.COM

in the system by a given radar field is computed. The computed current is then compared with the current required to fire the EED, based on EED predetermined sensitivity to current flow.

2.4.1.4 Electrostatic Discharge Sensitivity

The sensitivity of an initiator to accidental ignition by an electrostatic discharge is evaluated by determining the capability of mutually insulated electrical conductors to withstand a minimum applied voltage at a given capacitance.

2.4.1.5 Calorific Output

The calorific output of an initiator includes the total heat energy an initiator produces. This output is accurately estimated when the heat of explosion per unit weight of the pyrotechnic charge is known. However, calorific output can be determined experimentally through the use of the bomb calorimeter. An evaluation of test methods is presented in reference 97.

2.4.1.6 Pressure Output

Measurements of the pressure output of an initiator are frequently obtained by firing in a closed bomb. This procedure does not completely describe the unit's ability to ignite, but does provide a simple method of determining (by measurement of the maximum pressure and the time to attain maximum pressure) the reproducibility or relative performance of an initiator. For these tests to provide valid data, heat losses are restricted to less than 15 percent during the time the initiator is functioning (ref. 97). Pressure oscillations are inherent in the system as a consequence of the "shock" nature of the initial output, although these can be damped to some extent at the expense of response rate. Test chamber volumes are usually in the range of 10 to 40 cubic centimeters, and the pressure sensors are mounted to provide maximum protection against shock waves and direct impingement of initiator efflux.

2.4.1.7 Heat Flux Output

The measurement of heat flux output is the truest indication of the effectiveness of an initiator. However, until recently the lack of instrumentation capable of accurately measuring heat flux has restricted use in normal practice. The development of sensing devices (as described in references 98 and 99) has removed this restriction, and testing this parameter as a criterion of performance is now feasible.

THIS DOCUMENT PROVIDED BY THE ABBOTT AEROSPACE
TECHNICAL LIBRARY
ABBOTTAEROSPACE.COM

2.4.2 Energy Release System

2.4.2.1 Pyrogens

The propellants used in pyrogens must conform to requirements similar to those for propellants used in rocket motors. Consequently, the testing of these propellants is similar to that used for rocket motors. However, frequently the tolerances on burning rate and the physical properties of propellants used in pyrogen igniters are not as critical as when the propellants are used in rocket motors. The required energy flux outputs can be achieved over a relatively wide burning-rate tolerance. The smaller propellant webs, thicknesses, and lengths in pyrogens result in less strain from temperature changes.

2.4.2.2 Pyrotechnics

"Heat of explosion" is the term used to describe the measurement of available energy produced when a given weight of pyrotechnic is burned in an inert atmosphere so that the total energy output produced by the reaction can be measured. This quantity is readily measured by laboratory apparatus and is a good, though not completely infallible, indicator of pyrotechnic performance. This measurement, however, does not reflect the rate of the energy output, which is dependent on the burning rate. Because pyrotechnics are normally used in pressed form with a large variety of sizes, press conditions, densities, etc., no generally accepted burning-rate test has been developed. Consequently, the rate of pressurization produced by a pelleted pyrotechnics sample is used as an indication of the burning rate. The most common measurement of pyrotechnic pellet integrity is its crush strength, though special measurements of friability are sometimes made by vibration, shock, or impact testing. Special testing to evaluate new or changed formulations includes differential thermal analysis (DTA), determination of ignitability (using, for example, the arc-image furnace), and measurement of the radiant energy spectrum during the pyrotechnic combustion.

2.4.3 Hardware

When the design of the igniter imposes a requirement that the hardware serve as a pressure vessel during the operation of the energy release system, the pressure-retention capability of the assembled hardware components must be proven. Failures may occur either as leakage or rupture. Leaks are measured at both low and high pressure differentials, because some types of O-rings and gaskets depend on high pressures to effect a seal. For extremely low leak requirements, e.g., 10^{-6} cc/sec, the hardware is pressurized with helium and the rate of leak determined by use of a mass spectrometer. For less critical applications, pressure gages or leak-detecting compounds are used to evaluate a seal.

The most positive way to evaluate the structural adequacy of igniter hardware is to pressurize until a failure occurs, or until a predetermined margin of safety is

THIS DOCUMENT PROVIDED BY THE ABBOTT AEROSPACE
TECHNICAL LIBRARY
ABBOTTAEROSPACE.COM

demonstrated. When these tests are made, hydraulic oil is used as the pressurizing medium as a safety measure. However, in some instances, it has been feasible to design the components so that the margins of safety could be adequately proven by stress analysis. In these cases, the theoretical margin of safety is kept well above the limit and is based on the worst combination of conditions relative to each variable involved.

The hardware designed and proven as above is protected against corrosion to ensure that no weakening occurs. The most adverse corrosive environment normally encountered is the salt spray. A standard procedure for evaluating this corrosion has been developed and is defined in MIL-STD-331, Method 107 (ref. 4). Similarly, provisions are made to ensure that there will be no degradation of seals such that leaks in hardware components develop subsequent to the final leak test. Many of the environmental conditions to which the igniter may be subjected can contribute to these failures. Thus, the usual procedure is to determine what the conditions are, and then evaluate the potential effects of these conditions on the hardware components and assemblies. Frequently specified environments and proof test requirements are discussed in section 2.0.1.3 and table I.

2.4.4 Complete Igniters

Many of the nondestructive electrical tests performed on initiators are also performed after the initiators are assembled in the igniter; therefore, discussions will not be repeated. The primary testing involved is to evaluate the ballistic performance and output requirements.

2.4.4.1 Pyrogen Pressure-Time Performance

Pyrogen igniters are evaluated adequately for reproducibility and quality control by measuring the pressure-time profile during test firing. In this respect, the pyrogen acts as a small self-contained rocket motor. The igniter is fired in the open with internal operating pressures taken by use of conventional pressure-sensing transducers and high-speed (e.g., 40 in./sec) recording equipment.

2.4.4.2 Pyrotechnic Pressure-Time Performance

Pelleted pyrotechnic igniters frequently are enclosed in open mesh or perforated chambers, and pressures within the igniter chamber are not closely controlled. Consequently, these igniters are tested by firing in a vented or closed vessel of specific volume and configuration. The time to initial pressurization (10 percent of maximum pressure), the time to near completion of pressurization (75 to 90 percent of maximum pressure), and the maximum pressure are the parameters most frequently measured. The test vessel is sized so that accurate pressure readings—usually in the range of 500 to 2000 psi—can be made.

THIS DOCUMENT PROVIDED BY THE ABBOTT AEROSPACE
TECHNICAL LIBRARY
ABBOTTAEROSPACE.COM

2.4.4.3 Igniter Heat Flux Output

As in the case of initiators, the testing of heat flux output is relatively new. However, it is the most valid representation of the effectiveness of an igniter. Previously, the lack of calorimeters that could withstand the igniter exhaust temperatures without burning or coating over, yet would have sufficiently fast response times, prevented specifying heat flux as a proof test. The use of calorimeters as described in references 97 to 99 has circumvented this problem. The test can be applied to all types of igniters currently in common use.

THIS DOCUMENT PROVIDED BY THE ABBOTT AEROSPACE
TECHNICAL LIBRARY
ABBOTTAEROSPACE.COM

3. DESIGN CRITERIA and Recommended Practices

3.0 General

3.0.1 Design Requirements

The igniter design shall be based on the following priority of requirements:

(1) *Specified Performance*
(2) *Specified Reliability*
(3) *Lowest Possible Cost*

The first step in design is to select an igniter type that will provide the required performance characteristics. In view of past experience and current widespread usage in industry, the selection of either a pelleted pyrotechnic or a pyrogen igniter is recommended unless specific conditions dictate the use of one of the alternate types. Better control of burning rate and surface area can be achieved with pyrogens, and this type is recommended for use where high levels of reproducibility are required.

The igniter is a component of rocket motor that is itself a component of a larger system. Because reliability of the major system usually must be very high, an even higher requirement is imposed on each component to attain the objective for the end item. However, sufficient testing to demonstrate these high reliability levels, evaluated for a variety of performance requirements, is often prohibitively expensive. Thus, it may be necessary to estimate reliability on the basis of the design evaluation, similarity of components, and extrapolated test data.

Design requirements should be specific as to what the reliability requirement is and on what basis it is determined. These requirements may evolve directly from a vendor specification, or may have to be assessed on the basis of the reliability required to ensure compliance of the complete motor with its specified level of performance.

The initial igniter design concept should be evaluated to determine whether compliance with reliability requirements is feasible. Trade studies and evaluation of alternate configurations will aid in selection of the unit having the greatest probability of reliable performance. Allocation of reliability requirements to the subcomponents of the igniter is recommended. Periodic design reviews should be held during the design and development phase to facilitate early detection of potential failure modes. MIL-STD-756, Reliability Prediction (ref. 100), provides procedures for predicting the quantitative reliability of a product during the development phase to reveal design weaknesses and to form a basis for apportionment of reliability requirements to its various components. A more comprehensive discussion of the fundamentals of reliability prediction and its underlying theory is presented in reference 101.

THIS DOCUMENT PROVIDED BY THE ABBOTT AEROSPACE
TECHNICAL LIBRARY
ABBOTTAEROSPACE.COM

The relative costs of pelleted pyrotechnic and pyrogen igniters depend on the igniter size, material, and quantity required. Pelleted pyrotechnic igniters are recommended for use in small motors because lower labor and hardware costs make them less expensive to produce in this size range. However, for large igniters the material costs of propellants for pyrogens are so much lower than the cost of pyrotechnics that they counteract the higher labor and hardware costs of pyrogens. Therefore, for large motors pyrogen igniters are recommended. In intermediate ranges, the choice must be based on an analysis of the specific igniter design and manufacturing conditions.

3.0.1.1 Ballistic Performance

3.0.1.1.1 Ignition Effects

The igniter shall produce propellant ignition and sustained combustion without shock or other adverse effects on the motor.

Energy available for the ignition and the control of pressure and temperature during release of that energy are specific functions of the energy release system. The design practices recommended for this particular system are given in section 3.2.

3.0.1.1.2 Ignition Timing

The igniter shall perform with ignition delay, ignition time interval, and transient characteristics controlled in accordance with end use requirements.

This criterion applies with equal force to all igniters, but the manner in which each requirement is satisfied depends on individual circumstances and involves different parts of the igniter. Specific procedures for meeting the criterion are discussed separately.

Control of ignition delay is a function of initiator design, and recommended practices are provided in section 3.1.5.5. Control of ignition time and ignition transients is a function of energy release system design; recommended practices are presented in section 3.2.

3.0.1.2 System Interface

3.0.1.2.1 Envelope Limits

The igniter shall not exceed envelope dimensional limits imposed on the motor.

THIS DOCUMENT PROVIDED BY THE ABBOTT AEROSPACE
TECHNICAL LIBRARY
ABBOTTAEROSPACE.COM

Before initiating the design, the designer should examine all applicable drawings, specifications, or other imposed requirements and then prepare a control drawing defining the limits imposed. This drawing must include envelope dimensions, location, and necessary mating connections with sources of actuation.

3.0.1.2.2 Mating Fits

The igniter shall comply with the interface requirements for proper fit with mating components.

In the early design stages, the interface dimensions for mounting the igniter in or to the motor, along with space or position limitations resulting from the internal configuration of the propellant grain, should be incorporated in the control drawing. Coordination in preparation and sign off of this drawing by designers of other affected components is recommended.

3.0.1.2.3 Mating Attachments

The igniter design and its location on the motor shall be such that mating attachments are easily and reliably made.

Bolted or keyed closures are preferred over threaded closures to ensure that mating connections, initiator ports, igniter components, markings, etc. are in the correct and most accessible position. Igniter mounting provisions that provide positive orientation with respect to motor components are recommended.

3.0.1.3 Use Environment

3.0.1.3.1 Handling and Transportation

The igniter shall withstand without adverse effect on its performance the acceleration forces and shock and vibration levels specified or anticipated during handling and transportation.

All threaded closures or joints must have positive locking provisions to prevent loosening. Approved methods are self-locking nuts per MIL-N-25027 (ref. 102), lock wiring per MS 33540 (ref. 103), and the use of sealing compounds per MIL-S-22473 (ref. 104).

THIS DOCUMENT PROVIDED BY THE ABBOTT AEROSPACE
TECHNICAL LIBRARY
ABBOTTAEROSPACE.COM

Stress analysis of all structural components, as well as analysis of the thermal effects on hardware components during motor operation, is recommended. Results of the thermal analysis should be used to determine whether external insulation of the igniter hardware is required. For pelleted pyrotechnics, packing within the igniter chamber should be sufficient to limit attrition to less than 4 percent. Packing material used in proximity of the pyrotechnics must be chemically compatible and should be located so that it does not interfere with the ignition process. For pyrogens, adequacy of propellant bonds and web thicknesses should be determined by stress analyses before design release. All openings, closures, and joints should be sealed with bonded plastic films or sealants to prevent loss of powdered material or contamination of external surfaces. Caution must be exercised to ensure that plastic films and sealants used are conductive or are adequately grounded to prevent electrostatic buildup.

3.0.1.3.2 Storage

The igniter shall withstand without adverse effect on its performance the anticipated motor storage conditions and any specified temperature extremes, humidity ranges, and corrosive atmospheres.

Unless inherently corrosion resistant, metal parts must be treated with protective coatings to resist corrosion caused by atmospheric conditions likely to be encountered in storage. Care must be exercised in design to avoid dissimilar metal combinations that will be galvanically active as defined in MS 33586 (ref. 105). When these combinations are unavoidable, insulation and protection should be provided. Pyrotechnic and propellant charges should be sealed to prevent exposure to high humidity conditions. When large temperature extremes are anticipated, a grain stress analysis of pyrogen propellants should be conducted to determine whether the grain will withstand the temperatures without cracking. (Consult the Design Criteria Monograph on Solid Propellant Grain Structural Integrity Analysis for further information on corrective actions.)

3.0.1.3.3 Operation

The igniter shall perform its required function under the specified operational conditions of temperature, altitude, launch loads, acceleration force, and vibration levels.

Initiators intended for use at high altitudes should be hermetically sealed but should not depend on the seal for satisfactory functioning. The prime charge should be readily ignitable at low pressures. The subsequent ignition train should be designed so that each igniter chamber is pressurized by the initiator or by an intermediate charge, thus effectively eliminating the environmental pressure effect until ignition of the main charge is accomplished. When an intermediate charge is required, the use of small pellets or granules of B-KNO_3 as described in section 3.2.3.2 is recommended. The mass flow rate from the igniter should be sufficient to ensure that the flow through the motor nozzle is choked, thus providing a continuous system of successive pressurizations to counteract low ambient pressures.

THIS DOCUMENT PROVIDED BY THE ABBOTT AEROSPACE
TECHNICAL LIBRARY
ABBOTTAEROSPACE.COM

Components used on interplanetary vehicles may be required to undergo sterilization to prevent contamination of other planets with earth bacteria. The method currently preferred is to subject the item to be decontaminated to 6 cycles of dry heat at 135° C for 56 hours (ref. 106). Igniters intended for use on interplanetary vehicles must be capable of withstanding this environment.

Temperature extremes affect ignition as shown in equation (14) (sec. 2.0.2.3). Consequently, the igniter should be designed to ensure that the heat input to the propellant surface is at the rate and for the duration required to raise the propellant surface from its initial temperature to its ignition temperature over the specified temperature range, when the conditions for ignition are evaluated according to the relationship expressed in the equation.

3.1 Initiation System

3.1.1 Low-Voltage Electroexplosive Devices

3.1.1.1 Bridgewire–Prime Charge Design

The bridgewire shall be a resistive element capable of converting the specified electrical firing signal into thermal energy output at the rate necessary for prime charge ignition, yet maintain maximum insensitivity to subfiring levels of electrical energy.

One of the methods described in section 2.1.1.1 should be used to determine the physical and chemical characteristics of the bridgewire necessary to achieve ignition within the required time upon application of the available input stimulus. The heat-transfer model (sec. 2.1.1.1.3) is recommended when the necessary properties are known or can be economically determined, and the accuracy of the initial design is of paramount importance. This model, although relatively complicated, is the most accurate and comprehensive. When experimental data can be obtained rapidly and inexpensively, the empirically derived power-density relationships (sec. 2.1.1.1.2) are recommended as an alternate method. To establish the sensitivity of the prime charge to heat, the ignition temperature should be determined by differential thermal analysis (ref. 97).

3.1.1.2 Prime-Charge Characteristics

3.1.1.2.1 Prime-Charge Loading

Prime-charge loading shall be such that heat transfer from the bridgewire to the prime charge shall be sufficient to ensure reliable initiation of the prime charge within the specified time.

The prime charge should be applied to the bridgewire so that intimate contact is ensured and maintained through all environmental conditions. Where the bridgewire is mounted

THIS DOCUMENT PROVIDED BY THE ABBOTT AEROSPACE
TECHNICAL LIBRARY
ABBOTTAEROSPACE.COM

flush with the terminal-pin insulation and a suitable cavity is available, the recommended procedure is to press in the prime charge under loads of 5,000 to 20,000 psi. This method is conducive to close control of charge weight and loading density. Where bridges are elevated, the charge should be "buttered" in (where there is a cavity) or a bead applied around the bridge. When either of these two methods is used, a binder and a suitable solvent must be used to obtain the proper charge consistency and to hold the prime charge in the desired location.

3.1.1.2.2 Prime-Charge Compatibility

The prime charge shall be chemically compatible with the bridgewire and all other components in the system.

The extensive data available on chemical reactivities of prime-charge ingredients and formulations (ref. 64) should be used to determine the chemical compatibility of the prime charge with the bridgewire and all other components in the system. If suitable data are not available, compatibility should be determined by analytical tests.

3.1.1.2.3 Prime-Charge Composition

The ratio of ingredients, the particle size of metals and oxidants, the chemical properties of ingredients, and either the weight or the volume of the prime-charge formulation shall ensure ignition of the output charge within the specified time.

To ensure that the ignition temperature, the reaction products, and the energy output of the prime charge are maintained at consistent levels, the percentage by weight of each ingredient in the formulation should be specified and a tolerance on permissible variation imposed. The particle size distribution of these components should be defined, and suppliers should be required to comply with the limits imposed. Finer particles are more easily ignited, metal powders being most ignitable. Chemical composition of all ingredients, including limits on impurities, should be controlled by imposing applicable specifications or, in the absence of such specifications, by defining the composition as a firm requirement to all suppliers. The preferred control on the prime-charge quantity is by weight. Volumetric control should be used only where there is available a cavity of fixed volume in which the prime charge can be loaded to a consistent density.

3.1.2 High-Voltage Electroexplosive Devices

3.1.2.1 Exploding Bridgewire Systems

3.1.2.1.1 Bridgewire Characteristics

The bridgewire of an EBW shall be of a size and material that can be exploded by a very short duration pulse of very high voltage and current and can effectively

THIS DOCUMENT PROVIDED BY THE ABBOTT AEROSPACE
TECHNICAL LIBRARY
ABBOTTAEROSPACE.COM

transmit thermal and mechanical energy to the initiator charge. The bridgewire shall satisfy criterion 3.1.1.2.2.

Adequate theoretical approaches to the design of EBW initiators have not been developed to date. However, references 50 through 57 and reference 107 include extensive developmental data on the effects of the many variables involved.

Studies on the effects of bridgewire diameters, lengths, and materials and the resulting recommendations are included in references 53 through 56. For the most common firing unit, which has an energy source of 2000 volts discharged from a 1.0 μF capacitor, a gold bridgewire 0.002 in. diameter and 0.050 to 0.075 in. long is recommended.

3.1.2.1.2 Prime-Charge Characteristics

The prime charge of an EBW shall be ignitable only by explosion of the wire. A pyrotechnic mixture, when used as the prime charge, shall satisfy criterion 3.1.1.2.3.

The prime charge must be a high explosive that is not ignited by simple thermal heating, or the prime charge must be protected from bridgewire heating by a physical barrier. When anticipated storage temperatures will not exceed 141° C, PETN is recommended as the prime charge. For temperatures greater than 141° C, but less than 204° C, RDX is recommended as a high-explosive prime charge. A loading density of approximately 1.0 gm/cc is recommended for both types. Both PETN and RDX sublime under vacuum; therefore they must be sealed against long-term vacuum exposure.

Where storage temperatures in excess of 204° C are anticipated, ignition by simple heating should be prevented by using pyrotechnic charges that are physically separated from the bridgewire. Lead foil that is not physically in contact with the bridgewire but is ruptured by its explosion is recommended as the barrier material. Supplementary coatings of detonating or deflagrating materials should be applied to the bridgewire or to the surface of the barrier to ensure ignition of the prime charge. Mixtures composed of zirconium and potassium perchlorate with a plastic binder are recommended (ref. 59).

3.1.2.1.3 Transition Charges

When a detonating prime charge is used in an EBW, the EBW shall contain the charges necessary to ensure transition from detonation of the prime charge to deflagration of the output charge.

For small output charges of less than 1 gram, where controlled output rates are not required, charge material capable of direct ignition by the detonating prime charge is recommended. Compositions having the required properties are mixtures of cupric oxide, magnesium, and Teflon and mixtures of aluminum powder, cupric oxide, potassium perchlorate, and a rubber binder. For large charges requiring controlled output, these

THIS DOCUMENT PROVIDED BY THE ABBOTT AEROSPACE
TECHNICAL LIBRARY
ABBOTTAEROSPACE.COM

formulations should be used as intermediate charges, and the main charge should consist of a pelleted or granulated material of one of the formulations described in section 3.2.3.2.

3.1.2.2 Voltage-Blocking Devices

When required by reliability provisions, an EED shall remain operative after having been subjected to the conditions of criterion 3.1.5.2.

To prevent inadvertent dudding of EBW initiators by application of low voltages directly to the firing circuit, spark gaps should be incorporated in the circuit as voltage-blocking devices. The gap distance in spark gaps should be controlled by use of a nonconducting film, e.g., aluminum oxide (ref. 60). Air gaps are most difficult to control and consequently provide less consistent performance. Where ground support equipment is used to supply sustained high-voltage levels (500 volts dc), inadvertent firing or dudding at low voltage levels should be prevented by the use of cold-cathode trigger diodes in the initiator circuit (ref. 61).

3.1.2.3 Overload Protection

Firing of an EED shall not result in an overload of the firing circuit.

Fixed, wirewound resistors of the type defined by specification MIL-R-26 (ref. 108) should be used to prevent circuit overload in initiator circuits subjected to high firing voltages.

3.1.3 Through-Bulkhead Initiators

3.1.3.1 Bulkhead-Donor/Acceptor Charge Design

The TBI shall include an integral bulkhead with donor and acceptor charges located externally and internally, respectively, so that propagation through the bulkhead without adverse effect on the bulkhead integrity is ensured.

The recommended design parameters for through-bulkhead initiators are included in reference 62 and references 109 through 111. The recommendations are summarized as follows:

(1) Suggested housing-barrier material is steel.
(2) Barrier thickness should be 0.100 to 0.150 in. for flat-bottom cavities or 0.050 to 0.100 in. for cavities with rounded bottoms, but must be accurately established for the specific configuration.
(3) PETN has the sensitivity required for reliable propagation across the bulkhead and should be used for the donor and acceptor charges.

THIS DOCUMENT PROVIDED BY THE ABBOTT AEROSPACE
TECHNICAL LIBRARY
ABBOTTAEROSPACE.COM

(4) Donor and acceptor charge weights should be approximately equal.
(5) For reliable propagation, the charges must be in intimate contact with the barrier.
(6) The acceptor charge should be pressed in at high pressure (approximately 15,000 psi).

The properties of detonating and deflagrating charges used as TBI components are provided in reference 112.

3.1.3.2 Transition Charge Characteristics

The TBI charges shall ensure proper transition from detonation of the acceptor charge to deflagration of the output charge.

To achieve faster and more reliable transition from detonation of the acceptor charge to deflagration of the output charge, low detonation velocities and consequently low shock pressures in the transition stage are recommended (ref. 62). If the output charge is easily ignited and in granular form, deflagration should be accomplished by direct coupling of the output charge with the acceptor charge. However, for output charges that are difficult to ignite or are in pressed forms that may be shattered by high shock forces, the detonation velocity should be degraded in steps through the use of an intermediate charge having a lower detonation velocity than the acceptor charge. The relationships developed in reference 62 are recommended for determining the required length of the transition zone from one detonation velocity to another.

3.1.3.3 Attachment Features

The external features of the initiator shall facilitate ready attachment so that the initiating explosive train is adjacent to the donor charge.

Bayonet-type connections that can be sealed against atmospheric contamination are recommended. Other types of connections may be required to provide proper attachment with a specified method of initiation.

3.1.3.4 Safeguards

The donor charge shall be initiated by the output from the initiating explosive train, but shall be safe against accidental ignition to the maximum extent feasible.

The donor charge should be located immediately adjacent to the initiating explosive charge when the initiator is ready to be fired. Premature functioning should be prevented by displacing the initiating charge from the donor charge until the latest feasible time prior to firing, preferably by using internal safe/arm systems. An alternate method is to delay connecting the initiating train with the TBI until the unit is ready to fire.

THIS DOCUMENT PROVIDED BY THE ABBOTT AEROSPACE
TECHNICAL LIBRARY
ABBOTTAEROSPACE.COM

3.1.4 Initiator Output Charges

3.1.4.1 Characteristics

Initiator output charges shall be readily ignitable by the prime charge and shall provide the heat energy necessary to ignite the energy release system or the next component in the ignition train within the required time interval.

For small, relatively straightforward ignition trains, charge formulations and sizes should be established on the basis of experience, test results, and fundamental design information (ref. 46). For more complex systems, the ignitability characteristics and ignition energy requirements for the various charges should be evaluated using the methods recommended for characterizing solid propellants (refs. 23 and 25). The available heat energy content per unit weight of the output charge should either be known from existing data or be determined by analysis; the recommended method of analysis is provided in NAVORD OD 9375 (ref. 113). The value for specific heat energy should then be used to calculate the weight of the formulation required to produce the total heat output desired from the initiator. The initiator's effectiveness in producing the required output should be evaluated by actual heat flux measurements. The procedures provided in reference 98 are recommended for determining heat flux output in closed bombs or in open tubes, as applicable.

3.1.4.2 Pressure Output

When the ignition energy requirements of the next component in the ignition train are pressure-dependent, the initiator output charge shall produce the pressure necessary to obtain reliable ignition under all environmental conditions.

When pressurization by the igniter is required, selection of a formulation having a high impetus value as described in section 2.1.4 is recommended. The charge weight necessary to achieve the desired pressurization should be computed by the method provided.

3.1.4.3 Chemical Properties

The output charge shall be chemically stable and compatible with other charges and components over the required operating and storage temperature range.

The use of a formulation that has been tested and proven chemically stable over the required temperature range is recommended. When a formulation of this type cannot be used, the information on formulations, reaction products, and material properties available in references 46, 63, and 64 should be used to determine the expected performance; then the selected composition should be evaluated by differential thermal analysis.

THIS DOCUMENT PROVIDED BY THE ABBOTT AEROSPACE
TECHNICAL LIBRARY
ABBOTTAEROSPACE.COM

3.1.5 Safety Features

3.1.5.1 Safe/Arm Systems

An igniter shall be safe against accidental firing.

A safety mechanism that includes a mechanical barrier in the igniter explosive train and an electrical interlock for the igniter firing circuit is recommended for use with low-voltage electroexplosive devices. A TEST arrangement that will permit the electrical circuit to be checked safely is also recommended. The three conditions that should be provided by the safety mechanism are

SAFE — Igniter explosive train is blocked by barrier, and igniter firing circuit is open.
ARM — Igniter explosive train is unobstructed by barrier, and igniter firing circuit is closed.
TEST — Igniter explosive train is blocked by barrier, and igniter firing circuit is closed.

The igniter safety mechanism (ISM) should be capable of being returned to the SAFE condition from either the ARM or TEST condition, and a positive lock to prevent accidental movement from one position to another should be provided.

It is further recommended that the end item application be evaluated to ensure that the following features have been considered:

(1) Manual or electrical arming.
(2) Source and magnitude of actuation force.
(3) External indication of condition.
(4) Physical limitations on position of arming actuators.
(5) Provision for fail-safe condition.
(6) Requirement for automatic return features.
(7) If fired in the SAFE or TEST position, the ISM cannot subsequently be placed in the ARM position.

Because safe/arm mechanisms are normally designed specifically for a given system, no description of the detailed features are provided herein. However, a review of design and development history of related proven systems and some of the more novel concepts that may be potentially applicable is recommended (refs. 114 through 117).

Recommended safeguards for a TBI are given in section 3.1.3.4.

THIS DOCUMENT PROVIDED BY THE ABBOTT AEROSPACE
TECHNICAL LIBRARY
ABBOTTAEROSPACE.COM

3.1.5.2 Sensitivity to Firing Stimuli

3.1.5.2.1 Sensitivity to Firing Current

Electrical sensitivity of an EED shall be as low as feasible consistent with its application.

The use of prime-charge formulations that have high ignition temperatures is recommended for reducing the sensitivity of EED to current. For low-voltage EED, the bridgewire resistance should be 1.0 ohm unless the available power is not adequate to provide ignition at this resistance; this resistance generally provides the optimum insensitivity balance between current and power. To further decrease the sensitivity, place the bridgewire in contact with the ceramic or glass used to seal the terminal pins, thus enabling the seal to absorb part of the heat induced in the bridgewire.

3.1.5.2.2 Sensitivity to Firing Voltage

A high-voltage EED shall not fire when subjected to any of the following conditions:

(1) *36 volts dc from a 0.1-ohm impedance source applied across the terminals or between the terminals and the case.*
(2) *250 volts ac from a 0.2-ohm impedance source applied across the terminals or between the terminals and case.*
(3) *A 500-pF capacitor charged to 20,000 to 25,000 volts applied across the terminals or between the terminals and the case.*

Initiator types that have been used successfully to comply with these no-fire sensitivity requirements are spark-gap initiators, exploding-bridgewire initiators, and thermally-initiated EED with voltage-blocking devices (sec. 3.1.2.2) in the bridgewire circuit. Of these, the EBW initiator is recommended for most applications. The recommended design practices for EBW are provided in section 3.1.2.

3.1.5.3 Sensitivity to Induced Current

The circuitry of an EED shall be such that hazards from electromagnetic radiation are reduced to a minimum.

The design methods recommended to reduce the sensitivity of EED to induced current are provided in Specification MIL-P-24014 (ref. 118) and in the HERO Design Guide, NAVWEPS OD 30393 (ref. 65). These documents have been prepared as a result of comprehensive evaluations conducted through the HERO (Hazards of Electromagnetic Radiation to Ordnance) Program (refs. 96 and 119).

THIS DOCUMENT PROVIDED BY THE ABBOTT AEROSPACE
TECHNICAL LIBRARY
ABBOTTAEROSPACE.COM

3.1.5.4 Sensitivity to Electrostatic Discharge

An EED shall have minimum susceptibility to accidental ignition by electrostatic discharge.

To prevent accidental ignition by electrostatic discharge, the cavity in the housing containing the pyrotechnic charge should be electrically insulated from the terminal pins and the bridgewire by a nonconductive coating applied to the internal parts of the housing and closure or by an insert or charge holder fabricated from a nonconductive material.

An alternate approach is to use a high-resistance element or spark gap between the circuit pin and the housing, thus preventing buildup of electrical potential between these components. To use this method, the resistance of the element must be less than that of the pyrotechnic charge but high enough to ensure that, when the firing current is applied, the primary flow of current is through the bridgewire.

3.1.5.5 Delay Systems

An initiator shall provide any delayed functioning necessary for operational or safety purposes.

Methods for providing required time delays between application of the firing current and motor ignition include both electrical and chemical systems. Where electrical means are used, conventional electronic delay components are incorporated in the firing circuit; these electronic means will not be discussed here.

The use of pyrotechnic delay columns as the chemical delay system for solid rocket igniters is recommended for most applications. A conventional primer or initiator should be used to ignite a pressed column of pyrotechnic having a closely controlled burning rate that gives the desired delay. An output charge at the end of the column initiates the motor igniter. For specific formulations and characteristics, reference 36 is recommended as a source of detailed information on current practices.

Recent developments in delay systems involving controlled chemical reaction rates are exothermic alloying wires (refs. 120 and 121) and small-column insulated delays (SCID) (refs. 122 and 123). The current developmental and operational status of these newer developments should be evaluated before a delay system is selected.

THIS DOCUMENT PROVIDED BY THE ABBOTT AEROSPACE
TECHNICAL LIBRARY
ABBOTTAEROSPACE.COM

3.2 Energy Release System

3.2.1 Basic Requirements

3.2.1.1 Heat Flux and Pressure

The energy release system shall provide the heat flux to the motor propellant and the pressure in the motor chamber necessary to ignite the propellant and produce sustained combustion within the required time limit.

Because pyrogen and pelleted pyrotechnic igniters comprise the bulk of igniters currently used in operational motors, the major portion of this section on recommended practices is devoted to these types. References are provided for other systems considered of potential value for specialized applications. Before determining energy release requirements, the designer should ascertain, to the extent the information is available, values for the following variables and design requirements:

(1) Propellant ignition energy requirements, including effects of pressure, temperature, surface condition, and aging.
(2) Location of igniter with respect to the propellant surface to be ignited.
(3) Free volume of the motor.
(4) Nozzle closure effects.
(5) Primary mode of heat transfer.
(6) Initial and total burning surface to be ignited.
(7) Motor port area.
(8) Motor nozzle throat area.
(9) Function time requirements.
(10) Time delays.

Methods for the design of igniters involve a mixture of empirical and theoretical treatments. The following sections describe the methods most commonly used by designers. It should be noted that the methods presented in sections 3.2.1.1.1 through 3.2.1.1.5 give energy requirements on the basis of motor characteristics without consideration of performance requirements, e.g., time to ignition, method of heat transfer, and ignition shock. Since propellant ignition time is an inverse exponential function of both heat flux and pressure (as discussed in sec. 2.0.2.3) compliance with complex or critical ignition requirements can be accomplished most effectively when the exact nature of these relationships is known. Thus the designer is able to determine whether changes in heat flux, pressure, or duration will most effectively accomplish ignition objectives. The methods provided in section 3.2.1.1.6 utilize these data in determining energy release system requirements. The selection of a method for a given situation usually is dictated by the designer's experience, complexity of the model, precision required in the motor, and relative expense of trial-and-error testing as opposed to more comprehensive theoretical treatments.

THIS DOCUMENT PROVIDED BY THE ABBOTT AEROSPACE
TECHNICAL LIBRARY
ABBOTTAEROSPACE.COM

3.2.1.1.1 Free Volume

A reasonable correlation exists between the weight of a given pyrotechnic ignition material required to ignite a motor and the free volume of that motor. This relationship is described in reference 124, in which a plot on logarithmic coordinates of the weight of Alclo (sec. 3.2.3.2) versus motor free volume yields a straight line having a slope of 0.7 as shown in figure 10. Thus, the following empirical equation results:

$$W_i = K V^{0.7} \tag{28}$$

where

W_i = weight of Alclo igniter pellets, gms
V = motor free volume, in.^{3}
K = empirically derived constant

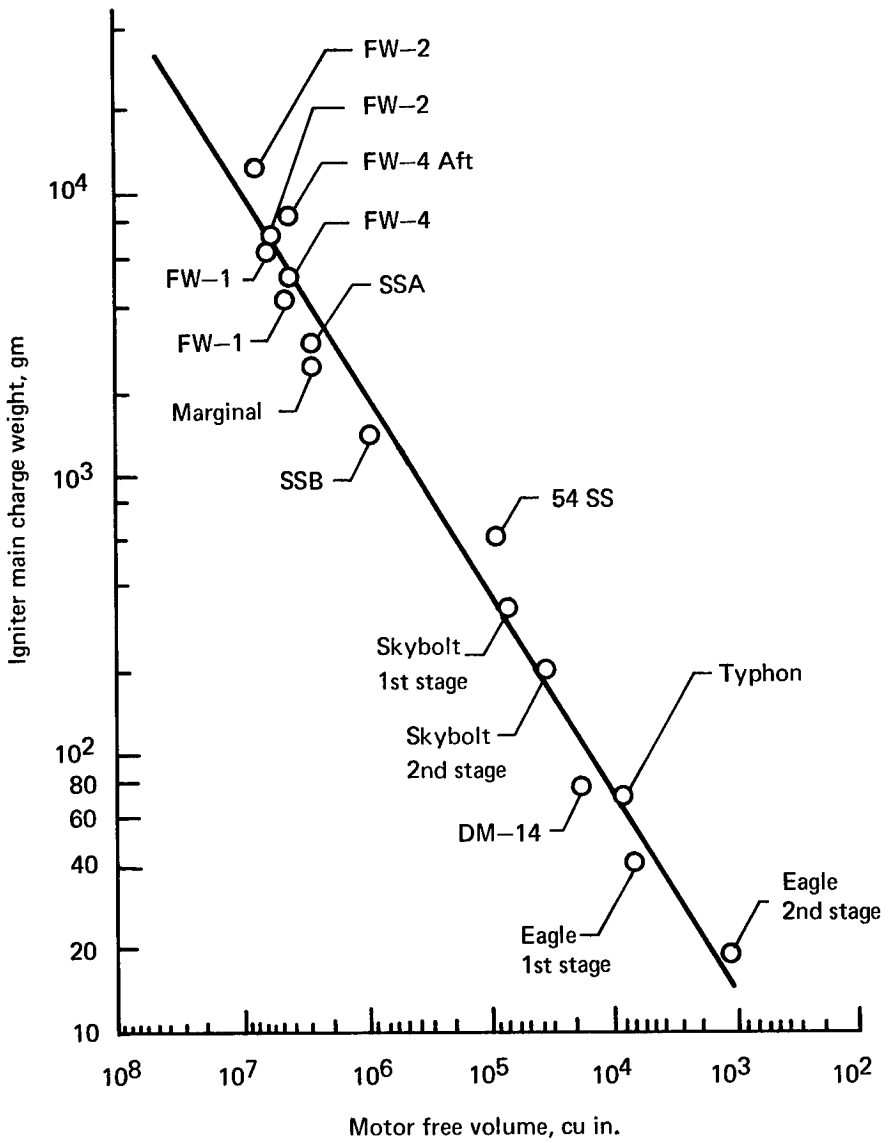

Figure 10.—Igniter charge weight vs motor free volume.

THIS DOCUMENT PROVIDED BY THE ABBOTT AEROSPACE
TECHNICAL LIBRARY
ABBOTTAEROSPACE.COM

This correlation obviously makes the assumption that all pertinent motor variables vary in accordance with the free volume, and thus is a "broad-brush" approach to igniter design.

3.2.1.1.2 Surface Area

Another highly simplified equation for estimating ignition energy requirements has been derived empirically on the basis of total area exposed to igniter products and propellant ignitability (refs. 25 and 125). The equation is

$$Q = A C \sqrt{E_{100}} \tag{29}$$

where

Q = total energy required for propellant ignition, cal
A = area exposed to products of igniter combustion, cm^2
E_{100} = threshold ignition energy of the propellant at 100 psig, cal/cm^2
C = constant that depends on type of ignition material used

Experimentally determined values of C for typical ignition materials are reported in reference 25.

Variations in the constant C apparently are caused by differences in the gas content of combustion products and the effect of the resulting pressure on propellant ignitability. Weight of ignition material required is calculated from the energy requirements Q in calories and the heat of explosion ΔH in cal/gm as follows:

$$\text{Grams of ignition material } W = \frac{Q}{\Delta H} \tag{30}$$

3.2.1.1.3 Critical Pressure

As previously discussed, at low pressures propellant ignition energy requirements are strongly dependent on pressure. This dependence decreases exponentially, reaching an essentially pressure-independent regime that for many propellants occurs in the range 50 to 100 psia. Consequently, one of the methods used for sizing igniters has been based on attaining a given pressure in the motor port. The desired pressure is based on the "calculated critical pressure" required for sustained burning (ref. 126); or on the pressure–heat flux relationship obtained from arc-image data; or on an established pressure (e.g., 50 to 100 psia) based on experience.

There are various methods for determining the charge size and characteristics necessary to attain the desired pressure. When the nozzle closure burst pressure is sufficiently high or the nozzle is small, pressure obtained from a given charge should be calculated based on the free volume of the motor acting as a closed vessel. Methods for calculating pressurization in a vented chamber are described in references 127 and 128. When motor ignition times on initial tests are critical or the consequences of failure are severe, igniter pressure and heat flux output should be evaluated, prior to motor firings, in a test chamber that simulates motor volume and throat conditions.

THIS DOCUMENT PROVIDED BY THE ABBOTT AEROSPACE
TECHNICAL LIBRARY
ABBOTTAEROSPACE.COM

3.2.1.1.4 Mass Discharge Coefficients

The mass discharge coefficient C_{MD} often is used in the design of pyrogen igniters. C_{MD} is simply the ratio of the igniter mass discharge rate m_i to the motor nozzle throat area A_t, or

$$C_{MD} = \frac{\dot{m}_i}{A_t}, \text{ lb/sec-in.}^2 \tag{31}$$

This discharge coefficient is assigned a desired value based on experience and the configuration of the igniter and motor. The nominal value is 0.20 lb/sec-in.^{2}; but may be as low as 0.10 for ideal forward end ignition conditions or greater than 0.30 when the propellant surface is relatively inaccessible to the igniter efflux. The use of proper C_{MD} ensures that a certain pressure level in the motor is produced by the igniter; this aids the ignition of most propellants.

This method is used also for pyrotechnic igniters; it is not as simple to apply, however, because the $\dot{m}_i$ is usually highly regressive and equilibrium conditions are not maintained.

3.2.1.1.5 Bryan-Lawrence Equation

An empirical relationship between certain rocket motor parameters and the energy required to obtain satisfactory ignition (developed by the U. S. Naval Ordnance Laboratory (ref. 129)) is

$$Q = 38 \left[(A q_c) \left\{ \frac{L_g 4\pi A_p}{A} \right\}^{0.59} \right]^{1.06} \tag{32}$$

where

L_g = length of grain, cm
A_p = port area, cm^2
q_c = ignitability of propellant, cal/cm^2

To simplify computations the variables may be grouped, and the equation reduces to the following (calories are converted to British thermal units, and centimeters to inches):

$$Q = 116.5\, q_c^{1.06} \left[A^{0.435} L_g^{0.625} A_p^{0.313}\right] \tag{33}$$

THIS DOCUMENT PROVIDED BY THE ABBOTT AEROSPACE
TECHNICAL LIBRARY
ABBOTTAEROSPACE.COM

If q_c is considered an inherent characteristic of a specific propellant, then $116.5\ q_c^{1.06} = K$, a constant for that propellant. The plot of the grouped terms $A^{0.435}\ L_g^{0.625}\ A_p^{0.313}$ versus Q yields a straight line for each propellant as shown in figure 11. For a frequently used pyrotechnic formulation with a given heat of explosion, the graph also includes a direct conversion to the weight of ignition material, as shown.

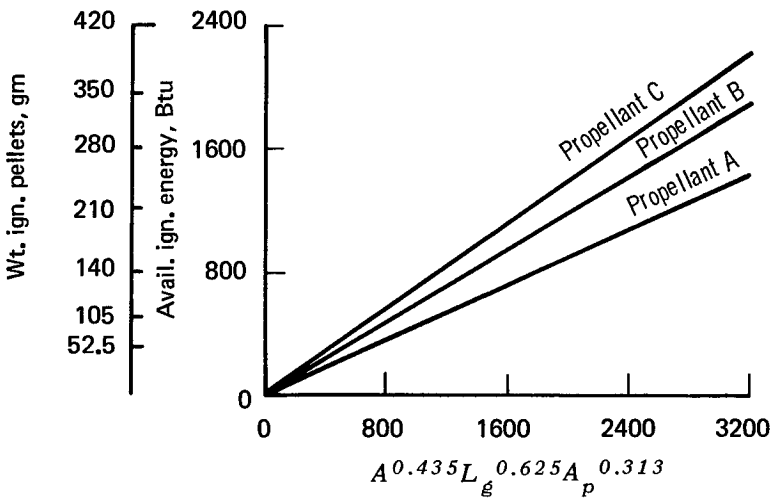

Figure 11.—Chart for estimating ignition energy requirements.

3.2.1.1.6 Heat Flux

The most accurate method for designing igniters is based on flux produced at the propellant surface by the igniter. This practice relates the design to the basic objective of raising the propellant surface temperature to that required to establish equilibrium combustion. However, a completely comprehensive relationship requires knowledge of several parameters that are difficult to define: the desired propellant surface temperature; the film coefficient for convective heating; the igniter efflux temperature at the film; and the contribution of radiative heating. Theoretical treatments of these areas have been discussed individually in sections 2.0.2.1, 2.0.2.2, and 2.0.2.3. The complexity of the relationships prevents the formation of a comprehensive analytical expression including all potential variables. However, by making simplifying assumptions and approximations, tractable relationships can be derived that generally are more precise than the empirical correlations. Two of these approaches are discussed in 3.2.1.1.6.1 and 3.2.1.1.6.2.

THIS DOCUMENT PROVIDED BY THE ABBOTT AEROSPACE
TECHNICAL LIBRARY
ABBOTTAEROSPACE.COM

3.2.1.1.6.1 *Comprehensive Method for Calculating Heat Flux*

As explained in section 2.0.2.3, the time required for a propellant surface to reach ignition temperature when exposed to a constant flux $\dot{q}$ may be approximated as follows (cf. eq. (14)):

$$t_i = \left(\frac{T_c C}{\dot{q}} \right)^2 \tag{34}$$

where

$$C = \sqrt{(\pi \rho c k)/2} \tag{34a}$$

$$T_c = T_i - T_o, \ ^\circ\text{F} \tag{34b}$$

Thus t_i, a thermal induction time for the solid, is a function of heat flux. The equation for flux, assumed to be a combination of convective and radiative heating, is of the following form:

$$\dot{q} = C_1 (\dot{m}_i)^m + C_2 \tag{35}$$

where

$$C_1 (\dot{m}_i)^m = \text{convective heat flux term, Btu/ft}^2\text{-sec} \tag{35a}$$

$$C_1 = 0.023 \frac{\text{Nu}}{\text{Nu}_\infty} \left(\frac{k}{D_p} \right) \left(\frac{4}{\pi^D p^\mu} \right)^{0.8} \left(\frac{C_p \mu}{k} \right)^{0.4} (T_g - T_s) \tag{35b}$$

m = 0.8 (per the Reynolds number exponent)
Nu = local Nusselt number
Nu_∞ = Nusselt number for established turbulent flow in a pipe
D_p = motor port diameter, ft
C_2 = radiative flux = $\sigma\varepsilon$ $(T_g^4 - T_s^4)$, Btu/ft^2-sec (35c)
k = gas thermal conductivity, Btu/ft-°F-sec
C_p = specific heat of gas, Btu/lb$_m$-°F
μ = gas viscosity, lb$_m$/ft-sec
T_g = gas temperature, °R
T_s = propellant surface temperature, °R

Therefore, when the ignition delay is specified, the required flux $\dot{q}$ is calculated; then the mass discharge from the igniter $\dot{m}_i$ required to give this flux is determined. The solution to this equation requires that the ignition temperature of the propellant be known. Satisfactory results have been obtained by this method, using arc-image data on a 1:1 basis, if first decomposition is used as the criterion of ignition and if the radiation effects are not significant (ref. 130). In establishing ignition temperatures and ignition requirements, the propellant surface conditions in the test samples must be representative of actual motor conditions. The effects of release agents, fuel-rich surfaces, and aging on ignitability can be highly significant (ref. 17).

THIS DOCUMENT PROVIDED BY THE ABBOTT AEROSPACE
TECHNICAL LIBRARY
ABBOTTAEROSPACE.COM

3.2.1.1.6.2 *Simplified Method for Estimating Heat Flux*

In this approach (refs. 18 and 90) convective heating is assumed to be strongly dominant and the induced flux follows the relationship

$$\dot{q} = h(T_g - T_s) \approx hT_g \tag{36}$$

The film heat-transfer coefficient h is reduced to terms of the mass flow rate of the igniter and the port area of the motor as follows:

$$h = 0.0296 \left(\frac{k}{x} \right) \left(\frac{x}{\mu g} \right)^{0.8} \left(\frac{\dot{m}_i}{A_p/144} \right)^{0.8} \tag{36a}$$

where x is the distance downstream from the igniter impingement point. Equations (36) and (36a) may be simplified to

$$\dot{q} = 0.0296\, Q_{ign} \left(\frac{\dot{m}_i}{A_p/144} \right)^{0.8} \tag{37}$$

Thus the induced heat flux $\dot{q}$ is calculated as a function of the igniter mass flow rate $\dot{m}_i$, the motor port area A_p, and the available energy of the igniter charge Q_{ign}. Pressure induced in the motor port by the igniter is calculated from conventional mass balance equations used in motor ballistics, assuming an inert free volume with no motor propellant burning.

To determine the flux required to obtain propellant ignition, knowledge of the pressure—heat flux—ignition time relationship for the propellant involved is required. Again, arc-image data providing curves of ignition time versus pressure at various flux levels have been used satisfactorily. When these curves are plotted with igniter-induced motor pressurization curves on a common graph, the intercept provides the ignition time, as illustrated in figure 12.

3.2.1.2 Pressure Output Rate

Within its limits as a controlling factor, the energy release system shall provide the rate of pressure or thrust onset required in the motor.

THIS DOCUMENT PROVIDED BY THE ABBOTT AEROSPACE
TECHNICAL LIBRARY
ABBOTTAEROSPACE.COM

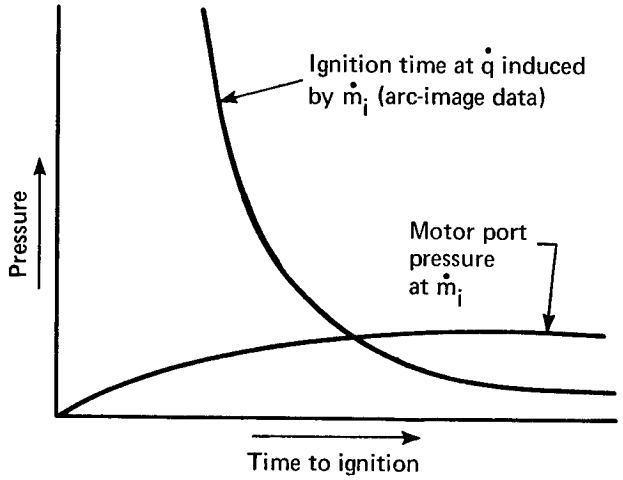

Figure 12.—Motor ignition time as a function of $\dot{m}_i$.

The design of an energy release system that provides a specified rate of pressure or thrust onset in a motor requires that the designer be able to predict analytically the entire ignition transient. The analytical expressions and methods of solution discussed in this section are recommended for prediction of these ignition transients.

To facilitate analysis of the ignition transient, the overall transient process should be divided into its three phases, as shown in figure 13.

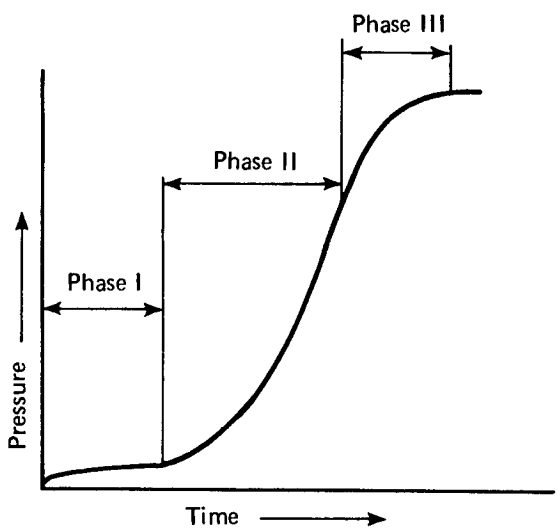

Figure 13.—Typical ignition pressure transient.

THIS DOCUMENT PROVIDED BY THE ABBOTT AEROSPACE
TECHNICAL LIBRARY
ABBOTTAEROSPACE.COM

Phase I, ignition lag time, is the time period from initiation of the igniter until first motor propellant ignition. Phase II, flame spreading interval, covers the time required from first propellant ignition until the complete grain surface is ignited. Phase III, chamber filling interval, is the time required to reach equilibrium burning pressure after the grain is completely ignited. By separating the major phases of ignition in this fashion, an analogy between the actual physical problem (illustrated in figure 14) and the mathematical model is established:

$$\dot{M}_{ig} + \dot{M}_p = \dot{M}_n + \dot{M}_c \tag{38}$$

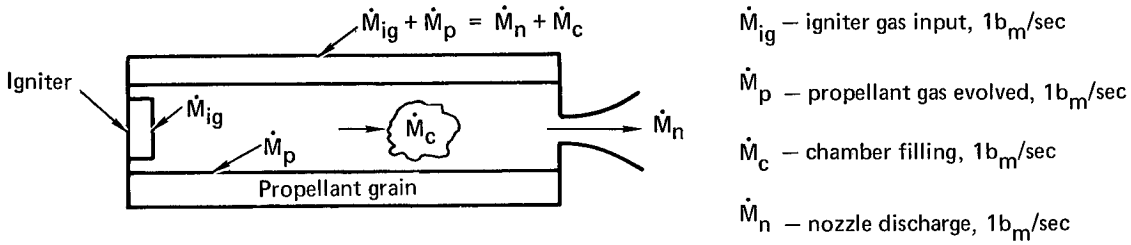

Figure 14.—Mass balance system.

Replacing the terms in the model with internal ballistic and thermodynamic relations results in

$$\dot{M}_{ig} + aP^n \rho A_b(t) = PA_t C_D \sqrt{\frac{g_c \gamma}{RT}\left(\frac{2}{\gamma+1}\right)^{\frac{\gamma+1}{\gamma-1}} + \frac{V}{RT}\frac{dP}{dt}} \tag{39}$$

where

P = motor chamber pressure, $lb_f/in.^2$
A_b = propellant burning surface, $in.^2$
a = propellant burning-rate constant
n = propellant pressure exponent
γ = propellant gas specific heat ratio
A_t = nozzle throat area, $in.^2$
C_D = nozzle discharge coefficient
V = motor free volume, $in.^3$
ρ = propellant density, $lb_m/in.^3$
R = propellant gas constant, $in.\text{-}lb/lb_m\text{-}°R$
T = propellant combustion temperature, °R
g_c = gravitational conversion constant, $in.\text{-}lb_m/lb_f\text{-}sec^2$

THIS DOCUMENT PROVIDED BY THE ABBOTT AEROSPACE
TECHNICAL LIBRARY
ABBOTTAEROSPACE.COM

Placing the terms in final form by solving for dP/dt yields

$$\frac{dP}{dt} = \frac{RT}{V}\left[\dot{M}_{ig} + aP^n \rho A_b(t) - PA_t C_D \sqrt{\frac{g_c \gamma}{RT}\left(\frac{2}{\gamma+1}\right)^{\frac{\gamma+1}{\gamma-1}}}\right] \tag{40}$$

when the following conditions are assumed:

(1) Gas temperature and pressure are uniform throughout the motor.
(2) Perfect gas laws are valid.
(3) Igniter gas has same temperature and heat capacity as propellant gas.
(4) Burning surface is a function of flame propagation rate $A_b(t)$.
(5) Only sonic conditions for nozzle discharge are present.

This analytical expression is recommended as the basis for computing the rate of pressure onset in a motor.

Because of specific limitations on how well the variables can be defined, several methods of varying accuracy and complexity have been developed for solution of this equation. The major differences in these methods are the treatment of the igniter mass discharge rate, the prediction of ignition lag time and flame spread rate $A_b(t)$, and the methods of solution. When the propellant burning surface is a known function of time, as determined experimentally from a scaleup of the motors or by similarity to existing motors, the method of solution provided in reference 34 is recommended.

Ignition lag time is computed on the basis of heat-transfer characteristics and the assumption of a fixed ignition temperature; however, it should be noted that igniter flow is assumed to be negligible. In large motors this solution has been relatively accurate in predicting the overall ignition transient where the important terms are $\dot{M}_n$ and $\dot{M}_p$. For small motors, however, or for motors with small free volume, $\dot{M}_{ig}$ may become significant or even dominant and must be included in the ignition transient. The analog computer programs discussed below incorporate this term. When the variation of burning surface with time is not known and cannot be estimated with sufficient accuracy, the method described in references 12, 131, and 132 is recommended. These references provide methods for computing the rate of flame propagation based on heat transfer to succeeding segments of the propellant grain. Relationships involved are solved numerically, using finite difference techniques, by the alternating direction method of Peaceman and Rachford (ref. 133) in conjunction with a digital computer.

The use of an analog computer for solution of the pressure transient equations as described in references 130, 134, and 135 is recommended for parametric studies of the effects of specific variables (e.g., free volume, igniter mass flow rate, nozzle throat area, etc.) on the ignition transient of a given rocket motor. In these methods, igniter mass discharge rate is introduced at the known rate (constant or exponential) by use of a diode function generator. The burning surface is also generated at a predetermined exponential rate by using a diode function generator.

THIS DOCUMENT PROVIDED BY THE ABBOTT AEROSPACE
TECHNICAL LIBRARY
ABBOTTAEROSPACE.COM

3.2.1.3 Release Rate Effects

The energy release rate of the igniter shall not produce excessive pressure peaks in the motor or strains in the propellant.

Excessive pressure peaks should be avoided by the careful matching of the gas content of the igniter combustion products with the free volume in the motor, the time to propellant ignition, and the relative extent of pressurization produced by the igniter as compared to the normal operating pressure of the motor. Methods for analytically predicting this pressurization are presented in section 3.2.1.2. If motor free volume is small and ignition rapid, excess pressurization should be prevented by reducing the igniter mass discharge rate and using an igniter charge having a low gas content, e.g., the Mg/Teflon formulation described in section 3.2.3.2.

Conversely, the igniter designer should be aware that a high gas output from the igniter may be essential where free volumes are large and the chamber filling process would be excessively long otherwise. Pressurization of successive elements in an ignition train may also be desirable to ensure rapid propagation. As previously explained, the ignitability of most pyrotechnics and propellants is highly pressure-dependent in the low pressure (less than atmospheric) range. For these applications, formulations having high impetus values (sec. 2.1.4) are recommended.

3.2.1.4 Ignition Shock

The rate of energy output shall be such that no ignition shock in excess of specified limits is produced.

To eliminate excessive ignition shock, the rate of pressurization of each successive element in the ignition train must be controlled. The use of powder or granulated materials having high burning velocities that approach detonation speeds should be held to a minimum. For designs using large quantities of high-burning-velocity materials in intermediate charges (greater than 1 gram, for example), the charge should be in pelleted rather than powdered form. The use of compositions that detonate rather than deflagrate should be held to the minimum while still obtaining reliable performance.

3.2.2 Pyrogens

3.2.2.1 Energy Output

The pyrogen energy release system shall satisfy criteria 3.2.1.1 *through* 3.2.1.4.

THIS DOCUMENT PROVIDED BY THE ABBOTT AEROSPACE
TECHNICAL LIBRARY
ABBOTTAEROSPACE.COM

For pyrogens, the heat flux and pressure necessary to obtain ignition and sustained combustion within the required time are usually expressed in terms of the mass flow rate. The simplest and most frequently used method is the mass discharge coefficient as described in section 3.2.1.1.4. This method is best used for design scaleup from subscale tests, or in very conventional designs where the consequences of failure are not catastrophic.

As described in section 3.2.1.1.6, it is more accurate to predict heat flux directly and relate this heat flux to the ignition energy requirement of the propellant at the pressure level induced by the igniter (sec. 3.2.1.1.3). However, the computations are more complex and require a knowledge of variables that are occasionally difficult to define. The most accurate and most expensive approach is to obtain actual heat flux and pressure measurements in a chamber simulating the internal configuration of the motor. Calorimeters used successfully to make these heat flux measurements are described in reference 99.

3.2.2.2 Propellant Characteristics

The pyrogen shall have maximum loading efficiency.

After the required mass flow rate and duration have been established, the grain configuration must be designed by conventional rocket motor ballistic techniques. To maintain the igniter weight and size at a minimum, the grain design must provide the required propellant surface area and web thickness within the smallest volume practical. Star or wagon wheel configurations normally are used to achieve desired high loading efficiency. A high-burning-rate propellant is recommended to reduce the required propellant surface area, though it may be beneficial to sacrifice this feature if use of the same propellant in the igniter and the motor results in improved processing or better compatibility. The propellant should be easily ignitable at low pressures and should produce an igniter chamber pressure higher than the operating pressure of the motor; pressures in the range of 1000 to 2000 psi are recommended for most applications. Grain webs greater than required for the minimum burning duration must be provided if they are necessary to obtain adequate propellant grain strength.

3.2.2.3 Energy Propagation

The ignition train of the pyrogen shall ensure rapid positive propagation of the energy from the initiator to the energy release system.

An intermediate charge should be provided when required to ensure propagation of the ignition train from the initiator to the pyrogen propellant grain. Pyrotechnic pellets of boron/potassium nitrate (sec. 3.2.3.2) are recommended because they ignite readily at very low pressures, burn rapidly, and have a high energy content. To ensure the most reproducible ignition of the pyrogen propellant, the pellets should be retained by a perforated basket or plate to direct the discharge of hot molten particles and gases on the propellant surface for a longer period of time.

THIS DOCUMENT PROVIDED BY THE ABBOTT AEROSPACE
TECHNICAL LIBRARY
ABBOTTAEROSPACE.COM

3.2.3 Pelleted Pyrotechnics

3.2.3.1 Energy Output

The energy release system for pelleted pyrotechnics shall satisfy criteria 3.2.1.1 *through* 3.2.1.4.

As in the case of pyrogens and other igniter types, the pelleted pyrotechnic igniter must be designed to provide the heat flux and pressure necessary to achieve ignition of the motor propellant. However, because steady-state burning conditions are seldom present and because ballistic performance is less reproducible than that of a pyrogen, a proposed design for a pyrotechnic igniter is less amenable to analysis than a proposed design for a pyrogen. Consequently, to establish the igniter parameters, designers have relied on the empirical correlations and relationships discussed in sections 3.2.1.1.1 through 3.2.1.1.5. The Bryan-Lawrence equation, which includes consideration of more of the pertinent variables, is recommended for general application. However, as discussed in section 3.2.1.1.6, heat flux values, when estimated with sufficient accuracy or measured directly, provide the most precise determination of the required igniter energy release.

3.2.3.2 Pyrotechnic Characteristics

The pyrotechnic formulation selected for use in an igniter shall have the characteristics listed below:

(1) *The pyrotechnic composition shall be readily ignitable over the environmental range required by the application.*
(2) *The exhaust products of the composition shall produce the pressurization required to meet the rocket motor ignition objectives.*
(3) *The pyrotechnic composition shall be nonhygroscopic or adequately protected against moisture absorption.*
(4) *The pyrotechnic composition shall have the burning-rate properties required to achieve the necessary energy output rate without overpressuring the igniter hardware.*
(5) *The pyrotechnic composition shall have sufficient available energy to produce the energy output rate required for motor ignition.*
(6) *The energy output of the composition shall be such that efficient transmittal of its energy to the propellant surface is achieved.*

THIS DOCUMENT PROVIDED BY THE ABBOTT AEROSPACE
TECHNICAL LIBRARY
ABBOTTAEROSPACE.COM

After establishing the igniter energy release requirements for a pelleted pyrotechnic igniter, the designer must select a formulation and configuration. The following formulations are recommended for use in pelleted igniters, with limitations as discussed:

(1) B-KNO_3—Boron, 23.7 percent; potassium nitrate, 70.7 percent; binder, 5.6 percent. Characterized by ease of ignition at very low pressures (high altitudes), high gas content, and low sensitivity of burning rate to pressure. More sensitive to moisture than the other formulations, but considerably less than black powder. Composition defined by Bureau of Naval Weapons Specification OS-9765, Drawings 458505 and 657421 (ref. 136).

(2) Alclo—Aluminum, 35.0 percent; potassium perchlorate, 64.0 percent; vegetable oil, 1.0 percent. High energy content, but difficult to ignite at low pressures. Burning rate strongly pressure-dependent. Composition defined in Bureau of Naval Weapons Specifications OS-9833 (ref. 137) and OS-9878 (ref. 138).

(3) Mg/Teflon—Basic composition prepared in variety of formulations and configurations; three examples listed below. Generally characterized by very low pressure burning-rate exponents and a low percentage of permanent gas content; efficient igniters, having energy output strong in the infrared region. Energy content approximately equivalent to that of B-KNO_3.

Composition						Application
Magnesium		Teflon		Other		
Spec	%	Type	%	Material	% Max	
MIL-P-14067 (ref. 139)	60.0	5	40.0	Graphite	1	Polaris
JAN-M-382 (ref. 140)	32.5	L-P-403 (ref. 141)	67.5	Additives	2	PHOENIX
JAN-M-382 (ref. 140)	54.0	MIL-M-14077 (ref. 142)	30.0	Viton	16	SIDEWINDER (extruded grain)

A comprehensive treatment on the theory and application of pyrotechnics is provided in reference 143. Other formulations, as well as more extensive information on those above, are discussed in the references included in the dossier.*

*Dossier for Design Criteria Monograph on Solid Rocket Motor Igniters. Unpublished, 1968. Collected source material available for inspection at the NASA Lewis Research Center, Cleveland, Ohio.

THIS DOCUMENT PROVIDED BY THE ABBOTT AEROSPACE
TECHNICAL LIBRARY
ABBOTTAEROSPACE.COM

3.2.3.3 Configuration

The pyrotechnic configuration shall (1) provide a ratio of surface area to igniter chamber vent area that prevents gas blockage within the chamber and (2) minimize breakage and attrition of the pellets.

To determine analytically the pressure-time performance of pelleted pyrotechnic igniters, the methods described in references 18 and 128 should be used. Reference 128 describes a specific approach for use with cylindrical pellets of a boron–potassium nitrate formulation, and should be used where these conditions apply. Reference 18 presents a more general method that can be applied to other formulations, and includes form functions for use with pellets in cylindrical, perforated cylindrical, or aspirin configurations. However, because this type of igniter does not normally attain equilibrium operations, the accuracy of the above analytical expressions is limited. Therefore, it is recommended that the design be confirmed by experimental evaluation before actual use for rocket motor ignition.

The use of cored, cylindrical pyrotechnic pellets loaded in a specific orientation with respect to the initiator (fig. 8) is recommended as an effective way to provide gas flow, minimize hardware requirements, prevent attrition from relative grain movement, and obtain controlled ratio of burning surface to vent area.

An alternate approach, recommended where the above method cannot be used because of igniter size, space limitations, etc., is to put a perforated tube through the center of the igniter. The energy from the intermediate charge is distributed to the main charge through the perforations, and gas flow blockage is eliminated. Pellets pressed in cylindrical forms are less susceptible to breakage and attrition and are recommended for this approach.

3.3 Hardware

3.3.1 Initiation System

3.3.1.1 Pressure Seals and Insulation

When an electrical initiator is inserted directly in the motor case, both pressure seal and insulation for the electrically conductive pins or leads shall be adequate for the application.

When an electrical initiator or igniter becomes a structural member of the pressure vessel, glass, ceramic, or other dielectric materials must be used to provide the required pressure seal and insulation. Key considerations in designing such a header are

(1) The dielectric must either "wet" and adhere to the metal pins and housing during fusion, or must be brazed to these components.

THIS DOCUMENT PROVIDED BY THE ABBOTT AEROSPACE
TECHNICAL LIBRARY
ABBOTTAEROSPACE.COM

(2) The dielectric and the metal components must have matched coefficients of thermal expansion.
(3) The glass or ceramic used must not "boil" during the fusing process.
(4) The dielectric properties must be sufficient to withstand the required voltage.
(5) Density and mechanical properties must be adequate for the pressure, temperature, and shock conditions imposed.

Specific details of the materials and processes involved in seal fabrication frequently are not available to the designer; thus selection must be based on experience and consultation with the supplier. References 46 and 144 contain data on glass and ceramic materials for high-temperature applications, and reference 60 contains design guidelines for high-voltage applications.

3.3.1.2 Housing Material

Initiator housing materials shall have the basic properties required by any structural material that must be machined to close tolerances.

A free-machining steel, e.g., B1113 or an iron-nickel-cobalt alloy, is recommended for use with fusion glass seals. The oxides of these metals adhere to glass at fusion temperatures; have a satisfactory hardness, toughness, ductility, and machinability for most applications; are readily available at low cost; and have good electroplating and organic finishing characteristics.

In some applications, however, the strength of the above materials is not adequate. The use of stainless steels is recommended when this condition exists. These steels provide higher strengths and are inherently resistant to corrosion. It is, however, difficult to bond these steels to dielectric seal material; a metallized ceramic brazed to the stainless steel body should be used.

Recommendations applying specifically to TB1 housings are provided in section 3.1.3.1.

3.3.1.3 Housing Capability

The charge housing shall contain the combustion products without rupturing.

The magnitude and duration of applied pressure that an initiator body must withstand without rupturing should be determined as described in section 3.1.4. The material thickness required to contain this pressure with the specified margin of safety should then be determined by stress analysis. The root dimensions on external threads, thread reliefs, undercuts for seals, and the concentricity of these features with the internal charge cavity of the housing are points of particular concern because they establish the minimum wall thickness.

THIS DOCUMENT PROVIDED BY THE ABBOTT AEROSPACE
TECHNICAL LIBRARY
ABBOTTAEROSPACE.COM

3.3.1.4 Housing Closure

The method of closure for an initiator housing shall be such that no objectionable particles are ejected. Where sealing under vacuum conditions is required, the seal shall be hermetic.

When an initiator must be hermetically sealed, closures should be projection, heliarc, or stitch welded if the material is weldable. Soldering is an acceptable alternate where the closure is fabricated from readily solderable materials (e.g., lead or tin). When sealing under hard vacuum conditions is not a requirement (hermetic seal not required), crimping the closure in place with an adhesive bead applied under the crimp and a sealant overcoat is recommended as a more economical method of closure. A medium castor oil–modified alkyd resin base sealant is recommended.

Lead is recommended as a closure where it is desirable to have the closure ejected in the form of small molten particles rather than fragments. For absolutely no ejecta, steel closures should be used with the disc coined to provide petaling. Aluminum closures are preferred where ejecta are of no particular concern.

3.3.2 Energy Release System

3.3.2.1 Adapters

3.3.2.1.1 Capability

Adapters (or bodies) mounted in the motor case shall withstand internal operating pressures and temperatures during igniter and motor operation.

A high-strength steel, e.g., type 4130, has proven to be the most desirable material for the adapter. More exotic lightweight materials, e.g., aluminum or reinforced plastics, can be used to advantage where weight is of premium importance. Further weight advantages, at added expense, can be obtained by insulating the internal side of the adapter, thus reducing the required metal thickness.

3.3.2.1.2 Sealing

The seal between the igniter adapter and the mating boss in the motor case shall be positive under all conditions of use.

THIS DOCUMENT PROVIDED BY THE ABBOTT AEROSPACE
TECHNICAL LIBRARY
ABBOTTAEROSPACE.COM

For most applications the recommended type of seal betwen the adapter and the igniter boss is an O-ring. Close adherence to design specifications for O-ring size and material and for size, tolerance, and finish of O-ring seating surfaces, is imperative for proper seal performance. Where pressures and diametral clearance are high enough to present an extrusion problem (as determined by reference to pertinent design specifications) backup rings must be used. Adequate protection from propellant gas temperatures is also necessary, since most O-rings cannot withstand the heat. Where this protection is not feasible, metallic seals or copper asbestos gaskets should be used. When seals of this type are used in conjunction with threaded joints, torque requirements should be specified.

3.3.2.1.3 Corrosion Resistance

The igniter adapter shall withstand corrosive environments.

Corrosion-resistant steels are recommended. When it is not feasible to use corrosion-resistant steel, cadmium plating of steel adapters is recommended except where adverse reactions with propellants or other chemical ingredients may result.

3.3.2.1.4 Interface Orientation

When igniters must be in a specific radial location with respect to other motor components, the adapter shall have an oriented closure.

The requirement that the igniter must be oriented in a specific radial location may stem from the mating provisions (e.g., safe/arm actuators) or from location of igniter exhaust plume with respect to the propellant surface. Bolted flange closures are recommended.

If the boss is small, a cap ring can be used effectively. Where space is at a premium, snap rings or landed threads may be used as attachment methods.

3.3.2.1.5 Interface Connections

The adapter shall incorporate suitable openings and bosses for insertion of initiators and for connection with other mating components as required.

The design of the initiation system determines the necessity for openings and the mating dimensions required. Provisions for measuring pressure within the igniter chamber, at least through the qualification phase, are recommended because the igniter chamber pressure and ballistic performance can thus be evaluated independently.

THIS DOCUMENT PROVIDED BY THE ABBOTT AEROSPACE
TECHNICAL LIBRARY
ABBOTTAEROSPACE.COM

3.3.2.2 Chambers

3.3.2.2.1 Pelleted Igniter

3.3.2.2.1.1 *Small-Pellet Chambers*

For charges comprising small pellets, the pellet chamber shall possess structural strength and perforation size adequate to retain the pellets for the major portion of their burning time (unrestricted venting).

When the main charge comprises small pellets (usually $<\frac{3}{8}$-in. diam.), the quantity of material is controlled by weight. Thus, only indirect controls are imposed on the pressures, which are usually less than 250 psi. The vent area of the igniter container should be at least 40 percent of the total basket area. The size of the openings must be small enough to retain the pellets until 75 percent of the pellet weight is consumed. Perforated steel plate is the case material recommended for most applications. However, where particle ejecta are not critical and ignition requirements are not too restrictive, wire mesh should be used as a less expensive container. Molded filament-reinforced perforated plastic is recommended when consumption of the container during firing is desired.

3.3.2.2.1.2 *Large-Pellet Chambers*

For larger formed grains, the chamber vent area shall be related to the pyrotechnic burning surface to give the required ballistic performance (restricted venting).

To obtain closer control of ballistic performance and better direction of igniter energy efflux, a pyrotechnic is formed in large pellets and retained in a chamber having a vent area specifically related to the grain burning surface. In these igniters, very high pressures are common, generally ranging from 1000 to 10,000 psi. High strength materials are required to protect against case rupture. The use of steel is recommended, but filament reinforced plastics can be used if ncessary to eliminate steel ejecta. As in the case of pyrogens, in certain applications, these chambers can be protected by external insulation so that they can be retained in the motor for the duration of its operation.

3.3.2.2.1.3 *Chamber Seal*

The chamber seal shall protect moisture-sensitive or hygroscopic pyrotechnics from moisture.

For perforated steel or plastic chambers, moisture-resistant plastic film liners bonded internally to the chamber wall or heat-shrinkage plastic tubing bonded externally provide effective moisture barriers and should be used. For wire mesh baskets, dip coatings of rubber or moisture-resistant plastics are preferred. An alternate procedure, applicable to either kind of chamber, is to seal the entire charge in moisture-resistant plastic bags.

THIS DOCUMENT PROVIDED BY THE ABBOTT AEROSPACE
TECHNICAL LIBRARY
ABBOTTAEROSPACE.COM

3.3.2.2.1.4 *Pellet Protection*

Igniter charges shall not experience excessive attrition or breakage resulting from vibration or shock.

Pyrotechnic pellets or grains must be tightly packed to prevent movement relative to each other or to other components. Consumable resilient materials chemically compatible with the pyrotechnic and capable of withstanding environmental conditions are recommended for packing. Liners applied to the internal surface of the igniter chamber for moisture protection also assist in reducing attrition by preventing contact of the pyrotechnic with sharp edges in the chamber.

3.3.2.2.1.5 *Flame Spread and Gas Flow*

The chamber shall provide for adequate flame spread and gas flow through the pyrotechnic charge.

Pellets that are packed tightly in deep beds can cause significant blockage to the flow of combustion products. This blockage can be eliminated, and more positive ignition obtained, by the use of small perforated tubes, as shown in the center of the chamber in figure 9. The tubes provide a means for dispersion of the ignition energy from the initiator throughout the main charge. When larger, cored pellets are used, the center cores can be aligned in the chamber to form an effective tube of their own (fig. 8).

3.3.2.2.2 Pyrogen

3.3.2.2.2.1 *Chamber*

The pyrogen chamber shall contain the pyrogen products at its operating pressure and temperature for the duration of ignition.

The pyrogen case must contain the igniter pressure for the duration of ignition even when subjected to the motor internal flame temperatures or exhaust stream. Steel and resin-bonded glass filament windings are the primary materials recommended for pyrogen cases. Steel, preferred where weight is not critical and the igniter hardware can be retained for the duration of motor operation, is less expensive and can withstand higher temperatures. The propellant grain can normally be cast directly into the steel case.

When lighter weights are necessary, glass-filament-wound cases should be used. This type of case must either be consumed without the expulsion of objectionable ejecta or be insulated externally so that it can be retained during the firing. The preferred practice with these cases is to cast the propellant in a cartridge of compatible material and then wind an integral case around the grain assembly, the forward and aft closures, and the nozzle components.

THIS DOCUMENT PROVIDED BY THE ABBOTT AEROSPACE
TECHNICAL LIBRARY
ABBOTTAEROSPACE.COM

3.3.2.2.2.2 *Chamber Seal*

The pyrogen chamber seal shall protect the propellant grain from moisture and other contaminants.

Two primary seal areas must be protected from moisture or other contaminants: points of attachment to the adapter, and nozzle ports.

When the chamber is bolted, threaded, or pinned to the adapter, a conventional O-ring or gasket seal of appropriate material should be used. When the attachment must be relatively permanent (e.g., welded or brazed), the seal must be hermetic as verified by X-ray or by leak test.

Nozzle ports should be sealed with heat-sealable plastic or welded thin metal closures; either type should burst at less than igniter operating pressure. To prevent inadvertent mechanical damage, the very thin closures should be protected by foam plugs or covers foamed in place or pre-formed and bonded.

3.3.2.2.2.3 *Nozzle Erosion Resistance*

A pyrogen nozzle shall be sufficiently resistant to erosion to give the required ballistic performance.

Nozzle inserts of graphite or erosion-resistant plastic composites normally are required but may be eliminated when igniters have very short burning times ($<$100 msec). However, erosion of the nozzle throat is not as critical as in conventional motors, since pyrogens are usually designed to be regressive burning.

3.3.2.2.2.4 *Nozzle Number and Angle*

The number of nozzles and the angle of vent shall provide the most efficient transfer of energy to the propellant surface.

In conventional grain designs, more effective ignition with forward end mounted igniters is achieved when canted nozzles are used rather than axial nozzles. The cant angle should be selected to provide the most effective energy transfer to the propellant surface without inducing excessive erosion of the motor propellant surface. Multiports for canted nozzles provide better distribution of energy to the propellant, while the desired number of nozzles to be used is dictated by the internal port configuration of the motor. For igniters mounted in the nozzle exit-cone area (aft-end ignition) more effective ignition is achieved by single, axially exhausting nozzle throats.

THIS DOCUMENT PROVIDED BY THE ABBOTT AEROSPACE
TECHNICAL LIBRARY
ABBOTTAEROSPACE.COM

3.4 Design Proof Testing

3.4.1 Initiators

3.4.1.1 Firing Sensitivity

The initiator shall be tested to determine its sensitivity to an initiating impulse.

To evaluate compliance with specified firing energy requirements, the Bruceton Staircase Method (ref. 94) is recommended. Although the subject of considerable debate, the Bruceton Method has proven to be the most durable and generally accepted method developed to date. Test results, however, should be evaluated with full consideration of limitations (as previously discussed); and the number of tests must be consistent with the required reliability level.

The variation of ignition delay time as a function of the input stimulus should be determined by increasing the input levels in discrete intervals, starting with the minimum no-fire level determined above, until the maximum anticipated energy level available is reached. This level should then be used to establish the recommended limits for firing energy input. If the interpretation of delays at small time intervals is desired, the results should be plotted on log-log paper.

3.4.1.2 Bridge Resistance

Each bridge in electrically actuated initiators shall be tested to determine its resistance.

An initiator that does not contain a bridge-circuit gap or voltage-blocking device should have the resistance of each bridge circuit measured using a current that is less than 10 percent of the maximum no-fire current and is less than 0.010 ampere (in all cases). The method described in MIL-STD-202, Method 303 (ref. 145), is recommended except that the measurement should be made at or corrected to 70° F. Test equipment producing a high-voltage discharge is required to determine the bridge-circuit resistance of an initiator containing a bridge-circuit gap or voltage-blocking device, but the current should be limited to less than 10 percent of the maximum no-fire current through the use of current-limiting resistors.

3.4.1.3 Induced Current Sensitivity

The initiation system shall be tested to evaluate its susceptibility to accidental ignition from current induced through electromagnetic radiation.

THIS DOCUMENT PROVIDED BY THE ABBOTT AEROSPACE
TECHNICAL LIBRARY
ABBOTTAEROSPACE.COM

Where facilities are available, testing simulated initiators under conditions of actual application is recommended, using methods of measurement equivalent to those described in reference 96. When this testing cannot be accomplished, the design, the component, and the anticipated environment of the initiator should be analyzed by the methods described in NAVWEPS OD 30393 (ref. 65).

3.4.1.4 Electrostatic Discharge Sensitivity

The initiation system shall be tested to evaluate its sensitivity to electrostatic discharge.

To determine whether an initiator is excessively sensitive to an electrostatic discharge, a 500 pF capacitor charged to 25,000 volts and a 5000-ohm resistor should be connected in series between shorted pairs of pins or leads in all combinations and between the shorted pins or leads and the case. The initiator should remain connected to the specified terminals for a minimum of 60 seconds. When conducting this test, precautions must be taken to ensure that the test is not adversely affected by corona, stray capacitance and inductance losses, switch bounce and arcing, and surface losses at connector interfaces. Each of the above combinations should also be tested by the application of 500 volts dc, as described in MIL-STD-202, Method 301 (ref. 145), to determine if the initiator meets the dielectric-withstanding voltage requirements.

3.4.1.5 Calorific Output

The initiation system shall be tested to determine compliance with requirements for calorific output.

Procedure 1 of reference 98 should be used to determine the capability of the initiation system to supply the required calorific output.

3.4.1.6 Pressure Output

The initiation system shall be tested to determine compliance with requirements for pressure output.

Procedure 2 of reference 98 should be used to verify that the initiation system will produce the required pressure.

THIS DOCUMENT PROVIDED BY THE ABBOTT AEROSPACE
TECHNICAL LIBRARY
ABBOTTAEROSPACE.COM

3.4.1.7 Heat Flux Output

The initiation system shall be tested to determine compliance with requirements for heat flux output.

Procedure 3a of reference 98 should be used to verify that the initiation system will produce the required heat flux output.

3.4.2 Energy Release System

3.4.2.1 Pyrogens

Energy release systems using pyrogens shall have the pyrogen propellant tested to determine compliance with requirements for burning rate and physical properties.

The burning rate of pyrogen propellants can be determined by the method defined in Bureau of Naval Weapons Procedure OD 28715 (ref. 146). The tensile stress, modulus, and elongation of propellant should be determined by the procedure provided in reference 147.

3.4.2.2 Pyrotechnics

Energy release systems using metal-oxidant pyrotechnic mixtures shall have these mixes tested to determine compliance with requirements for heat of explosion, burning rate, and physical properties.

The heat of explosion of pyrotechnic mixes should be determined by the method defined in Bureau of Ordnance Standard OD 9375 (ref. 113). Crush strength of pressed pyrotechnic grains should be determined on equipment having a controlled rate of force application, the required force capacity, and sufficient accuracy to provide sensitive data. One of the following three (or other fully equivalent) test machines should be used for testing:

(1) Instron Engineering Corporation Compressive Test Instrument, Model TTB
(2) Machine Assembly, Pellet Crush Strength, Bureau of Naval Weapons, Drawing SA-492490
(3) F. J. Stokes Machine Company Pellet Hardness Tester

No well-defined, generally acceptable procedure for determining burning rate of pyrotechnic propellants is available. Thus the development of a suitable ballistic test for burning pellets in a controlled-pressure closed chamber, applicable to the specific pellets involved, is recommended.

THIS DOCUMENT PROVIDED BY THE ABBOTT AEROSPACE
TECHNICAL LIBRARY
ABBOTTAEROSPACE.COM

3.4.3 Hardware

3.4.3.1 Structural Adequacy

The igniter hardware shall be tested to determine its structural adequacy.

The capability of the igniter to contain the pressures generated within the igniter chamber or within the rocket motor, whichever is more severe, should be evaluated by pressure testing with gaseous nitrogen. All potential leak paths and seals should be monitored for evidence of leakage. Compliance with specified margins of safety should be demonstrated by testing to failure one or more complete hardware assemblies, less all explosives, propellants, or pyrotechnics, using hydraulic oil as the pressurizing medium.

3.4.3.2 Corrosion Resistance

The igniter hardware shall be tested to evaluate its susceptibility to corrosion.

The assembled igniter hardware should be subjected to the salt spray test as defined in MIL-STD-331, Method 107 (ref. 4).

3.4.3.3 Moisture Resistance

The igniter hardware shall be tested to determine whether moisture-sensitive components are adequately protected.

The complete igniter should be subjected to the temperature and humidity tests as defined in MIL-STD-331, Method 105 (ref. 4).

3.4.3.4 Environmental Capability

The igniter hardware shall be tested to determine its capability of satisfactorily withstanding the environments to which it will be subjected.

Evaluation of the igniter hardware under each of the environments imposed is recommended. A list of typical environments is provided in table I and may be used as a reference list. However, as discussed in section 2.0.1.3, the designer is cautioned against arbitrarily specifying the listed environments without first determining whether they are applicable to, and will meet the needs of, his particular application.

3.4.4 Complete Igniters

3.4.4.1 Pyrogen Pressure-Time Performance

Pyrogen igniters shall be tested to determine compliance with internal operating pressure-time performance requirements.

THIS DOCUMENT PROVIDED BY THE ABBOTT AEROSPACE
TECHNICAL LIBRARY
ABBOTTAEROSPACE.COM

Compliance of pyrogen igniters with ballistic performance requirements should be determined by measuring the pressure within the pyrogen chamber as a function of time when the igniter is fired in the open or in a simulated motor.

3.4.4.2 Pyrotechnic Pressure-Time Performance

Pyrotechnic igniters shall be tested to determine compliance with pressure-time requirements for closed or vented chamber firings.

Compliance of pyrotechnic igniters with ballistic performance requirements should be determined by firing the igniter in a closed chamber or a vented chamber and measuring the pressure produced as a function of time. Careful cleaning and maintenance of the internal chamber condition are essential to obtaining accurate test data.

3.4.4.3 Igniter Heat Flux Output

Igniters shall be tested to determine compliance with heat flux output requirements.

Specific equipment and test methods for the determination of heat flux output from igniters should be designed to simulate motor conditions. However, the methods described in reference 99 are recommended as general guidelines for the design of equipment capable of obtaining these data.

THIS DOCUMENT PROVIDED BY THE ABBOTT AEROSPACE
TECHNICAL LIBRARY
ABBOTTAEROSPACE.COM

REFERENCES

1. Anon.: Initiator, Electrical Design and Evaluation of. Military Specification MIL-I-23659, Rev. B, Amend. no. 1, May 17, 1967.

2. Anon.: Basic Evaluation Test for Use in Development of Electrically Initiated Explosive Components for Use in Fuzes. Military Standard MIL-STD-322, Oct. 15, 1962.

3. Anon.: Environmental Testing—Aeronautical and Associated Equipment, General Specification for. Military Specification MIL-E-5272, Rev. C, Amend. no. 1, Jan. 20, 1960.

4. Anon.: Fuze and Fuze Components, Environmental and Performance Test for. Military Standard MIL-STD-331, Change 3, Jan. 10, 1966.

5. Price, E. W.; Bradley, H. H.; Dehority, G. L.; and Ibiricu, M. M.: Theory of Ignition of Solid Propellant. NOTS TP 3954, Naval Ordnance Test Station, Mar. 1966.

6. Hicks, Bruce L.: Theory of Ignition Considered as a Thermal Reaction. J. Chem. Phys., vol. 22, no. 3, Mar. 1954, pp. 414-429.

7. McAlevy, R. F.; Cowan, P. L.; and Summerfield, M.: The Mechanism of Ignition of Composite Solid Propellants. Vol. I—Progress in Astronautics and Rocketry. Academic Press, Inc., 1960.

8. Hermance, C. E.; Shinnar, R.; and Summerfield, M.: Ignition of an Evaporating Fuel in a Hot, Stagnant Gas Containing an Oxidizer. AIAA J., vol. 3, no. 9, Sept. 1965, pp. 1584-1592.

9. Summerfield, M.; et. al.: A Critical Review of Recent Research on the Mechanism of Ignition of Solid Rocket Propellants. Report 661, Princeton Univ., Aug. 26, 1963.

10. Summerfield, Martin, and McAlevy, R. F., III: The Shock Tube as a Tool for Solid Propellant Ignition Research. Jet Propulsion, July 1958, pp. 478-481.

11. Anderson, R.; Brown, R.; Thompson, G.; and Ebeling, R.: Theory of Hypergolic Ignition of Solid Propellants. Paper 63-514 presented at AIAA Heterogeneous Combustion Conference (Palm Beach, Fla.), Dec. 13, 1963.

12. Jensen, G. E.; and Cose, D. A.: Studies in Ignition and Flame Propagation of Solid Propellants. Report UTC 2117-FR, United Technology Center, June 1966.

13. Carlson, L. W.; and Seader, J. D.: A Study of the Heat Transfer Characteristics of Hot Gas Ignition. AFRPL-TR-65-158, Air Force Rocket Propulsion Lab., June 1965.

14. Wrubel, J. A.; and Carlson, L. W.: Study of Heat Transfer Characteristics of Hot Gas Igniters. Final Report TR-67-267, Research and Technical Div., Air Force Rocket Propulsion Lab., July 1967.

15. Mullis, B.; and Channapragada, R. S.: Heat Transfer Studies of Solid Rocket Igniters. Report UTC-2096-FR, United Technology Center, Nov. 13, 1967.

THIS DOCUMENT PROVIDED BY THE ABBOTT AEROSPACE
TECHNICAL LIBRARY
ABBOTTAEROSPACE.COM

16. Kilgroe, J. D.: Studies on Ignition and Flame Propagation of Solid Propellants. Report UTC 2229-FR, United Technology Center, Nov. 13, 1967.

17. Lovine, R. L.; and Fong, L. Y.: Wing VI Minuteman Ignition Study. Tech. Memo SRP-249, Aerojet-General Corp., Apr. 1964.

*18. Paul, B. E.; and Lovine, R. L.: Ignition Problems in Solid Propellant Rockets. Aerojet-General Corp., Feb. 1965.

19. Bastress, E. K.; and Niessen, W. R.: Solid Propellant Ignition by Convective Heating. AFOSR-67-0932, Arthur D. Little, Inc., Oct. 1966.

20. Keller, J. A.: Ignition of Ammonium Perchlorate-Based Propellants by Convective Heating. AF Grant (AFOSR 40-63 and 64), Univ. of Utah, Aug. 1, 1966.

21. Grant, Edwin H.; and Wenograd, Joseph: Research on Solid Propellant Ignitability and Igniter Characteristics. Report 662, Princeton Univ. Oct. 1963.

22. McAlevy, R. F., III; and Summerfield, M.: Ignition of Double Base Solid Rocket Propellants. ARS J., vol. 32, no. 2, Feb. 1962, pp. 270-273.

23. Fishman, Norman: Solid Propellant Ignition Studies. AFRPL-TR-65-213, Stanford Research Institute, Nov. 5, 1965.

24. Brown, R. S.: Investigation of Fundamental Hypergolic Ignition Phenomena Under Dynamic Flow Environments. Report UTC-2024-FR, United Technology Center, Feb. 25, 1965.

25. Fleming, R. W.: Ignition Studies. Bermite Powder Co., Report 383, Mar. 17, 1964 (Confidential); Report 471, May 17, 1965 (Confidential); Report 617, June 19, 1967 (Confidential).

26. Bastress, E. K.; et al.: Solid Propellant Ignition Studies. RPL-TDR-64-65, Air Force Flight Test Center, Oct. 30, 1964 (Confidential).

27. Miller, C. L.: Fundamental Investigation of Hypergolic Ignition for Solid Propellants. Report UTC 2018-FR, United Technology Center, Dec. 15, 1963 (Confidential).

28. Shannon, Larry J.: Composite Solid Propellant Ignition Mechanisms. UTC-2138-ASR-2 (AFOSR 67-1765), United Technology Center, Sept. 1967.

29. Ohlemiller, T. J.; and Summerfield, M.: A Critical Analysis of Arc-Image Ignition of Solid Propellants. Report 789, Princeton Univ., July 1967.

30. Evans, G. W.; et al.: A Statistical Design and Analysis of Sensitivity Experiments. Tech. Report 001-67, Stanford Research Institute, Jan. 6, 1967.

31. Moore, D. B.; and Evans, M. W.: Ignition of Solid Rocket Propellant Surfaces. Final Report (Contract NAS7-456), Stanford Research Institute, May 31, 1967.

*Dossier for Design Criteria Monograph on Solid Rocket Motor Igniters. Unpublished, 1968. Collected source material available for inspection at NASA Lewis Research Center.

THIS DOCUMENT PROVIDED BY THE ABBOTT AEROSPACE
TECHNICAL LIBRARY
ABBOTTAEROSPACE.COM

32. Niessen, W. R.; and Bastress, E. K.: Solid Propellant Ignition Studies. Final Report AFRPL-TR-66-32, A. D. Little, Inc., Feb. 1966.

33. Keller, J. A.; Richardson, C. P.; and Baer, A. D.: Propellant Ignition by Convective Heat Fluxes. Final Technical Report (Contract N60530-9060), Univ. of Utah, June 28, 1963-Sept. 30, 1964.

34. Ryan, Norman W.: Ignition and Combustion of Solid Propellants. Technical Report (AFOSR 67-1901), Univ. of Utah, Oct. 1, 1965-Sept. 30, 1966.

35. Anon.: Ordnance Explosive Train Designer's Handbook. Report NOL-R-1111, Naval Ordnance Lab., Apr. 1952.

36. Pollard, F. B.; and Arnold, J. H., Jr.: Aerospace Ordnance Handbook. Prentice-Hall, Inc., 1966.

37. Lewis, Donald: Laser Energized Explosive Device System. Report 5EED-67, Fifth Symposium of Electroexplosive Devices, The Franklin Institute, June 13-14, 1967.

38. Anderson, R.; et al.: Theoretical Experimental Investigations of Ignition Systems for Very Large Solid-Propellant Motors. Report UTC-2012-FR2, United Technology Corp. May 1963 (Confidential).

39. Forney, H. B.; Clark, W. J.; and Line, L. E., Jr.: The Use of Thermoelectric Materials in Electrical Initiators. Final Report TP-183, Texaco Experiment, Inc., Oct. 31, 1961.

40. Kluge, J. E.: Thermal Runaway Adds to Safety. Electrical Design News, Sept. 3, 1968.

41. Stresau, R. H.; Peterson, R.; and Chamberlain, D.: Electrical and Thermal Considerations in the Design of Electroexplosive Devices. Report 5EED-67, Fifth Symposium on Electroexplosive Devices, The Franklin Institute, June 13-14, 1967.

42. Rosenthal, L. A.: Electro-Thermal Equations for Electro-Explosive Devices. NAVORD-R-6684, Naval Ordnance Lab., Aug. 15, 1959.

43. Rosenthal, L. A.: Electrothermal Measurements of Bridgewires Used in Electroexplosive Devices. IEEE Transactions on Instrumentation and Measurement, vol. 1M-12, no. 1, June 1963.

44. Rosenthal, L. A.: Nonlinear Bridge for Measuring Electrothermal Characteristics of Bridgewires. NOLTR 62-205, Naval Ordnance Lab., June 1963.

45. Ayres, J. N.; Rosenthal, L. A.; and Maio, R. A.: A Low-Frequency Thermal Follow Bridge for Measuring the Electro-Thermal Parameters of Bridgewires. NOLTR 66-113, Naval Ordnance Lab., Mar. 1967.

46. Anon.: Solid Propellant Igniter Design Handbook. NAVWEPS Report 8015, Bureau of Naval Weapons, Apr. 12, 1961 (Confidential).

47. Massey, J. M., Jr.: A Heat Transfer Model Study of the Hot Wire Initiator. Report NWL-R-1919, Naval Weapons Lab., July 1964.

THIS DOCUMENT PROVIDED BY THE ABBOTT AEROSPACE
TECHNICAL LIBRARY
ABBOTTAEROSPACE.COM

48. Montgomery, R. L.: An Investigation of the Steady State Equations of the Hot Wire Initiator. Report NWL-T-10-64, Naval Weapons Lab., June 1964.

49. Chace, W. G.; and Moore, H. K.: Exploding Wires. Plenum Press, Inc., 1959.

*50. Schreiber, O. W.: Exploding Bridgewire Systems for Spacecraft Application. Report GPI L/S U-676, General Precision, Inc., Nov. 1961.

51. Leopold, H. S.: Initiation of Explosives by Exploding Wires. I: Effect of Circuit Inductance on the Initiation of PETN by Exploding Wires. NOLTR 63-159, Naval Ordnance Lab., May 15, 1963.

52. Leopold, H. S.: Initiation of Explosives by Exploding Wires. II: Effect of Circuit Resistance on the Initiation of PETN by Exploding Wires. NOLTR 63-244, Naval Ordnance Lab., May 15, 1963.

53. Leopold, H. S.: Initiation of Explosives by Exploding Wires. III: Effect of Wire Diameter on the Initiation of PETN by Exploding Wires. NOLTR 64-2, Naval Ordnance Lab., Mar. 1964.

54. Leopold, H. S.: Initiation of Explosives by Exploding Wires. IV: Effect of Wire Length on the Initiation of PETN by Exploding Wires. NOLTR 64-61, Naval Ordnance Lab., May 1964.

55. Leopold, H. S.: Initiation of Explosives by Exploding Wires. V: Effect of Wire Material on the Initiation of PETN by Exploding Wires. NOLTR 64-146, Naval Ordnance Lab., Oct. 1964.

56. Leopold, H. S.: Initiation of Explosives by Exploding Wires. VI: Further Effects of Wire Material on the Initiation of PETN by Exploding Wires. NOLTR 65-1, Naval Ordnance Lab., Mar. 1965.

57. Zeman, Samuel: Final Report, Exploding Bridgewire Initiator Development. Report 5-62, Thiokol Chemical Corp., Feb. 9, 1952.

58. Leopold, H. S.: Initiation of Explosives by Exploding Wires. X: Capacitance–Voltage Relationships for the Initiation of PETN by Exploding Wires. NOLTR 66-188, Naval Ordnance Lab., Apr. 1967.

59. Graves, A. E.: Final Report, Exploding Bridgewire Initiator Design Improvement. Report 56-57, Thiokol Chemical Corp., Aug. 29, 1967.

60. Bryla, T. N.: Feasibility Study of a Stand-Off Gap Switch in Exploding Bridgewire Initiator. Report 0539-0106FP, Aerojet-General Corp., December 1962.

*61. Aldrich, D. E.: Development of the F-1 Engine High-Voltage Igniter (Part No. 651990). Rep. R-7077, Rocketdyne Div., North American Rockwell Corp., June 23, 1967.

*62. Anon.: Improvement of Ignition System for Simultaneous Ignition of Retro and Ullage Motors on Saturn V. Report L/S U-819, General Precision, Inc., July 30, 1965.

63. Anon.: JANAF Second Symposium on Solid Propellant Ignition. Vol. I and II, CPIA, held at Midwest Research Institute, Oct. 2-4, 1956 (Confidential).

*Dossier for Design Criteria Monograph on Solid Rocket Motor Igniters. Unpublished, 1968. Collected source material available for inspection at NASA Lewis Research Center.

THIS DOCUMENT PROVIDED BY THE ABBOTT AEROSPACE
TECHNICAL LIBRARY
ABBOTTAEROSPACE.COM

64. Anon.: Engineering Design Handbook, Military Pyrotechnics Series. Part Three—Properties of Materials Used in Pyrotechnic Compositions. AMCP-706-187, U. S. Army Material Command, Oct. 1963.

65. Anon.: Design Principles and Practices for Controlling Hazards of Electromagnetic Radiation to Ordnance. NAVWEPS OD 30393, June 15, 1965.

66. Miller, C. L.: Fundamental Investigation of Hypergolic Ignition of Solid Propellants. Report UTC-2074-FR, Vol. I and II, United Technology Center, Apr. 15, 1966 (Confidential).

67. Connaughton, J. W.; Wilson, B. F.; and Wharton, W. W.: An Experimental Study of Hypergolic Ignition and Restart in a Unique Hybrid Window Motor. Report 66-69 presented at AIAA Third Aerospace Sciences Meeting (New York, N. Y.), Jan. 24-26, 1966.

68. Allen, Harrison, Jr.; and Pinns, M. L.: Relative Ignitability of Typical Solid Propellants with Chlorine Trifluoride. NASA TN D-1533, 1963.

69. Falkner, C. E.: Demonstration of a Multiple-Ignition Device for Use with a Restartable Solid Propellant Motor. Report UTC-2153-FR, United Technology Center, Sept. 1966 (Confidential).

70. Lawrence, W. J.: Unique Solid-Propellant Study. Report UTC-2087-FR, United Technology Center, Feb. 1, 1965 (Confidential).

71. Lawrence, W. J.: Development of a Hypersolid Ignition System. Report UTC-2137-FR, United Technology Center, Aug. 1966 (Confidential).

72. Anon.: An Investigation of Conductive Film Type Igniters for Solid Rocket Propellants, Report FPR-4-58, Redel, Inc., Mar. 15, 1958 (Confidential).

73. Anon.: An Investigation of Conductive Film Type Igniters for Solid Rocket Propellants. Report FPR-8, Redel, Inc., Mar. 1958 (Confidential).

74. Anon.: Mechanistic Studies of Conductive Film Igniters for Solid Propellant Rockets. Report JPR-4, Redel, Inc., Oct. 15, 1960 (Confidential).

*75. Barrett, D. H.: Development of the Pyromesh Ignition System. Report DDM 65-58, Rocketdyne Div., North American Rockwell Corp., Sept. 24, 1965 (Confidential).

*76. Barrett, D. H.: Adaptation of Pyromesh Ignition System to Restart Applications. Report DDM 66-20, Rocketdyne Div., North American Rockwell Corp., Sept. 1966 (Confidential).

*77. Barrett, D. H.: Ignition of Nitrate Propellants with Pyromesh. Report DDM 67-07, Rocketdyne Div., North American Rockwell Corp., Mar. 1967 (Confidential).

78. Kreidler, J. W.: Status of Research and Engineering Projects (Cast Double Base Propellants). Report ABL/QPR-15, Allegany Ballistics Lab., Hercules Powder Co., Oct. 1, 1959 (Confidential).

*Dossier for Design Criteria Monograph on Solid Rocket Motor Igniters. Unpublished, 1968. Collected source material available for inspection at NASA Lewis Research Center.

THIS DOCUMENT PROVIDED BY THE ABBOTT AEROSPACE
TECHNICAL LIBRARY
ABBOTTAEROSPACE.COM

79. Anon.: Status of Research and Engineering Projects. Report ABL/QPR-25, Allegany Ballistics Lab., Hercules Powder Co., Jan. 1, 1961 (Confidential).

80. Levine, A.: A New Method of Ignition Developed for the Davy Crockett XM28 and XM29 Weapon Systems. Report R-1543-A, Frankford Arsenal, Jan. 1961.

*81. Anon.: DuPont "Pyrocore" Igniter for Propellants. Bulletin ES-57-2C, E. I. DuPont Company, Inc., 1957.

82. Larimer, M. H.; and Zeman, S.: Development of Lightweight Inert Foam Mandrels for Ejection During Ignition of Solid Propellant Rocket Motors. Vol. I, Bulletin of ICRPG/AIAA Solid Propulsion Conference, July 1966 (Confidential).

83. Anon.: 260 Inch Diameter Motor Feasibility Demonstration Program. NASA-CR-54454, 1962.

84. Plumley, A. G.: Development of an Analytical Model to Determine Aft-End Igniter Design Parameters. Report 136-SRP, Aerojet-General Corp., Mar. 1964.

85. Anon.: 260 Inch Motor Demonstration and 156 Inch Motor Nozzle Test Program. Report SBR-19.464, Thiokol Chemical Corp., Mar. 31, 1964 (Confidential).

86. Anon.: 260 Inch Diameter Motor Program. Report AFRPL-TDR 65-24, Aerojet-General Corp., Jan. 1965.

87. Anon.: Development Program for a Dual-Thrust Pulse Motor. Final Report 750-F, Lockheed Propulsion Co., Apr. 1967 (Confidential).

88. Elzufon, E. E.: Final Report on Applied Research Program to Demonstrate the Feasibility of a Solid Propellant Pulse Motor. Final Report (Contract AF 04(611)-8531), Atlantic Research Corp., Sept. 16, 1963 (Confidential).

89. Anon.: Demonstration of a Dual-Thrust Motor for a Forward Area Air Defense System (FAADS). TR-PL-9228-01-0, Atlantic Research Corp., Oct. 1966 (Confidential).

90. Anon.: Feasibility Demonstration of a Single Chamber Controllable Solid Rocket Motor. AFRPL-TR-65-204, Aerojet-General Corp., July-Sept. 1965 (Confidential).

91. Overall, R. E.; and Sawyer, T. T.: Design, Development and Demonstration of On-Off-On Device for Solid Propellant Rocket Motors. Report 40-64, Thiokol Chemical Corp., Dec. 1964.

92. White, R. H.: Initiator Sealing and Sealants (Primers and Detonators). Report ME 600-1, Picatinny Arsenal, Oct. 1957.

93. Montesi, L. J.: An Investigation of Sealing Techniques for Electro-Explosive Devices. NOLTR 65-41, Naval Ordnance Lab., May 1965.

94. Culling, H. P.: Statistical Methods Appropriate for Evaluation of Fuze Explosive-Train Safety and Reliability. NAVORD Report 2101, Naval Ordnance Lab., Oct. 13, 1953.

*Dossier for Design Criteria Monograph on Solid Rocket Motor Igniters. Unpublished, 1968. Collected source material available for inspection at NASA Lewis Research Center.

THIS DOCUMENT PROVIDED BY THE ABBOTT AEROSPACE
TECHNICAL LIBRARY
ABBOTTAEROSPACE.COM

95. Hampton, L. D.; Ayres, J. N.; and Kabik, I.: Estimation of High and Low Probability EED Functioning Levels. EIS-A2357, paper 10 presented at Electric Initiator Symposium, Franklin Institute (Philadelphia), Oct. 1-2, 1963.

96. Anon.: Proceedings of the Congress on Hazards of Electromagnetic Radiation to Ordnance (HERO). Report FI-F-A2424, Franklin Institute, May 24-26, 1961.

97. Webb, G. E.; Stokes, B. B.; and Graves, A. E.: Development of a Standard Comparison Test Procedure for Initiators. Final Report U-65-23A, Thiokol Chemical Corp., May 1965.

98. Latta, R. M.; Stokes, B. B.; and Webb, G. E.: Standard Comparison Test for Initiator Output. Control U-65-4461, Thiokol Chemical Corp., Apr. 1965.

99. Anon.: Instantaneous Heat Transfer, Pressure, and Surface Temperature Characteristics of Solid Propellant Rocket Igniters. TMR-178, Naval Propellant Plant, Apr. 12, 1960.

100. Anon.: Reliability Prediction. Military Standard MIL-STD-756, Rev. A, May 15, 1963.

101. Bowman, N. J.; and Knippenberg, E. F.: The Design of Sterilizable Pyrotechnic Devices. Report 5EED-67, Fifth Symposium on Electroexplosive Devices, Franklin Institute, June 13-14, 1967.

102. Anon.: Nut Locking—250° F, 450° F, 800° F, 125 Ksi Ftu, 60 Ksi Ftu, and 30 Ksi Ftu. Military Specification MIL-N-25027, Rev. C, Mar. 22, 1965.

103. Anon.: Safety Wiring and Cotter Pinning, General Practices for. Military Standard MS 33540, Rev. E, Dec. 31, 1968.

104. Anon.: Sealing, Locking and Retaining Compounds Single Component. Military Specification MIL-S-22473, Rev. D, Amend. no. 1, Feb. 4, 1969.

105. Anon.: Metals, Definition of Dissimilar. Military Standard MS 33586, Rev. A, Dec. 16, 1958.

106. Von Alven, W. H.: Reliability Engineering. Prentice-Hall, Inc., 1964.

107. Leopold, H. S.: Initiation of Explosives by Exploding Wires. VIII: Survey to Determine Explosives Capable of Initiation at Moderate Voltage Levels. NOLTR 65-127, Naval Ordnance Lab., Nov. 17, 1965.

108. Anon.: Resistors, Fixed, Wire-Wound (Power Type), General Specification for. Military Specification MIL-R-26, Rev. E, July 11, 1967.

*109. Allen, R. C.: NESTS Components. Tech. Bulletin RE-246-1, McCormick Selph, 1964.

*110. Allen, R. C.: Non-Electric Stimulus Transfer Systems and Through-Bulkhead Ignition. Tech. Bulletin AE-62-3, McCormick Selph, Nov. 1966.

111. Miller, E. L.: Shock Initiation Through a Barrier, Paper 26 (EIS-A2357) presented at Electric Initiator Symposium Franklin Institute (Philadelphia), Oct. 1-2, 1963.

*Dossier for Design Criteria Monograph on Solid Rocket Motor Igniters. Unpublished, 1968. Collected source material available for inspection at NASA Lewis Research Center.

THIS DOCUMENT PROVIDED BY THE ABBOTT AEROSPACE
TECHNICAL LIBRARY
ABBOTTAEROSPACE.COM

112. Anon.: Engineering Design Handbook, Explosive Series. Properties of Explosives of Military Interest. AMCP-706-177, U. S. Army Material Command, Mar. 1967.

113. Anon.: Standard Methods and Procedures for the Determination of Heat of Explosion of Rocket Propellant Powders. NAVORD OD 9375, June 8, 1953.

114. Thomsen, R. K.; and Weber, E. F.: Stand-Off Bridgewire Safety and Arming Device. Report 231, Bermite Powder Co., Apr. 17, 1961.

115. Stresau, R.; and Degner, R.: Miniaturization of Out-of-Line Explosive Safety Systems. Report 5EED-67 presented at Fifth Symposium on Electroexplosive Devices, Franklin Institute (Philadelphia), June 13-14, 1967.

116. Nance, Paul D.: Development of a New Safe-Arm Initiator for Solid Propellant Rocket Engines. Publication I-1, presented at the Fourth JANAF Ignitability Panel Meeting, Olin Mathieson Chemical Corp. (East Alton, Ill.), Apr. 1960 (Confidential).

117. Mohrbach, P. F.; and Wood, R. F.: Preliminary Evaluation of the Light Arming Multiple Programming System. Report F-B2407, Franklin Institute Research Laboratory for Unidynamics Div., Universal Match Corp., Nov. 1965.

118. Anon.: Preclusion of Hazards from Electromagnetic Radiation to Ordnance, General Requirements for. Military Specification MIL-P-24014, Amend. no. 3, Sept. 22, 1965.

119. Anon.: Proceedings of Second HERO Congress on Hazards of Electromagnetic Radiation to Ordnance. Report FI-F-B1982, Franklin Institute, Apr. 30-May 1-2, 1963.

120. Judge, J. F.: Pyrofuze Finds Ordnance Application. Missiles and Rockets, vol. 16, no. 21, May 24, 1965, pp. 32-34.

121. Peterson, W. R.: Investigation of a Close Tolerance Pyrotechnic Metallic Delay Element. FA Report R-1693, Frankford Arsenal, Sept. 1963.

*122. Anon.: Small Column Insulated Delays for Precision Pyrotechnic Delays and Ordnance Distribution Systems. Report 67M001, McCormick Selph, June 1967.

123. Moses, S. A.: Development of a 15-Second Delay Squib. Report 5EED-67, Fifth Symposium on Electroexplosive Devices, Franklin Institute, June 13-14, 1967.

124. Nachbar, D.; et al.: Aft-End Ignition Large Solid Rocket Program. Final Report SSD-TDR-62-103, Aerojet-General Corp., Oct. 1962.

125. Lowry, E. M.: Ignition Studies. BPC Report 290, Bermite Powder Co., Dec. 31, 1962 (Confidential).

126. Von Elbe, G.: Theory of Solid Propellant Ignition and Response to Pressure Transients. Bulletin of the Interagency Solid Propulsion Meeting, Vol. III, CPIA Publication No. 18, Chemical Propulsion Information Agency, June 1963.

*Dossier for Design Criteria Monograph on Solid Rocket Motor Igniters. Unpublished, 1968. Collected source material available for inspection at NASA Lewis Research Center.

THIS DOCUMENT PROVIDED BY THE ABBOTT AEROSPACE
TECHNICAL LIBRARY
ABBOTTAEROSPACE.COM

127. Guth, E. B.; and Dubrow, B.: An Approach to the Calculation and Evaluation of Ignition Transients for Large Rocket Motors. Report 6121-6432-TC-000, Space Technology Laboratories, Inc., Mar. 13, 1963.

128. Scheier, W.: Pressure Transients for Boron-Potassium Nitrate Igniters in Inert, Vented Chambers. Report TR-32-33, Jet Propulsion Lab., California Institute of Technology, Sept. 1960.

129. Bryant, G. J.; and Lawrence, Evan K.: A Method for Predicting Ignition Energy Requirements of Practical Propellant Systems. Part III, NAVORD Report 6134, Naval Ordnance Lab., Feb. 2, 1959 (Confidential).

130. Isom, K. B.: Prediction of Ignition Transients Using the Analog Computer. CPIA Publication No. 138, vol. 1, Third Combustion Conference held at JFK Space Center, Feb. 1967.

*131. deSoto, S.; and Friedman, H. A.: Flame-Spreading and Ignition Transients in Solid Grain Propellants. Research Report 63-4, Rocketdyne, July 19, 1963.

132. Dilauro, G. F.; Linden, L. H.; Most, W. J.; and Summerfield, M.: Theoretically Predicted Ignition Transients in Solid Propellant Rocket Motors. Report 802, Princeton Univ., July 1967.

133. Peaceman, D. W.; and Rachfold, H. H., Jr.: The Numerical Solution of Parabolic and Elliptic Differential Equations. J. Soc. Ind. and Appl. Math., vol. 3, no. 1, Mar. 1955, pp. 28-41.

*134. Adams, L. J.: An Analog Computer Solution for Predicting Solid Propellant Rocket Motor Ignition Transients. DDM 65-61, Rocketdyne, Sept. 20, 1965 (Confidential).

*135. Jones, R. A.: Analog Computer Operating Procedures for Ignition Transient Problem Solution. DDTM 67-08, Rocketdyne, Mar. 22, 1967.

136. Anon.: Boron Plus Potassium Nitrate. Naval Ordnance Specification OS-9765, Rev. B, Apr. 19, 1962.

137. Anon.: Aluminum Potassium Perchlorate Igniter Pellets. Naval Ordnance Specification OS-9833, Rev. A, Amend. no. 1, June 30, 1960.

138. Anon.: Aluminum Potassium Perchlorate Powder. Naval Ordnance Specification OS-9878, June 15, 1959.

139. Anon.: Powder, Metal (for Use in Ammunition). MIL-P-4067, Rev. B, Amend. no. 1, July 22, 1967.

140. Anon.: Magnesium Powder. Military Specification JAN-M-382, Rev. A, Amend. no. 2, June 23, 1949.

141. Anon.: Plastic Molding Material—Polytetrafluoroethylene (Tfe-fluorocarbon), Federal Specification L-P-403, Rev. B, July 22, 1968.

142. Anon.: Molding Plastic, Polytetrafluoroethylene (Tfe-fluorocarbon Resin). Military Specification MIL-M-14077, Rev. A, July 9, 1965.

*Dossier for Design Criteria Monograph on Solid Rocket Motor Igniters. Unpublished, 1968. Collected source material available for inspection at NASA Lewis Research Center.

THIS DOCUMENT PROVIDED BY THE ABBOTT AEROSPACE
TECHNICAL LIBRARY
ABBOTTAEROSPACE.COM

143. Anon.: Engineering Design Handbook, Military Pyrotechnic Series. Part One: Theory and Application. AMCP-706-185, U. S. Army Material Command, Apr. 1967.

144. Anon.: Summary of Solid Propellant Ignition Studies. BPC Report 229, Bermite Powder Co., Apr. 1961 (Confidential).

145. Anon.: Test Methods for Electronic and Electrical Component Parts. Military Standard MIL-STD-202, Rev. D, Apr. 14, 1969.

146. Anon.: Preparation and Burning of Liquid Castable Propellant Strands. Ordnance Data OD 28715, July 15, 1964.

147. Anon.: ICRPG Solid Propellant Mechanical Behavior. Publication No. 21, Chemical Propulsion Information Agency, Sept. 1963.

THIS DOCUMENT PROVIDED BY THE ABBOTT AEROSPACE
TECHNICAL LIBRARY
ABBOTTAEROSPACE.COM

GLOSSARY

Symbol	Definition	Appears in
a	(1) empirically derived constant in $Nu = aRe^bPr^c$	eq. (12)
	(2) temperature coefficient of resistivity, ohm/ohm-°C	eqs. (21), (22), (24), (25)
	(3) empirical burning-rate constant in expression $r_b = aP^n$	eqs. (39), (40)
A	(1) area of bridgewire, in.^{2}	eq. (23)
	(2) cross-sectional area of bridgewire, cm^2	eq. (24)
	(3) area exposed to products of igniter combustion, cm^2	eqs. (29), (32)
$A_b(t)$	burning surface as a function of time, cm^2/sec	eqs. (39), (40)
A_f	flow area in chamber, ft^2	eq. (13b)
A_p	(1) port area, cm^2	eq. (32)
	(2) port area, in.^{2}	eqs. (33), (36a), (37)
A_t	nozzle throat area, in.^{2}	eqs. (31), (39), (40)
b	empirically determined exponent, dimensionless	eq. (12)
c	specific heat at constant pressure, cal/gm-°C	eqs. (1), (2), (14)
C	(1) original mass of charge, lb_m	eq. (26a)
	(2) empirical constant that depends on type of ignition material used	eq. (29)
C'	specific heat of bridgewire, cal/gm-°C	eq. (24)
C_D	nozzle discharge coefficient	eqs. (39), (40)
C_f	concentration of reactants in fuel	eqs. (3), (4), (5)
C_{MD}	mass discharge coefficient, lb_m/sec-in.^{2}	eq. (31)
C_o	concentration of reactants in oxidizer	eqs. (3), (4), (5), (8)
C_p	(1) concentration of products of combustion	eq. (9)
	(2) heat capacity of the system, watt-sec/°C	eq. (16)
	(3) specific heat of gas, Btu/lb_m-°F	eq. (35b)
d	diameter of bridgewire, mils	eq. (15)
D	diameter of bridgewire, in.	eq. (23)

THIS DOCUMENT PROVIDED BY THE ABBOTT AEROSPACE
TECHNICAL LIBRARY
ABBOTTAEROSPACE.COM

Symbol	Definition	Appears in
D_p	motor port diameter, ft	eqs. (12), (35)
E	(1) energy of activation, cal/mol (2) electromotive force, volts	eqs. (1)-(5) eq. (23)
E_{100}	threshold ignition energy of the propellant at 100 psig, cal/cm^2	eq. (29)
E_t	threshold firing energy (50 percent point), ergs	eq. (15)
g	gravitational constant, ft/sec^2	eq. (13b), et al.
g_c	gravitational conversion constant, in.-lb$_m$/lb$_f$-sec^2	eqs. (39), (40)
G	fraction of original mass consumed by time t, dimensionless	eq. (26)
h	(1) heat-transfer coefficient, cal/sec-cm^2-°K (2) heat-transfer coefficient, cal/sec-cm^2-°C	eqs. (10), (11), (36) eq. (24)
ΔH	heat of explosion, cal/gm	eq. (30)
I	current, amperes	eqs. (23), (24)
J	energy in joules, 0.239 cal/joule	eq. (24)
k	thermal conductivity, cal/cm-sec-°C	eq. (1), et al.
K	(1) resistivity in ohm-in. (2) empirically derived constant	eq. (23) eq. (28)
l	length of bridgewire, in.	eq. (23)
ℓ	length of bridgewire, mils	eq. (15)
L_g	length of grain, cm	eq. (32)
$\dot{m}_i$	igniter mass flow rate, lb$_m$/sec	eqs. (13b), (31), (36), (37)
$\dot{m}_o$	mass flow rate of oxidizer for hypergolic igniters, lb$_m$/sec	sec. 3.2.4.2
M	weighted mean molecular weight of gaseous products, lb/mol	eq. (26b)

THIS DOCUMENT PROVIDED BY THE ABBOTT AEROSPACE
TECHNICAL LIBRARY
ABBOTTAEROSPACE.COM

Symbol	Definition	Appears in
$\dot{M}_c$	chamber filling, lb_m/sec	eq. (38)
$\dot{M}_{ig}$	igniter gas input, lb_m/sec	eq. (38)
$\dot{M}_n$	nozzle discharge, lb_m/sec	eq. (38)
$\dot{M}_p$	propellant gas evolved, lb_m/sec	eq. (38)
n	empirical burning-rate pressure exponent in relationship $r_p = aP^n$	eqs. (39), (40)
Nu	Nusselt number	defined in eq. (12), used in eq. (35b)
Nu_∞	Nusselt number for established turbulent flow in a pipe (dimensionless)	eq. (35b)
P	(1) perimeter of flow area, ft (2) perimeter, cm (3) pressure, $lb_f/in.^2$	eq. (13b) eq. (24) eqs. (26), (27), (39), (40)
P_A	atmospheric pressure, $lb_f/in.^2$	eqs. (26), (27)
pF	picofarad, 10^{-12} farad	sec. 3.1.5.2.2
Pr	Prandtl number	eq. (12)
$P(t)$	power input function, watts	eqs. (16), (18), (20)
$\dot{q}$	(1) energy flux per unit area, cal/cm^2-sec (2) energy flux per unit area, Btu/ft^2-sec	eqs. (2), (10), (11), (14) eqs. (35), (36), (37)
q_c	propellant ignitability, cal/cm^2	eqs. (32), (33)
Q	(1) heat of reaction per unit mass, cal/gm (2) total energy required for ignition, cal	eqs. (1), (2), (5) eqs. (29), (30), (32)
Q_{ign}	available energy in ignition material, Btu/lb_m	eq. (37)
r	(1) linear regression rate of solid propellant surface, cm/sec (2) radial coordinate, cm (used to define θ_s)	eq. (2) eq. (24)
r_s	radius of bridgewire, cm (used to define θ_s)	eq. (24)

THIS DOCUMENT PROVIDED BY THE ABBOTT AEROSPACE
TECHNICAL LIBRARY
ABBOTTAEROSPACE.COM

Symbol	Definition	Appears in
R	(1) universal gas constant, cal/°K-mol (2) universal gas constant, in.-lb_f/°R-mol (3) bridgewire resistance, ohms	eqs. (1)-(5) eq. (26b) eqs. (21), (22)
Re	Reynolds number	eq. (12)
t	time, sec	eq. (1), et al.
t_i	time required to reach ignition, sec	eq. (34)
T	(1) temperature, °K (2) flame temperature, °R	eqs. (1)-(7) eqs. (26b), (39), (40)
T_g	(1) gas temperature, °K (2) gas temperature, °R	eqs. (10), (11) eqs. (35b), (36)
T_i	(1) ignition temperature, °K (2) ignition temperature, °F	text following eq. (14) eq. (34b)
T_o	(1) isochoric flame temperature, °K (2) initial temperature, °K (3) initial temperature, °F	eq. (13a) eq. (14) eq. (34b)
T_s	(1) temperature at the propellant surface, °K (2) temperature at the propellant surface, °R	eqs. (10), (11), (14) eqs. (35b), (36)
V	free volume, $in.^3$	eqs. (26a), (28), (39), (40)
W	(1) power, watts (2) ignition material, gms	eq. (23) eq. (30)
W_i	weight of Alclo igniter pellet, gms	eq. (28)
x	(1) distance from gas-solid interface, cm (2) distance from nozzle exit, ft (3) axial coordinate, cm (used to define θ_s) (4) distance downstream from igniter impingement point, ft	eqs. (1)-(5), (6)-(9) eq. (13) eq. (24) eq. (36a)
Z	pre-exponential factor, sec^{-1}	eqs. (1)-(5)
α	$k/\rho c$ — thermal diffusivity, cm^2/sec	eqs. (5)-(7), (24), (25)
β	extinction coefficient for radiant transmission, cm^{-1}	eq. (2)

THIS DOCUMENT PROVIDED BY THE ABBOTT AEROSPACE
TECHNICAL LIBRARY
ABBOTTAEROSPACE.COM

Symbol	Definition	Appears in
γ	(1) ratio of specific heats (2) heat loss factor (power/temperature change in degrees), watts/°C	eqs. (13), (39), (40) eqs. (16), (17), (20), (22)
δ	density of charge material, lb/in.^{3}	eqs. (26), (27)
Δ	(1) change in value of any parameter (2) loading density (C/V), lb/in.^{3}	eq. (26), et al. eqs. (26), (27)
ε	hot particle emissivity, dimensionless	eq. (10)
θ	(1) T_g/T_o (2) temperature rise above ambient, °C (3) temperature, °C	eq. (13) eq. (16), (19), (20) eqs. (24), (25)
K	mass diffusivity, cm^2/sec	eqs. (3), (4), (8), (9)
λ	(1) $0.037\left(\frac{\mu g}{\dot{m}_i}\right)^{0.2}\left(\frac{P}{A_f^{0.8}}\right)$ (2) RT/M—effective force (energy), in.-lb$_f$/lb$_m$	eq. (13b) eqs. (26), (27)
μ	(1) gas viscosity, lb$_f$-sec/ft^2 (2) gas viscosity, lb$_m$/ft-sec	eq. (13b) eqs. (35b), (36a)
μF	microfarad, 10^{-6} farad	sec. 3.1.2.1.1
ρ	density, gm/cm^3	eq. (1), et al.
σ	(1) Stefan-Boltzman constant, cal/cm^2-sec-(°K)^4 (2) electrical conductivity, mhos/cm	eq. (10) eq. (24)
τ	thermal time constant $\left(\frac{C_p}{\gamma}\right)$, sec	eqs. (17), (19)
∇^2	Laplace operator $= \frac{\partial^2}{\partial x^2} + \frac{\partial^2}{\partial y^2} + \frac{\partial^2}{\partial z^2}$	eqs. (24), (25)

Subscripts

c	condensed phase
f	fuel
g	gas phase
o	oxidizer
p	products of combustion

THIS DOCUMENT PROVIDED BY THE ABBOTT AEROSPACE
TECHNICAL LIBRARY
ABBOTTAEROSPACE.COM

NASA SPACE VEHICLE DESIGN CRITERIA
MONOGRAPHS ISSUED TO DATE

ENVIRONMENT

SP-8005	Solar Electromagnetic Radiation, June 1965
SP-8010	Models of Mars Atmosphere (1967), May 1968
SP-8011	Models of Venus Atmosphere (1968), December 1968
SP-8013	Meteoroid Environment Model—1969 (Near Earth to Lunar Surface), March 1969
SP-8017	Magnetic Fields—Earth and Extraterrestrial, March 1969
SP-8020	Mars Surface Models (1968), May 1969
SP-8021	Models of Earth's Atmosphere (120 to 1000 km), May 1969
SP-8023	Lunar Surface Models, May 1969
SP-8037	Assessment and Control of Spacecraft Magnetic Fields, September 1970

STRUCTURES

SP-8001	Buffeting During Atmospheric Ascent, revised November 1970
SP-8002	Flight-Loads Measurements During Launch and Exit, December 1964
SP-8003	Flutter, Buzz, and Divergence, July 1964
SP-8004	Panel Flutter, May 1965
SP-8006	Local Steady Aerodynamic Loads During Launch and Exit, May 1965
SP-8007	Buckling of Thin-Walled Circular Cylinders, revised August 1968
SP-8008	Prelaunch Ground Wind Loads, November 1965

THIS DOCUMENT PROVIDED BY THE ABBOTT AEROSPACE
TECHNICAL LIBRARY
ABBOTTAEROSPACE.COM

SP-8009	Propellant Slosh Loads, August 1968
SP-8012	Natural Vibration Modal Analysis, September 1968
SP-8014	Entry Thermal Protection, August 1968
SP-8019	Buckling of Thin-Walled Truncated Cones, September 1968
SP-8029	Aerodynamic and Rocket-Exhaust Heating During Launch and Ascent, May 1969
SP-8031	Slosh Suppression, May 1969
SP-8032	Buckling of Thin-Walled Doubly Curved Shells, August 1969
SP-8035	Wind Loads During Ascent, June 1970
SP-8040	Fracture Control of Metallic Pressure Vessels, May 1970
SP-8046	Landing Impact Attenuation For Non-Surface-Planing Landers, April 1970

GUIDANCE AND CONTROL

SP-8015	Guidance and Navigation for Entry Vehicles, November 1968
SP-8016	Effects of Structural Flexibility on Spacecraft Control Systems, April 1969
SP-8018	Spacecraft Magnetic Torques, March 1969
SP-8024	Spacecraft Gravitational Torques, May 1969
SP-8026	Spacecraft Star Trackers, July 1970
SP-8027	Spacecraft Radiation Torques, October 1969
SP-8028	Entry Vehicle Control, November 1969
SP-8033	Spacecraft Earth Horizon Sensors, December 1969
SP-8034	Spacecraft Mass Expulsion Torques, December 1969

THIS DOCUMENT PROVIDED BY THE ABBOTT AEROSPACE
TECHNICAL LIBRARY
ABBOTTAEROSPACE.COM

SP-8036	Effects of Structural Flexibility on Launch Vehicle Control Systems, February 1970
SP-8047	Spacecraft Sun Sensors, June 1970

CHEMICAL PROPULSION

SP-8025	Solid Rocket Motor Metal Cases, April 1970
SP-8041	Captive-Fired Testing of Solid Rocket Motors, March 1971
SP-8048	Liquid Rocket Engine Turbopump Bearings, March 1971