NATIONAL ADVISORY COMMITTEE
FOR AERONAUTICS
MAILED
AUG 26 1930
TO: Library L. M. A. L.

THIS DOCUMENT PROVIDED BY THE ABBOTT AEROSPACE
TECHNICAL LIBRARY
ABBOTTAEROSPACE.COM

SEP 4 - 1930

TECHNICAL NOTES

NATIONAL ADVISORY COMMITTEE FOR AERONAUTICS

No. 347

THE PRESSURE DISTRIBUTION OVER A DOUGLAS WING TIP ON A BIPLANE IN FLIGHT

By Richard V. Rhode and Eugene E. Lundquist

FILE COPY
To be returned to
the files of the Langley
Memorial Aeronautical
Laboratory

Washington
August, 1930

THIS DOCUMENT PROVIDED BY THE ABBOTT AEROSPACE
TECHNICAL LIBRARY
NASA Technical Library
3 1176 01431 9421

NATIONAL ADVISORY COMMITTEE FOR AERONAUTICS.

TECHNICAL NOTE NO. 347.

THE PRESSURE DISTRIBUTION OVER A DOUGLAS WING TIP ON A BIPLANE IN FLIGHT.

By Richard V. Rhode and Eugene E. Lundquist.

Summary

This note presents the results obtained in pressure distribution tests on the right upper wing panel and tip of a Douglas M-3 airplane in flight. These tests are a part of a more extensive investigation of the effect of changes in tip shape on the load distribution, the tip reported herein being the first of a series of six shapes being tested.

The results are given in tables and curves in such form that the load distribution for any conditions may be determined easily.

Tests were made at Langley Field by the National Advisory Committee for Aeronautics in the spring of 1930.

Introduction

The distribution of load over the tips of airplane wings, and the influence of such loads on the stresses in the spars is perhaps of as great importance in the wing design as any other phase of load distribution. Very little correlated or systematic data on the distribution of load over wing tips, however, ex-

THIS DOCUMENT PROVIDED BY THE ABBOTT AEROSPACE
TECHNICAL LIBRARY
ABBOTTAEROSPACE.COM

ist, and the common practice in wing design is to assume a "tip loss" or reduction in load at the tip which is based on early wind-tunnel tests. These tests were made on an airfoil with square tips, and were conducted in such a manner that the results are somewhat open to question. Later tests have been made on wings with other forms of tip, but the results of these tests either are incomplete or have not been correlated to the point of usefulness in design.

In view, therefore, of the importance of wing tip loads, and of the lack of systematic or reliable information concerning such loads, an investigation in flight of the pressure distribution over wing tips has been undertaken by the National Advisory Committee for Aeronautics at Langley Field, Virginia. This investigation is outlined to include pressure measurements on the right upper wing panel of a Douglas M-3 airplane with several variations in tip plan form, systematic in the main, but also including a few odd shapes, either because such forms are commonly used, or because of the facility with which such forms could be included in the program.

The M-3 airplane was chosen on which to make the tests, largely because it was the only one available at the Laboratory for these tests. The choice, however, was particularly fortunate because of the common form of wing cellule on this airplane which employs the Clark Y airfoil, a gap-chord ratio very close to unity, no stagger, no decalage, and no overhang. The results

THIS DOCUMENT PROVIDED BY THE ABBOTT AEROSPACE
TECHNICAL LIBRARY
ABBOTTAEROSPACE.COM

therefore, have a wide applicability.

The present note includes the results on the first tip tested, which is called, for convenience, the "Douglas Tip," since it is the tip designed for the M-3 airplane. The results for the other tips will be presented in note form as the information is obtained, and the results for all tips, finally, will be included and analyzed in a complete report on this investigation.

Method and Apparatus

The M-3 airplane used in these tests is a normal biplane with, however, an aspect ratio somewhat higher than usual. The characteristics of this airplane are given in Table I. The shape of the wing tip plan form is given in Figure 1 and Table II, and the rib profiles in Figure 2 and Table III. The wings were normally rigged to obtain good flying qualities, a weight being placed in the lower left wing panel to balance the weight of the pressure tubes installed in the right upper panel. A slight washout in the right-hand cellule existed, however, which is recorded in Figure 3. It will be noticed that at the tip an "aerodynamic" twist is shown. This twist arises from the change in rib profile at the tip sections resulting in a variation of the angle of zero lift along the span near the tip. It was computed according to the method given by Munk in National Advisory Committee for Aeronautics Technical Note No. 122.

In addition to the rigged twist, a slight amount of nega-

THIS DOCUMENT PROVIDED BY THE ABBOTT AEROSPACE
TECHNICAL LIBRARY
ABBOTTAEROSPACE.COM

tive torsional deflection, or washout, existed as a result of the aerodynamic loads in flight. The amount of this deflection at the interplane struts was measured in steady glides by means of a surveyor's level sighted on a boom attached to these struts, the applied load factor being equal to the cosine of the flight path angle or, therefore, very close to ~~one~~ 1, since the flight path angle was never large. The amount of this deflection is shown in Figure 4. During the pressure measurements, however, the maneuvers were made with such consideration to air speed and applied load factors, that the deflection was never more than 0.2°, and usually less than 0.1°. The influence of this torsional deflection on the results presented is, therefore, very slight.

The apparatus used in these tests consisted of an N.A.C.A. recording multiple manometer to which pressure orifices in the wing (Table IV and Fig. 1) were connected by means of aluminum tubes, an air-speed recorder with a swivelling Pitot head mounted on a boom about 0.9 chord length forward of the lower wing at the strut, an accelerometer mounted at the C.G., and a control-position recorder. These instruments are all photographically recording, electrically operated on the same circuit, and synchronized by means of a timer which causes grid lines to be imposed on all records simultaneously.

The effects of temperature on the recording instruments usually are so great that appreciable errors exist in the measure-

THIS DOCUMENT PROVIDED BY THE ABBOTT AEROSPACE
TECHNICAL LIBRARY
ABBOTTAEROSPACE.COM

ments, unless the temperature is controlled. The size of the M-3 airplane, however, made possible the installation of these instruments in an insulated compartment which was kept at a constant temperature by means of an electrical heater controlled by a thermostat, and deriving energy from a generator driven by the engine. Prior to each flight, the heater was connected to an external source of electrical energy for about ~~an~~ 1½ hour ~~and a half~~ in order to allow the instruments to reach equilibrium at a constant temperature. By this means the accuracy of the measurements was considerably increased.

Calibrations of the manometer were made frequently during the course of the tests to insure further accuracy. The airspeed installation was calibrated over a measured course, and it was found that with the Pitot head mounted on a boom forward of the wing about 0.9 chord length, the interference of the wings was practically eliminated at all angles of attack, the maximum effect being to reduce the measured air speed about 3.3 per cent at angles near maximum lift.

A considerable proportion of the runs made were in steady horizontal flight, although a number of pull-ups were made to insure attaining maximum lift as well as to detect any effect caused by pitching. The airplane was also pushed into vertical dives for short runs to obtain measurements in conditions near zero lift, care being taken to avoid high speeds.

THIS DOCUMENT PROVIDED BY THE ABBOTT AEROSPACE
TECHNICAL LIBRARY
ABBOTTAEROSPACE.COM

Precision

The precision of these tests is believed to be much better than that of any previous pressure distribution tests made in flight. The temperature of the instruments was maintained constant within ±0.5° ~~degree Fahrenheit,~~ which entirely eliminated any temperature effects on the instruments. Frequent calibrations showed variations within about 2 per cent, but the calibration taken nearest any set of test runs was used in working up the data, so that errors caused by aging of the instruments were probably less than the 2 per cent indicated. The air-speed calibration was used for all level flight runs, and errors in this measurement were reduced to within 1 per cent in these cases, although at the higher angles of attack in the pull-ups, where the calibration could not be used directly, errors in air speed may be as high as 2 per cent. The determination of maximum C_N may, therefore, be in error by as much as 4 per cent, although no error is introduced in the relations between the coefficients given in the final results. A good idea of the accuracy of the final results can be obtained by noting the small dispersion of points in Figures 6 and 7, which are included for this purpose.

THIS DOCUMENT PROVIDED BY THE ABBOTT AEROSPACE
TECHNICAL LIBRARY
ABBOTTAEROSPACE.COM

Results

The results are given in Figures 5 to 9, inclusive, and in Tables V, VI, and VII. Figure 5 shows representative pressure plots throughout the range of C_N investigated, the pressures for these cases being tabulated in Table V. The final and useful results are given in Figures 8 and 9, which show the variation of rib C_N with wing C_N, and the variation of rib C_M with rib C_N, respectively. These curves were all established by a large number of points, as in Figures 6 and 7, the points being omitted to avoid confusion. The curves for the root section were obtained by extrapolating span-C_N curves and span-C_M curves from a large amount of data, the extrapolated values falling on the curves of Figures 8 and 9 with only slightly less consistency than the measured points on the experimental curves. They are believed to be quite reliable although, in view of the extrapolation, they are to be considered as representative of the virgin wing unaffected by fuselage interference or slipstream effects.

Tables VI and VII give coordinates of the curves of Figures 8 and 9, so that these curves may be reconstructed on a larger and more accurate scale than is practicable to print. To use these curves, for any wing C_N (or practically speaking, for any wing lift coefficient), the span-C_N distribution may be obtained from Figure 8 by plotting the corresponding values of rib

THIS DOCUMENT PROVIDED BY THE ABBOTT AEROSPACE
TECHNICAL LIBRARY
ABBOTTAEROSPACE.COM

C_N at their proper locations on the span base line as determined from Figure 1. The values of rib C_M corresponding to these values of rib C_N may be determined from Figure 9, and the center of pressure locus can then be drawn from the relation $C_P = \frac{C_M}{C_N}$. To obtain the span-load distribution, the ordinates of the span-C_N curve must be reduced at the tip in the same ratio as the reduction in chord length.

Langley Memorial Aeronautical Laboratory,
National Advisory Committee for Aeronautics,
Langley Field, Va., July 28, 1930.

THIS DOCUMENT PROVIDED BY THE ABBOTT AEROSPACE
TECHNICAL LIBRARY
ABBOTTAEROSPACE.COM

TABLE I.

Characteristics of Douglas M-3 Airplane

Type	Biplane
Airfoil	Clark Y
Span (upper and lower)	45 ft. 10 in.
Chord (upper and lower)	5 " 8 "
Gap	6 " 0 "
Stagger	None
C.G. in per cent of chord	29
Areas:	
Half upper wing including aileron	126.4 sq.ft.
Half lower wing including aileron	126.4 "
Total wing area	505.6 "
Horizontal tail surfaces	58.0 "
Vertical tail surfaces	17.7 "
Weight during tests	4840 lb.
Engine	Liberty
Rated horsepower at 1750 r.p.m.	420
Power loading	11.52 lb. per hp
Wing loading	9.57 lb. per sq.ft.

THIS DOCUMENT PROVIDED BY THE ABBOTT AEROSPACE
TECHNICAL LIBRARY
ABBOTTAEROSPACE.COM

TABEL II. Coordinates of Wing Tip Plan Form (feet)

Section from extreme tip		.00	0.20	0.40	0.60	0.80	1.00	1.20	1.50
Distance from line "X-X" to	L.E. tip curve	2.04	.95	.66	.44	.28	.16	.08	.01
	T.E. tip curve	2.04	3.12	3.60	3.95	4.22	4.48	4.69	4.94

TABLE II (cont.)

Section from extreme tip		1.80	2.10	2.40	2.70	3.00	3.30	3.60	3.90
Distance from line "X-X" to	L.E. tip curve	.00	.00	.00	.00	.00	.00	.00	.00
	T.E. tip curve	5.15	5.32	5.45	5.55	5.62	5.66	5.67	5.67

THIS DOCUMENT PROVIDED BY THE ABBOTT AEROSPACE
TECHNICAL LIBRARY
ABBOTTAEROSPACE.COM

TABLE III. Ordinates of Pressure Ribs

Station in % chord	Clark Y		Rib A		Rib B		Rib C		Rib D		Rib E		Rib F	
	Upper	Lower	Upper	Lower	Upper	Lower	Upper	Lower	Upper	Lower	Upper	Lower	Upper	Lower
.00	3.50	3.50	3.49	3.49	3.36	3.36	3.49	3.49	3.56	3.56	4.37	4.37	4.52	4,52
1.25	5.45	1.93	5.56	1.93	5.34	1.79	5.42	1.84	5.53	2.02	6.14	2.40	6.80	3.14
2.50	6.50	1.466	6.52	1.47	6.38	1.33	6.43	1.38	6.56	1.50	6.76	1.93	7.51	2.52
5.00	7.90	.933	8.00	.97	7.90	.83	8.00	.87	8.11	.94	8.02	1.30	8.19	2.14
7.50	8.85	.629	9.05	.65	8.91	.28	8.96	.46	9.14	.56	8.80	.94	8.50	2.07
10.00	9.60	.42	9.74	.46	9.65	.32	9.65	.32	9.84	.38	9.58	.63	8.88	1.92
15.00	10.685	.15	10.76	.28	10.67	.14	10.62	.18	10.74	.23	10.42	.31	9.65	1.46
20.00	11.36	.033	11.26	.09	11.26	.05	11.26	.05	11.15	.09	11.05	.10	9.80	1.15
30.00	11.70	.00	11.73	.00	11.81	.00	11.81	.00	11.62	.00	11.31	.00	10.19	.54
40.00	11.40	.00	11.36	.00	11.40	.05	11.45	.00	11.30	.00	11.15	.00	10.03	.15
50.00	10.515	.00	10.48	.00	10.58	.03	10.58	.05	10.40	.05	10.48	.05	9.57	.00
60.00	9.148	.00	9.19	-.05	9.42	.09	9.25	.14	9.09	.05	9.32	.05	8.73	.00
65.00	8.30	.00	8.27	.00	8.54	.09	8.45	.14	8.38	.09	8.75	.10	8.19	.08
70.00	7.35	.00	7.36	.00	7.68	.09	7.67	.14	7.45	.09	7.92	.10	7.76	.15
80.00	5.216	.00	5.33	.00	5.65	.18	5.70	.23	5.25	.23	5.89	.21	6.50	.23
90.00	2.802	.00	2.00	-.05	3.31	.23	3.31	.18	3.04	.23	3.85	.42	4.82	.23
95.00	1.494	.00	1.52	-.09	2.02	.14	2.02	.09	1.87	.09	2.71	.62	3.90	.38
100.00	.12	.00	.23	-.23	.74	.00	.65	.00	.75	.00	1.67	.52	2.99	.69

Note.- All ordinates given are in per cent of chord.

THIS DOCUMENT PROVIDED BY THE ABBOTT AEROSPACE
TECHNICAL LIBRARY
ABBOTTAEROSPACE.COM

TABLE IV

Orifice Locations in per cent Chord

Orifice	Rib					
	A	B	C	D	E	F
1	1.54	1.47	1.47	1.50	2.58	6.13
2	3.06	2.94	3.02	3.08	4.33	9.80
3	4.45	4.41	4.49	4.58	7.25	17.16
4	6.69	6.70	6.69	6.75	12.66	24.50
5	13.31	13.30	13.30	13.59	17.67	44.10
6	25.00	25.00	25.00	25.50	23.33	63.65
7	41.30	41.40	41.30	42.10	40.00	78.40
8	59.50	59.10	58.80	60.10	56.75	83.10
9	73.70	72.00	72.30	73.50	73.33	-
10	94.40	94.50	94.40	92.30	93.58	-

THIS DOCUMENT PROVIDED BY THE ABBOTT AEROSPACE
TECHNICAL LIBRARY
ABBOTTAEROSPACE.COM

TABLE V

Recorded Pressures in Multiples of q

Run No. 66 Wing $C_N = -0.080$

Orifice	Rib					
	A	B	C	D	E	F
1	-2.58	-2.22	-2.39	-2.72	-1.48	- .76
2	-1.96	-1.96	-1.82	-1.72	-1.20	- .38
3	-1.52	-1.38	-1.41	-1.23	- .91	- .15
4	-1.01	-1.00	-1.05	- .84	- .43	- .16
5	- .44	- .57	- .38	- .33	- .29	.06
6	.03	.02	- .05	0	- .11	.0
7	.26	.21	.16	.22	.08	.10
8	.14	.25	.19	.13	.12	.13
9	.14	.12	.14	.15	.09	-
10	.07	.04	.02	.03	.12	-

Run No. 66 Wing $C_N = -.013$

Orifice	Rib					
	A	B	C	D	E	F
1	-2.19	-2.00	-2.02	-2.01	-1.21	- .61
2	-1.68	-1.66	-1.49	-1.47	- .93	- .22
3	-1.25	-1.08	-1.15	- .98	- .68	- .12
4	- .79	- .79	- .82	- .63	- .28	- .11
5	- .31	- .40	- .24	- .21	- .20	.06
6	.10	.11	.04	.05	.03	.0
7	.30	.24	.20	.25	.10	.06
8	.16	.26	.20	.15	.13	.07
9	.16	.13	.20	.15	.09	-
10	.07	.04	.02	.03	.12	-

THIS DOCUMENT PROVIDED BY THE ABBOTT AEROSPACE
TECHNICAL LIBRARY
ABBOTTAEROSPACE.COM

TABLE V (cont.)

Recorded Pressures in Multiples of q

Run No. 66 Wing C_N = 0.095

Orifice	Rib					
	A	B	C	D	E	F
1	-1.59	-1.63	-1.53	-1.56	-0.86	-0.36
2	-1.22	-1.26	-1.11	-1.09	- .65	- .10
3	- .78	- .71	- .76	- .57	- .46	0
4	- .38	- .42	- .44	- .30	- .16	- .04
5	- .04	- .15	- .07	- .04	- .10	.10
6	.25	.25	.16	.16	.07	0
7	.42	.31	.25	.30	.15	.06
8	.22	.28	.23	.17	.16	.07
9	.18	.13	.20	.15	.09	-
10	.07	.04	.02	.03	.11	-

Run No. 66 Wing C_N = 0.257

Orifice	Rib					
	A	B	C	D	E	F
1	- .82	- .97	- .94	-1.08	- .41	- .08
2	- .50	- .67	- .60	- .55	- .29	.07
3	- .27	- .23	- .30	- .18	- .15	.14
4	.04	- .08	- .13	- .02	.03	.06
5	.30	.10	.23	.15	.12	.13
6	.48	.42	.34	.31	.22	.01
7	.56	.42	.37	.38	.25	.07
8	.31	.35	.28	.20	.20	.09
9	.23	.16	.20	.18	.11	-
10	.08	.06	.03	.04	.11	-

THIS DOCUMENT PROVIDED BY THE ABBOTT AEROSPACE
TECHNICAL LIBRARY
ABBOTTAEROSPACE.COM

TABLE V (cont.)

Recorded Pressures in Multiples of q

Run No. 14 Wing C_N = 0.337

Orifice	Rib					
	A	B	C	D	E	F
1	-0.17	-0.45	-0.47	-0.67	-0.12	0.09
2	0	-.21	-.18	-.17	-.04	.14
3	.13	.14	.08	.16	.05	.27
4	.48	.26	.15	.24	.17	.13
5	.54	.34	.45	.31	.23	.15
6	.57	.56	.44	.37	.30	.08
7	.62	.50	.40	.44	.30	.07
8	.36	.35	.30	.20	.21	.05
9	.26	.18	.21	.18	.12	-
10	.09	.04	.02	.05	.10	-

Run No. 66 Wing C_N = .523

Orifice	Rib					
	A	B	C	D	E	F
1	0.67	0.20	0.17	0	0.41	0.49
2	.78	.46	.42	.41	.40	.38
3	.95	.71	.60	.74	.38	.40
4	1.03	.79	.63	.70	.45	.25
5	.96	.61	.74	.55	.43	.24
6	.82	.76	.63	.53	.47	.02
7	.78	.61	.52	.52	.39	.10
8	.44	.44	.38	.27	.27	.14
9	.30	.19	.25	.22	.15	-
10	.09	.06	.03	.06	.16	-

THIS DOCUMENT PROVIDED BY THE ABBOTT AEROSPACE
TECHNICAL LIBRARY
ABBOTTAEROSPACE.COM

TABLE V (cont.)

Recorded Pressures in Multiples of q

Run No. 18 Wing C_N = .702

Orifice	Rib					
	A	B	C	D	E	F
1	1.63	1.19	1.06	.72	.98	.80
2	1.57	1.20	1.19	1.02	.95	.68
3	1.56	1.40	1.34	1.33	.74	.64
4	1.70	1.37	1.24	1.20	.72	.44
5	1.41	1.10	1.13	.88	.70	.35
6	1.09	1.03	.85	.74	.60	.04
7	.91	.74	.64	.61	.45	.16
8	.50	.49	.46	.30	.30	.20
9	.37	.25	.26	.25	.19	-
10	.11	.11	.02	.08	.15	-

Run No. 73 Wing C_N = .966

Orifice	Rib					
	A	B	C	D	E	F
1	3.12	2.23	1.99	1.73	1.80	1.44
2	2.86	2.35	2.11	1.87	1.68	1.00
3	2.74	2.27	1.78	2.12	1.30	.96
4	2.49	2.00	1.98	1.87	1.14	.63
5	2.02	1.65	1.53	1.26	.99	.50
6	1.44	1.26	1.14	.96	.90	.29
7	1.12	.92	.79	.76	.67	.34
8	.60	.56	.53	.39	.45	.38
9	.39	.28	.36	.33	.33	-
10	.12	.08	.05	.12	.22	-

THIS DOCUMENT PROVIDED BY THE ABBOTT AEROSPACE
TECHNICAL LIBRARY
ABBOTTAEROSPACE.COM

TABLE V (cont.)

Recorded Pressures in Multiples of q

Run No. 73 Wing C_N = 1.225

Orifice	Rib					
	A	B	C	D	E	F
1	4.72	3.46	2.96	2.63	2.58	1.94
2	4.20	3.34	3.12	2.77	2.38	1.42
3	4.00	3.36	2.90	2.95	1.91	1.21
4	3.45	2.90	2.62	2.53	1.58	.88
5	2.62	2.27	2.07	1.72	1.36	.68
6	1.78	1.58	1.46	1.22	1.20	.44
7	1.32	1.12	.96	.91	.86	.64
8	.72	.62	.61	.48	.62	.77
9	.46	.32	.40	.40	.46	-
10	.13	.10	.64	.16	.30	-

Run No. 73 Wing C_N = 1.418

Orifice	Rib					
	A	B	C	D	E	F
1	5.21	4.33	3.96	3.36	3.27	2.52
2	4.74	4.30	4.04	3.59	2.97	1.89
3	4.47	4.11	3.75	3.69	2.39	1.52
4	3.96	3.71	3.30	3.15	1.95	1.13
5	3.19	2.76	2.49	2.07	1.63	.86
6	2.13	1.87	1.72	1.44	1.42	.62
7	1.49	1.25	1.09	1.04	1.05	.99
8	.76	.67	.68	.56	.74	1.21
9	.47	.38	.43	.46	.58	-
10	.17	.14	.08	.19	.37	-

THIS DOCUMENT PROVIDED BY THE ABBOTT AEROSPACE
TECHNICAL LIBRARY
ABBOTTAEROSPACE.COM

TABLE VI

Coordinates of Curves of Figure 8

Wing C_N	Rib C_N						
	Root	A	B	C	D	E	F
-.1	-.110	-.100	-.090	-.095	-.095	-.091	-.065
-.05	-.050	-.046	-.048	-.055	-.060	-.060	-.050
.0	+.010	+.008	-.002	-.017	-.025	-.031	-.030
.1	.125	.111	+.082	+.070	.050	+.030	+.010
.2	.240	.219	.171	.152	.124	.093	.050
.3	.352	.325	.260	.234	.200	.158	.090
.4	.468	.431	.350	.319	.276	.222	.135
.5	.580	.538	.435	.400	.351	.286	.180
.6	.690	.642	.530	.482	.427	.353	.232
.7	.802	.745	.615	.569	.503	.421	.288
.8	.912	.850	.702	.650	.582	.490	.350
.9	1.034	.955	.792	.735	.661	.561	.426
1.0	1.130	1.055	.880	.820	.741	.641	.520
1.1	1.236	1.160	.970	.902	.822	.728	.623
1.2	1.340	1.260	1.060	.985	.905	.820	.735
1.3	1.440	1.362	1.146	1.070	.989	.912	.860
1.4	1.550	1.465	1.235	1.151	1.072	1.010	.990
1.47	1.620	1.533	1.302	1.210	1.132	1.073	1.090

THIS DOCUMENT PROVIDED BY THE ABBOTT AEROSPACE
TECHNICAL LIBRARY
ABBOTTAEROSPACE.COM

TABLE VII

Coordinates of Curves of Figure 9

Rib C_N	Rib C_M						
	Root	A	B	C	D	E	F
-.1	-.047	-.048	-.043	-.043	-.034	-.034	-.008
-.05	-.059	-.059	-.054	-.053	-.043	-.040	-.012
.0	-.071	-.069	-.065	-.063	-.052	-.048	-.020
.1	-.094	-.091	-.085	-.083	-.075	-.066	-.040
.2	-.118	-.114	-.106	-.105	-.095	-.089	-.067
.3	-.142	-.137	-.127	-.125	-.118	-.115	-.099
.4	-.165	-.158	-.149	-.145	-.140	-.140	-.135
.5	-.188	-.180	-.170	-.165	-.164	-.169	-.175
.6	-.212	-.201	-.190	-.186	-.188	-.198	-.217
.7	-.236	-.224	-.210	-.208	-.211	-.228	-.261
.8	-.259	-.245	-.230	-.227	-.235	-.258	-.307
.9	-.283	-.268	-.250	-.248	-.259	-.290	-.355
1.0	-.306	-.290	-.272	-.268	-.284	-.324	-.405
1.1	-.329	-.311	-.293	-.289	-.308	-.355	-.455
1.2	-.353	-.332	-.314	-.310			
1.3	-.376	-.355	-.334				
1.4	-.400	-.376					
1.5	-.424	-.400					
1.6	-.447						

THIS DOCUMENT PROVIDED BY THE ABBOTT AEROSPACE
TECHNICAL LIBRARY
ABBOTTAEROSPACE.COM

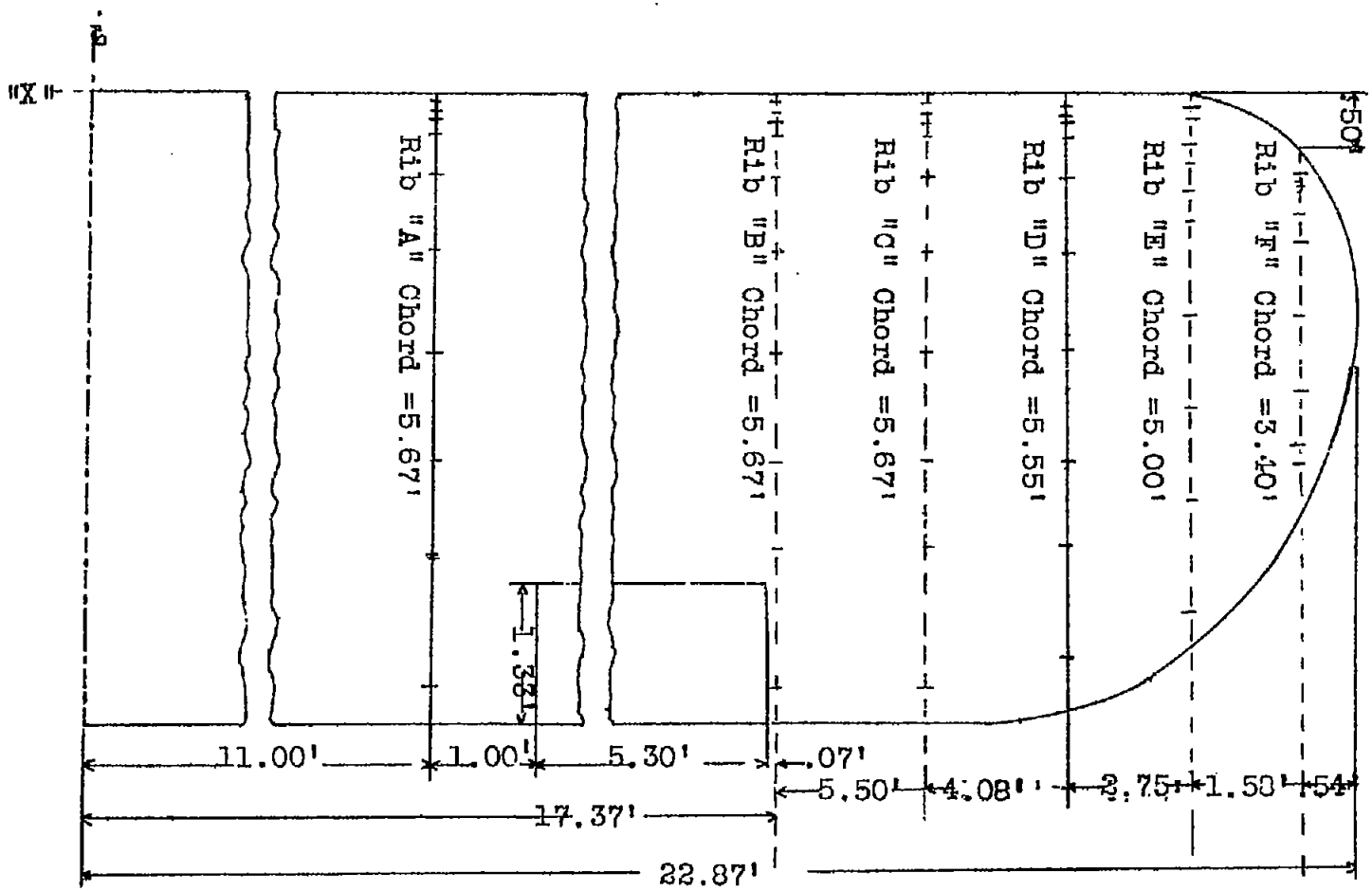

Fig.1

Fig.1 M3 wing with pressure ribs & orifice locations (Douglas Tip).

THIS DOCUMENT PROVIDED BY THE ABBOTT AEROSPACE
TECHNICAL LIBRARY
ABBOTTAEROSPACE.COM

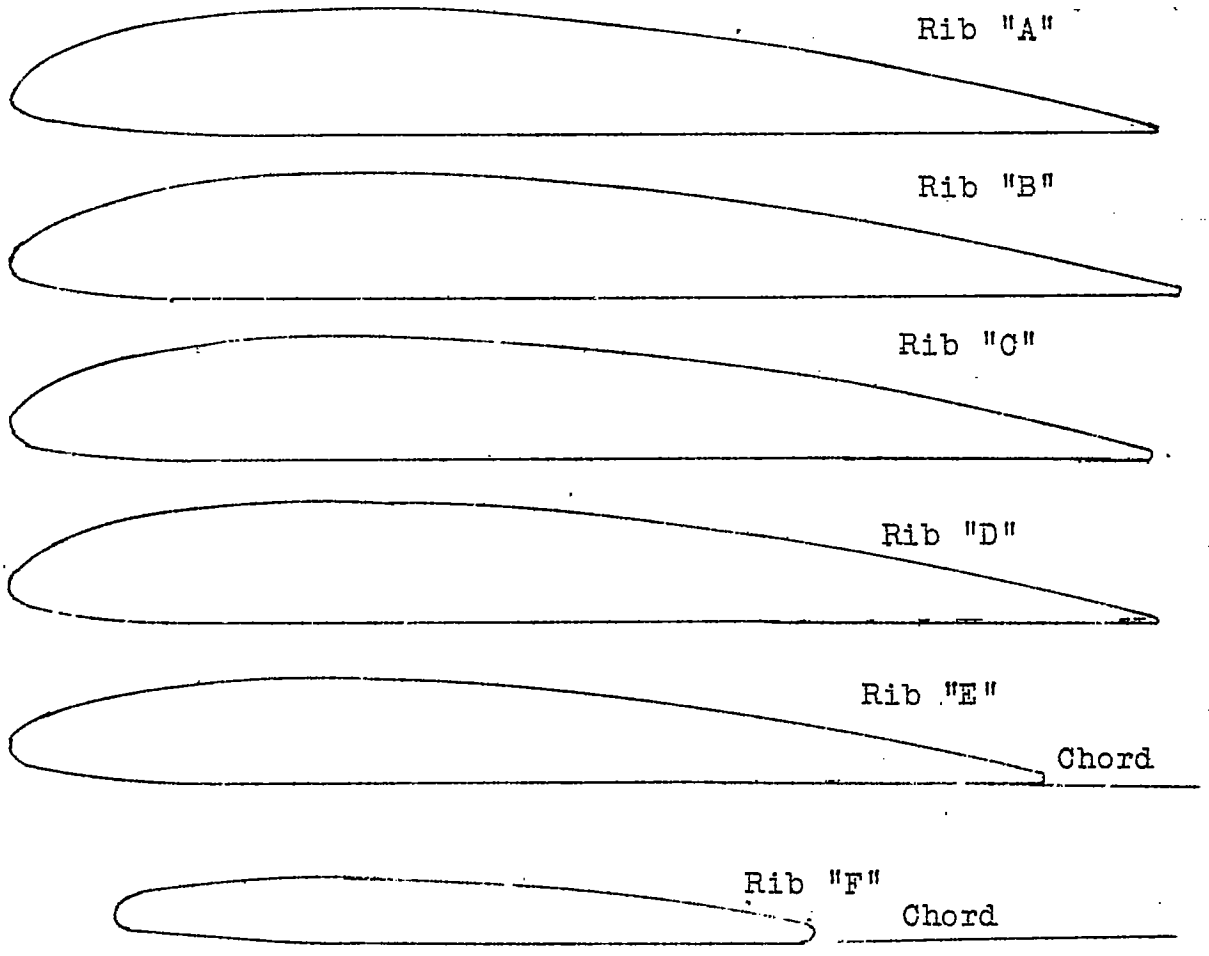

Fig.2 Pressure rib profiles.

THIS DOCUMENT PROVIDED BY THE ABBOTT AEROSPACE
TECHNICAL LIBRARY
ABBOTTAEROSPACE.COM

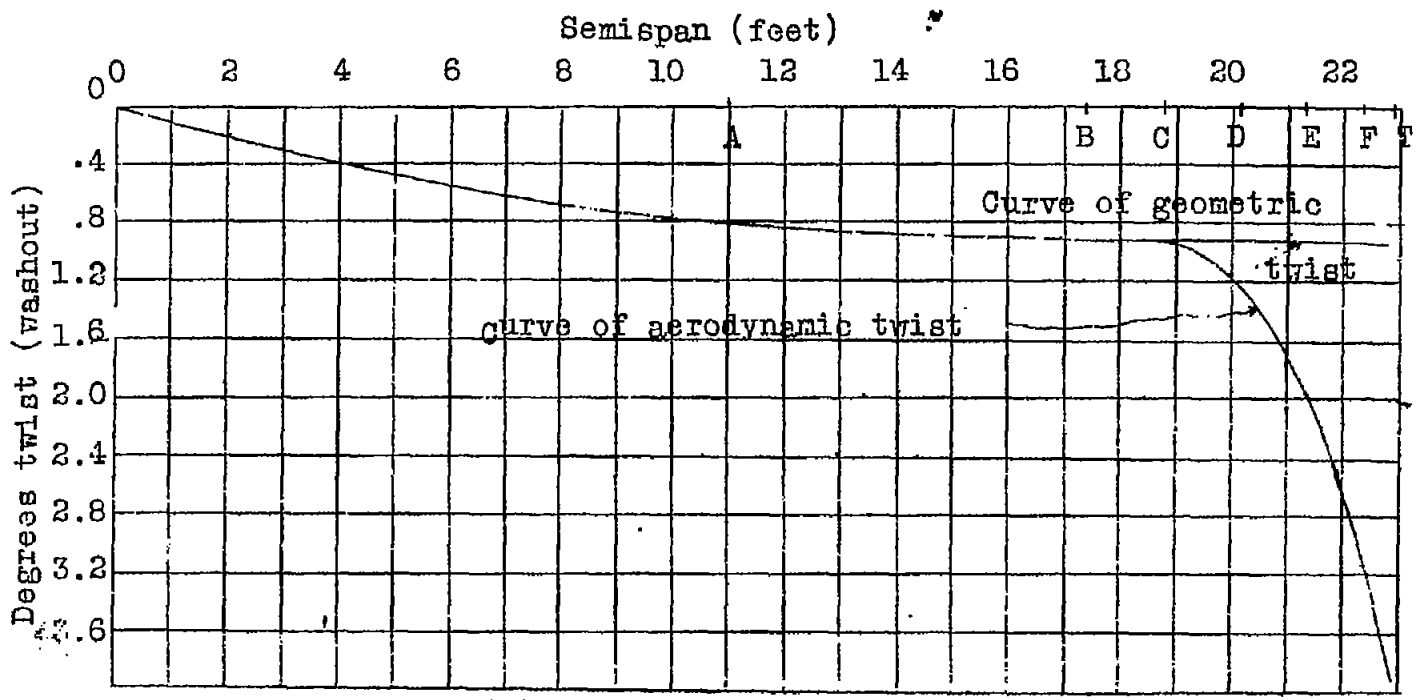

Fig.3 Rigged twist.

THIS DOCUMENT PROVIDED BY THE ABBOTT AEROSPACE
TECHNICAL LIBRARY
ABBOTTAEROSPACE.COM

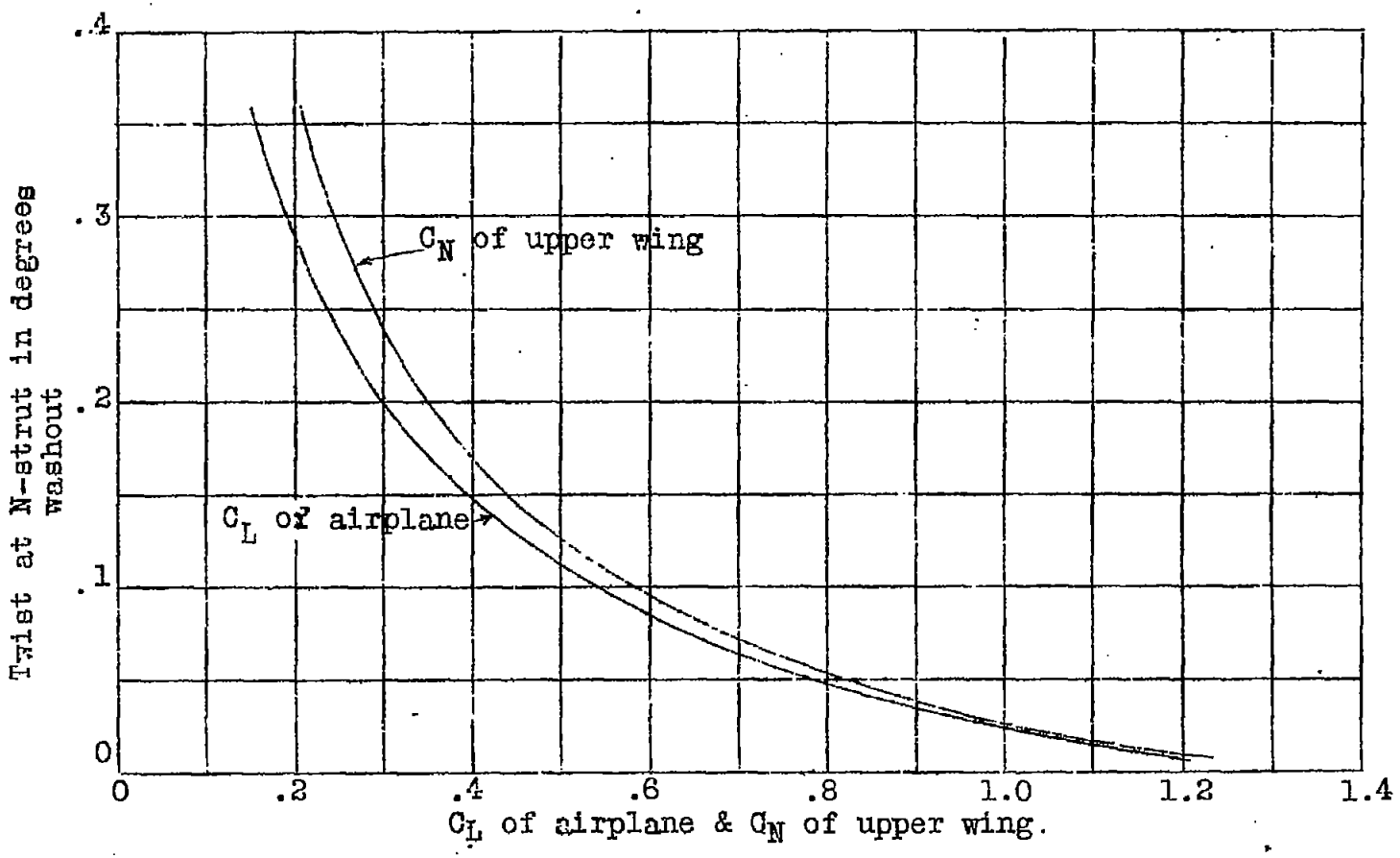

Fig.4 Torsional deflection at N-strut in flight with applied load factor of one.

THIS DOCUMENT PROVIDED BY THE ABBOTT AEROSPACE
TECHNICAL LIBRARY
ABBOTTAEROSPACE.COM

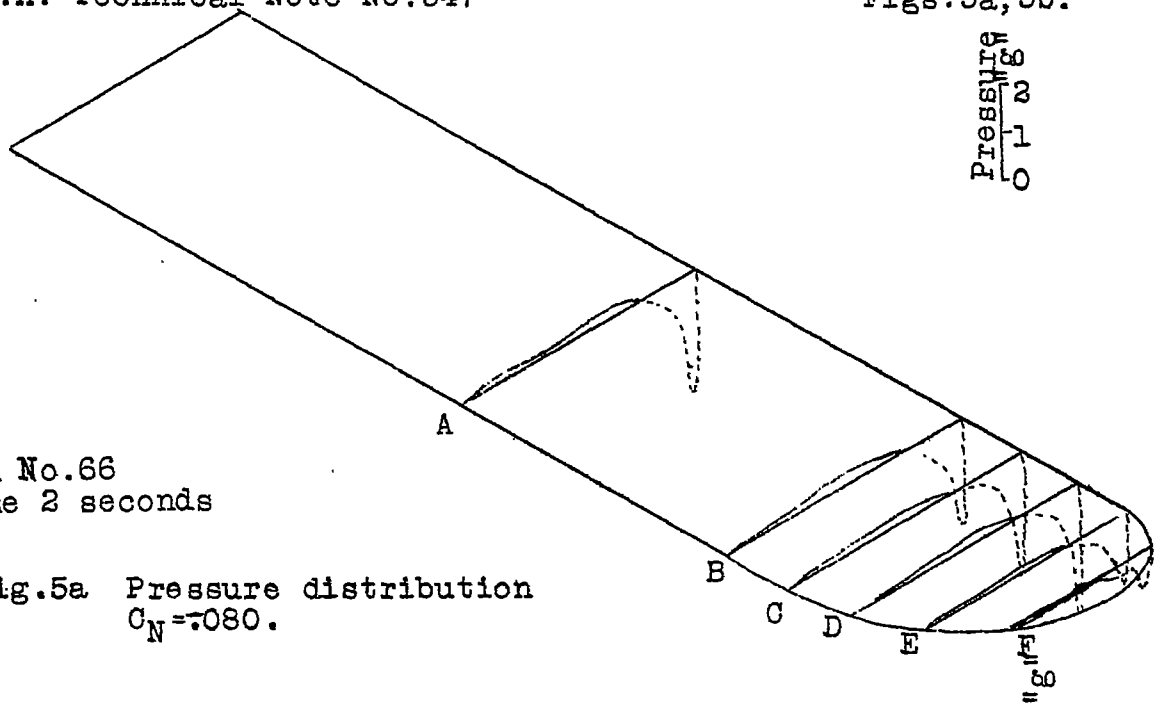

Run No.66
Time 2 seconds

Fig.5a Pressure distribution $C_N = .080$.

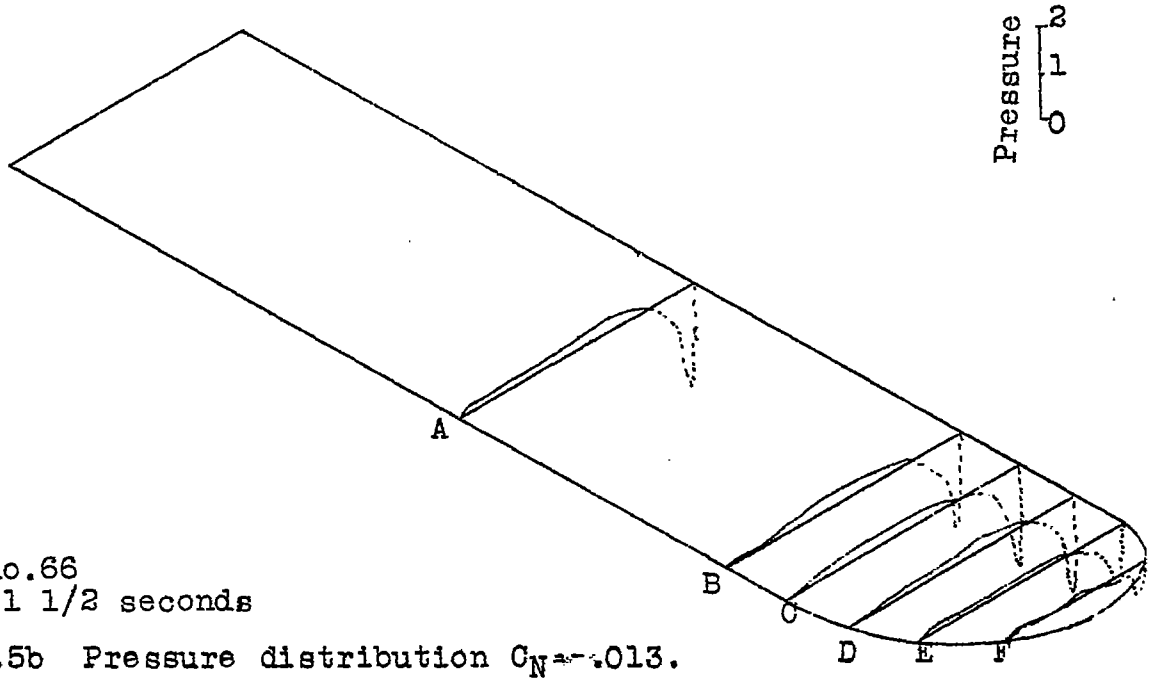

Run No.66
Time 1 1/2 seconds

Fig.5b Pressure distribution $C_N = -.013$.

THIS DOCUMENT PROVIDED BY THE ABBOTT AEROSPACE
TECHNICAL LIBRARY
ABBOTTAEROSPACE.COM

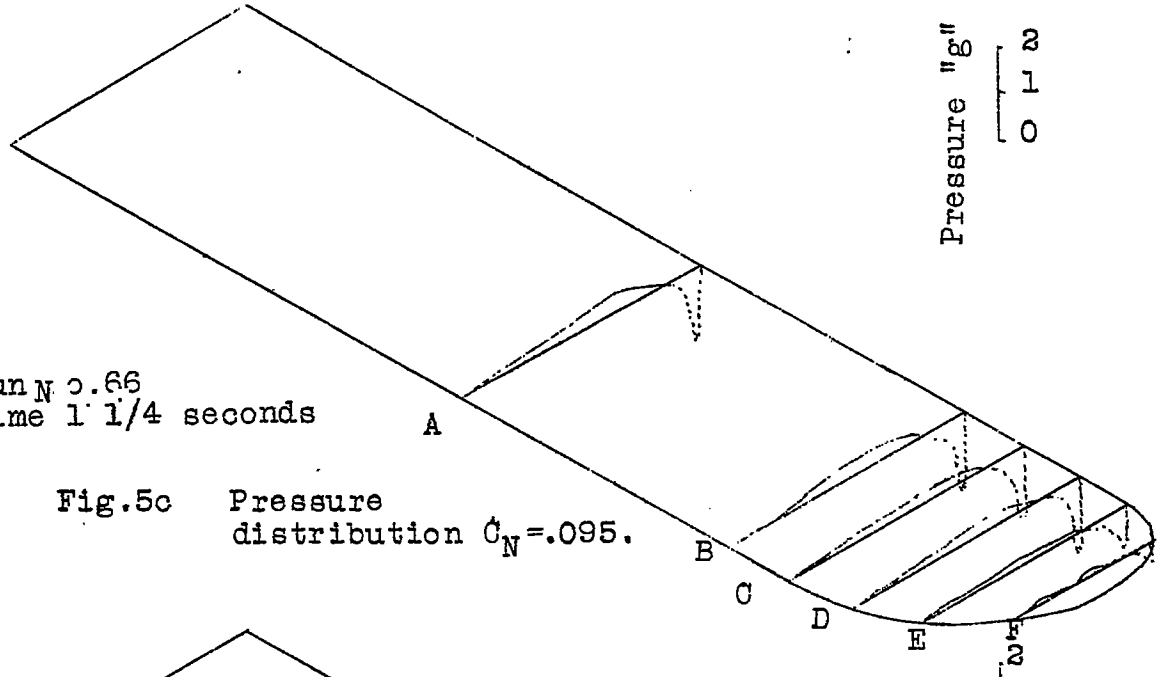

Run No.66
Time 1 1/4 seconds

Fig.5c Pressure distribution C_N=.095.

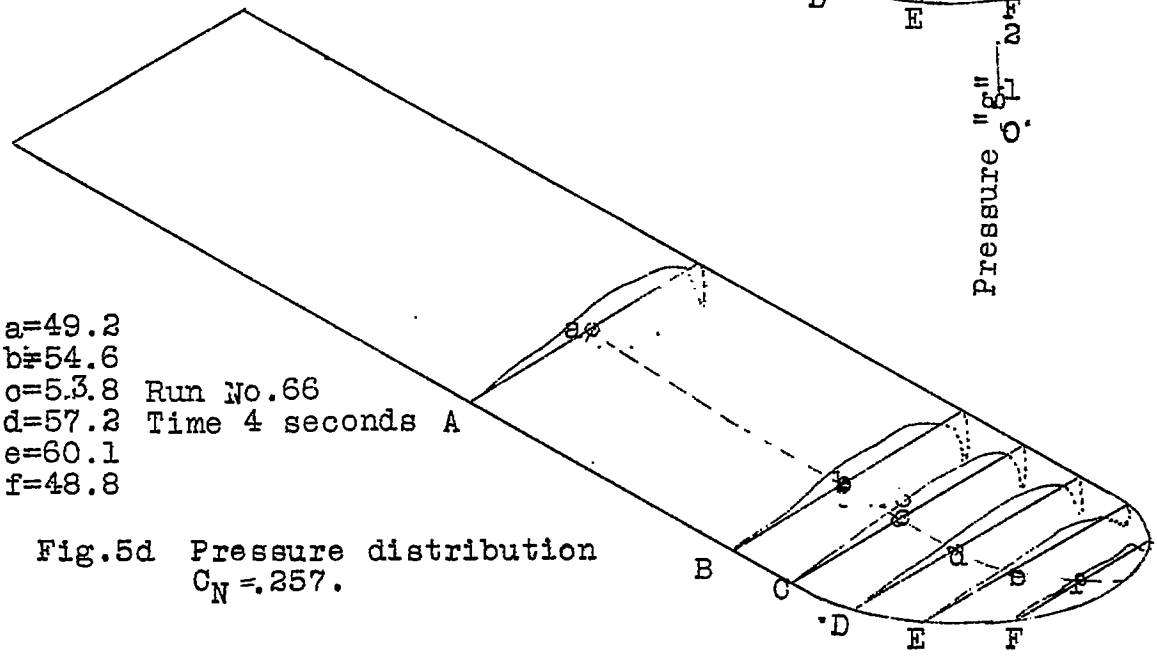

a=49.2
b=54.6
c=53.8 Run No.66
d=57.2 Time 4 seconds
e=60.1
f=48.8

Fig.5d Pressure distribution C_N=.257.

THIS DOCUMENT PROVIDED BY THE ABBOTT AEROSPACE
TECHNICAL LIBRARY
ABBOTTAEROSPACE.COM

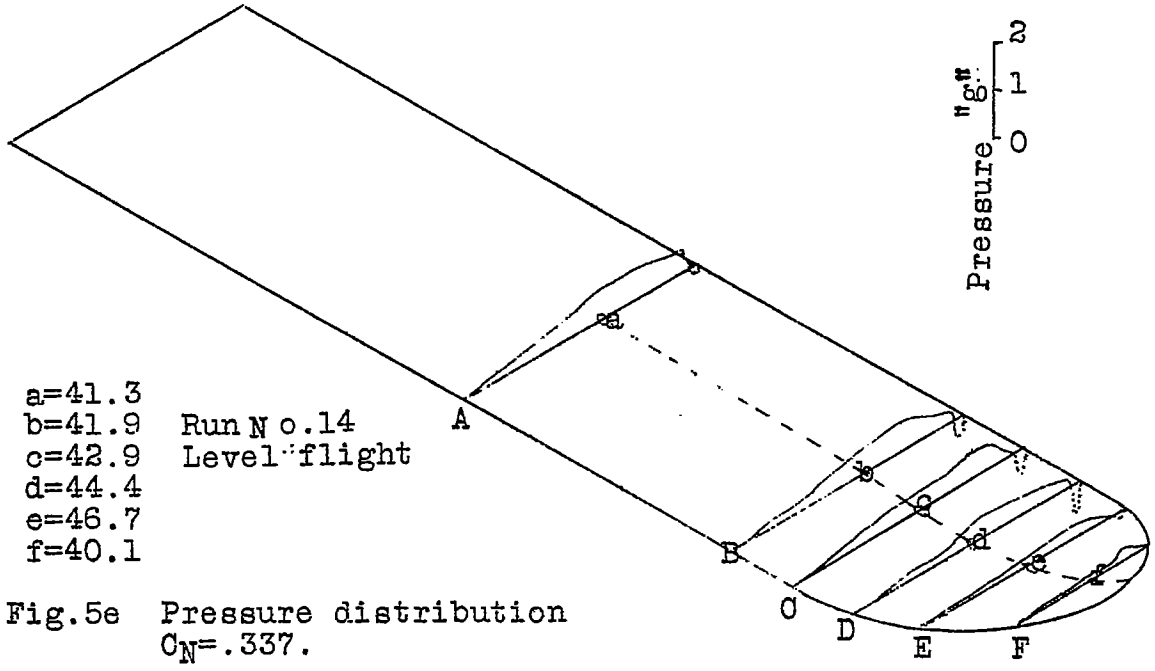

a=41.3
b=41.9
c=42.9
d=44.4
e=46.7
f=40.1

Run No.14
Level flight

Fig.5e Pressure distribution
C_N=.337.

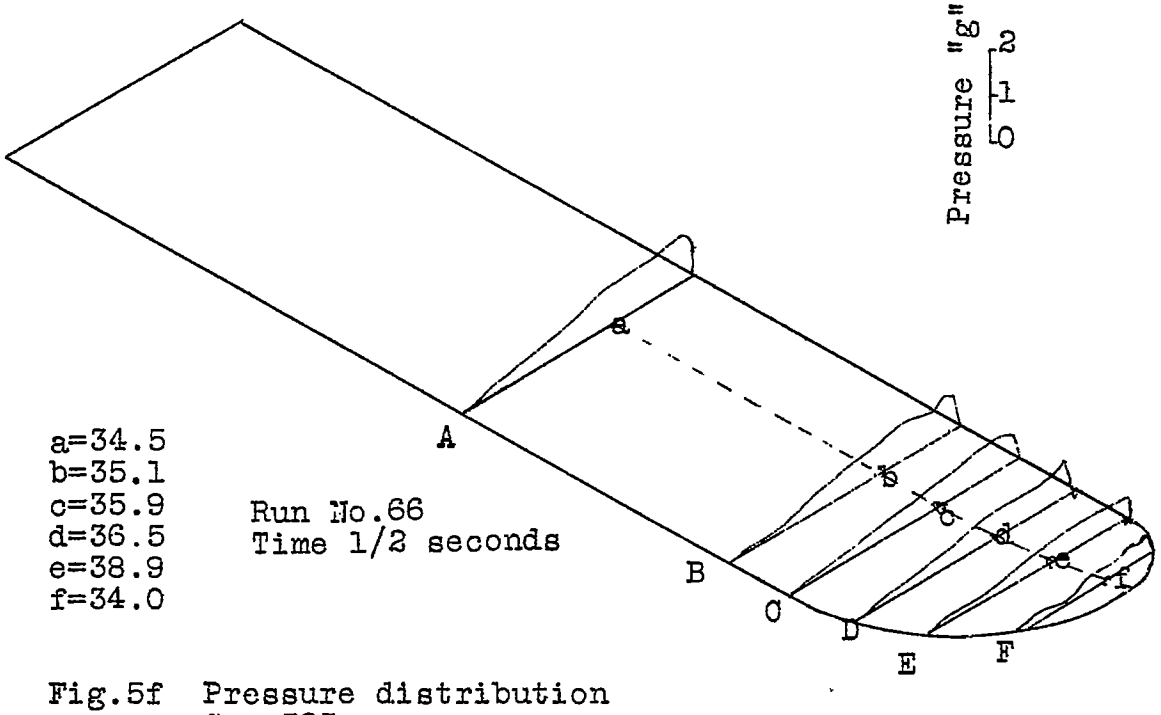

a=34.5
b=35.1
c=35.9
d=36.5
e=38.9
f=34.0

Run No.66
Time 1/2 seconds

Fig.5f Pressure distribution
C_N=.523.

THIS DOCUMENT PROVIDED BY THE ABBOTT AEROSPACE
TECHNICAL LIBRARY
ABBOTTAEROSPACE.COM

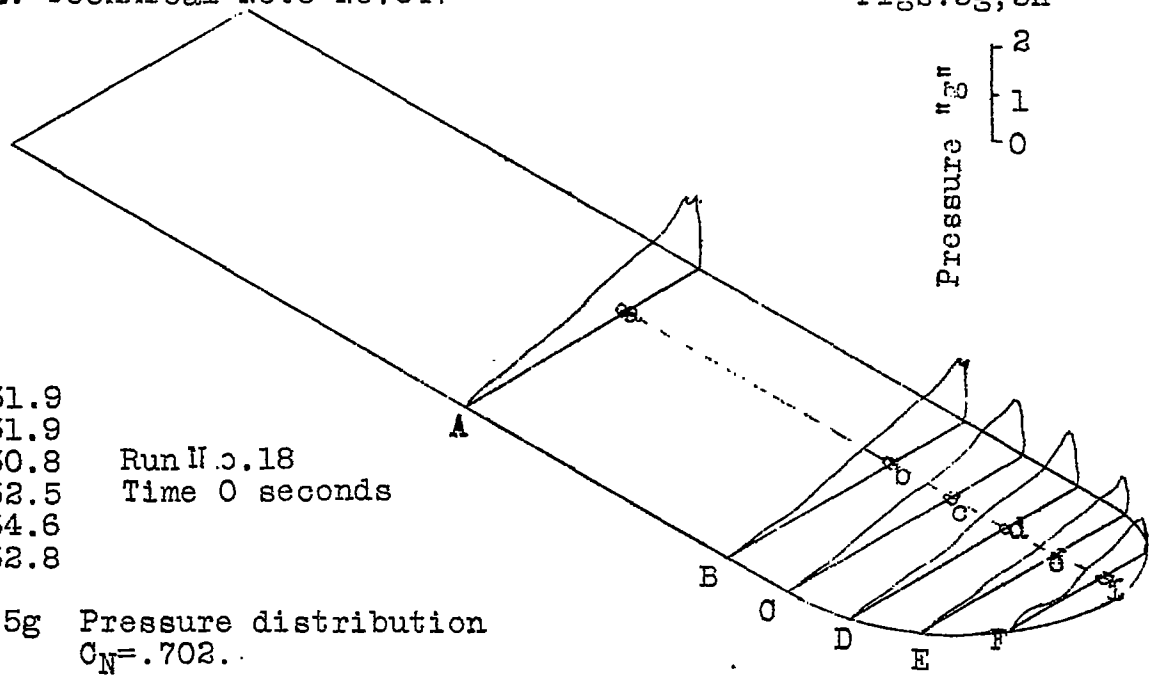

a=31.9
b=31.9
c=30.8
d=32.5
e=34.6
f=32.8

Run No.18
Time 0 seconds

Fig.5g Pressure distribution
C_N=.702.

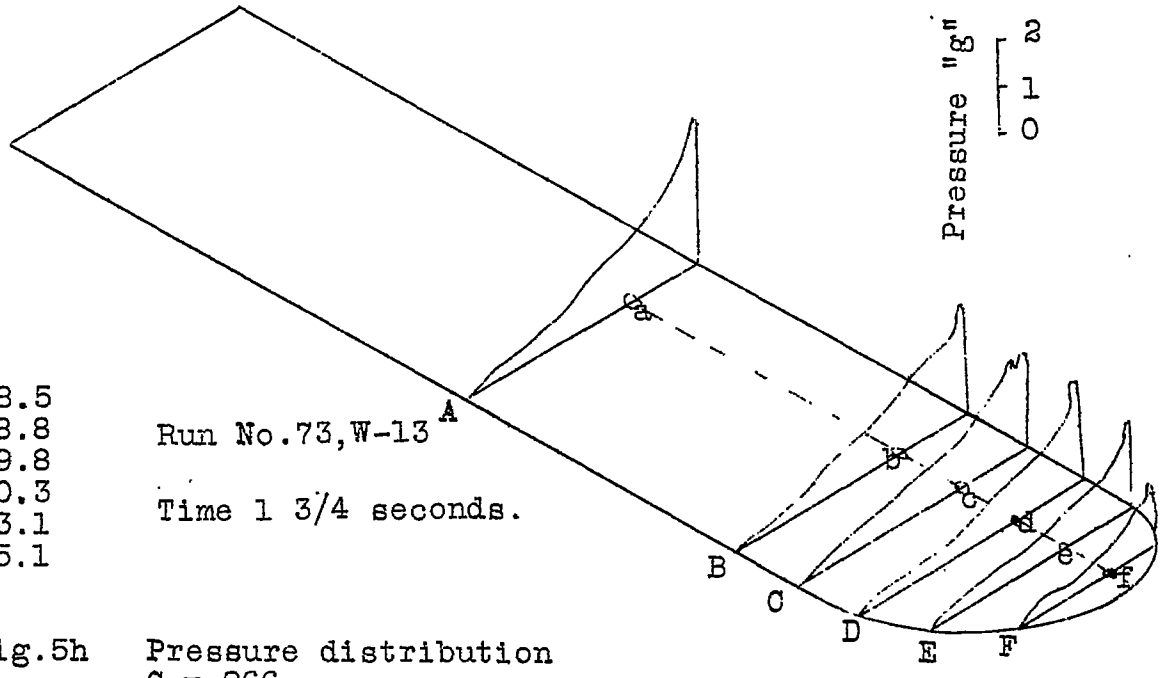

a=28.5
b=28.8
c=29.8
d=30.3
e=33.1
f=35.1

Run No.73,W-13

Time 1 3/4 seconds.

Fig.5h Pressure distribution
C_N=.966.

THIS DOCUMENT PROVIDED BY THE ABBOTT AEROSPACE
TECHNICAL LIBRARY
ABBOTTAEROSPACE.COM

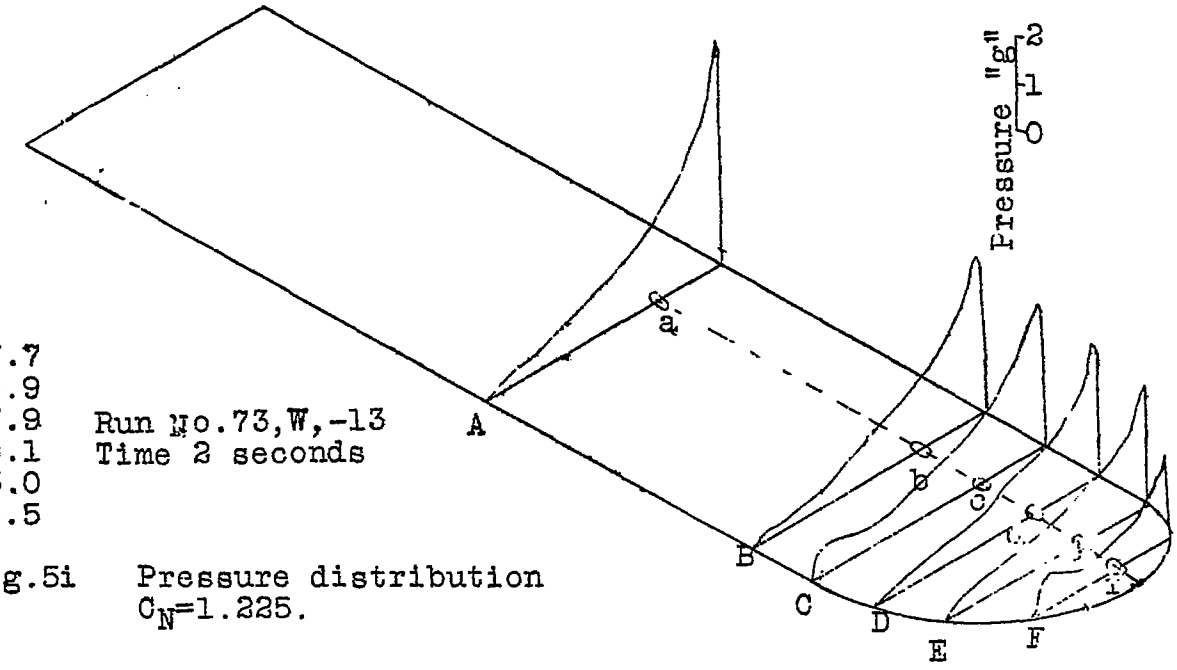

a=27.7
b=26.9
c=27.9
d=29.1
e=33.0
f=39.5

Run No.73,W,-13
Time 2 seconds

Fig.5i Pressure distribution
C_N=1.225.

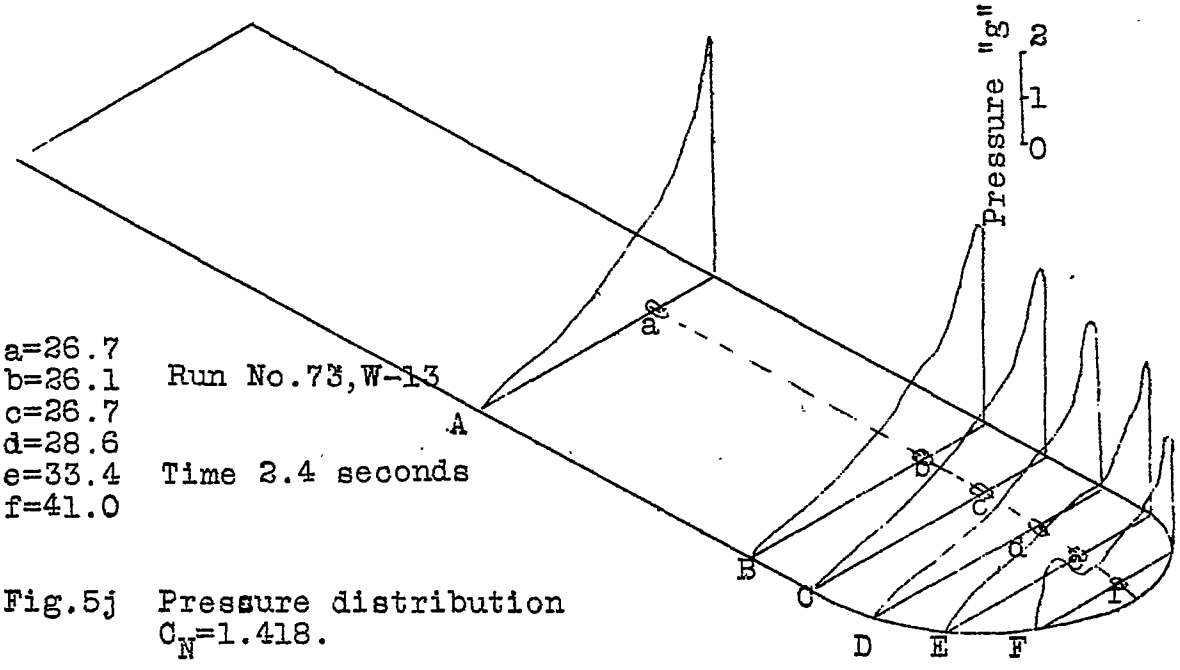

a=26.7
b=26.1
c=26.7
d=28.6
e=33.4
f=41.0

Run No.73,W-13

Time 2.4 seconds

Fig.5j Pressure distribution
C_N=1.418.

THIS DOCUMENT PROVIDED BY THE ABBOTT AEROSPACE
TECHNICAL LIBRARY
ABBOTTAEROSPACE.COM

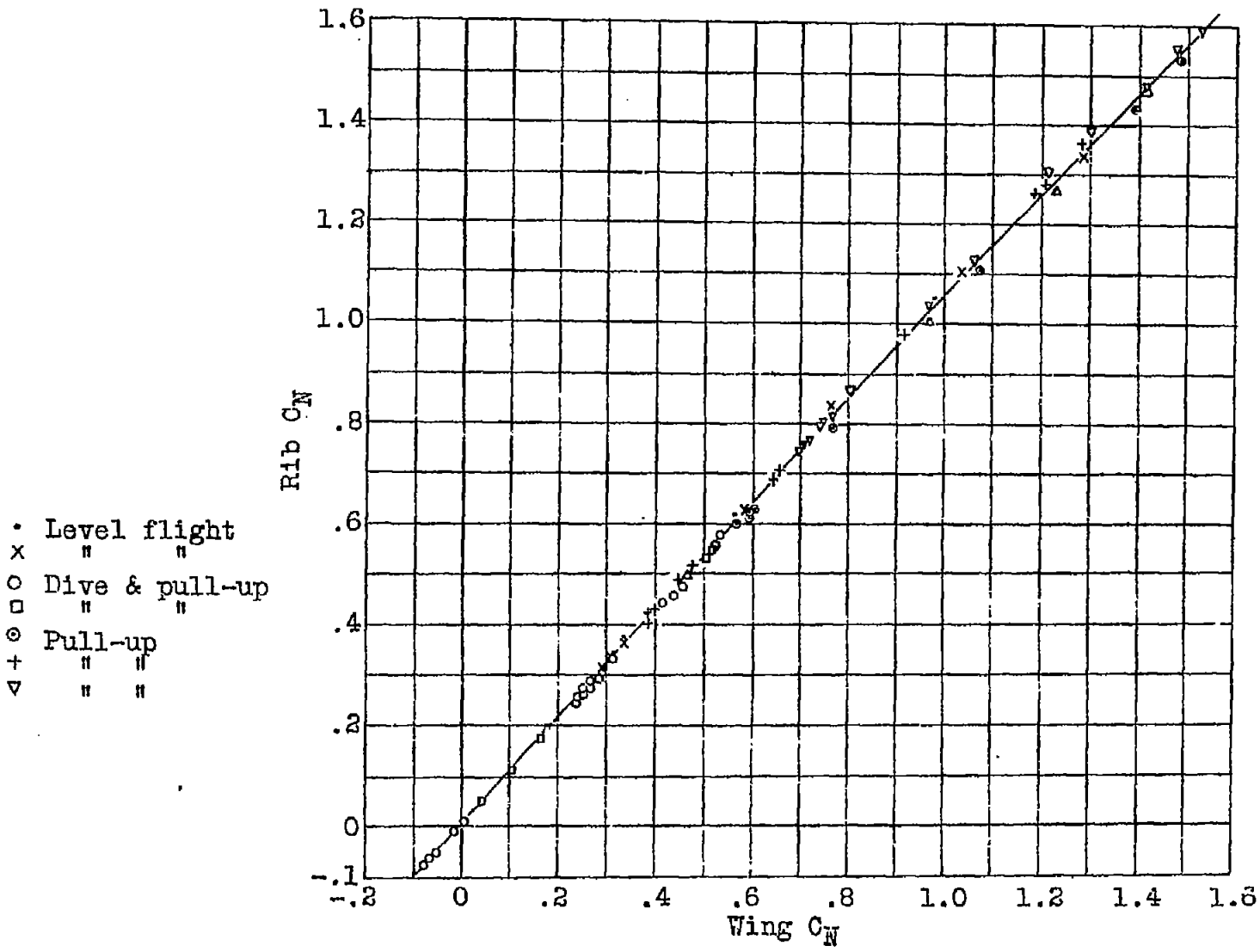

Fig.6 Rib C_N vs wing C_N for rib A, with experimental points.

THIS DOCUMENT PROVIDED BY THE ABBOTT AEROSPACE
TECHNICAL LIBRARY
ABBOTTAEROSPACE.COM

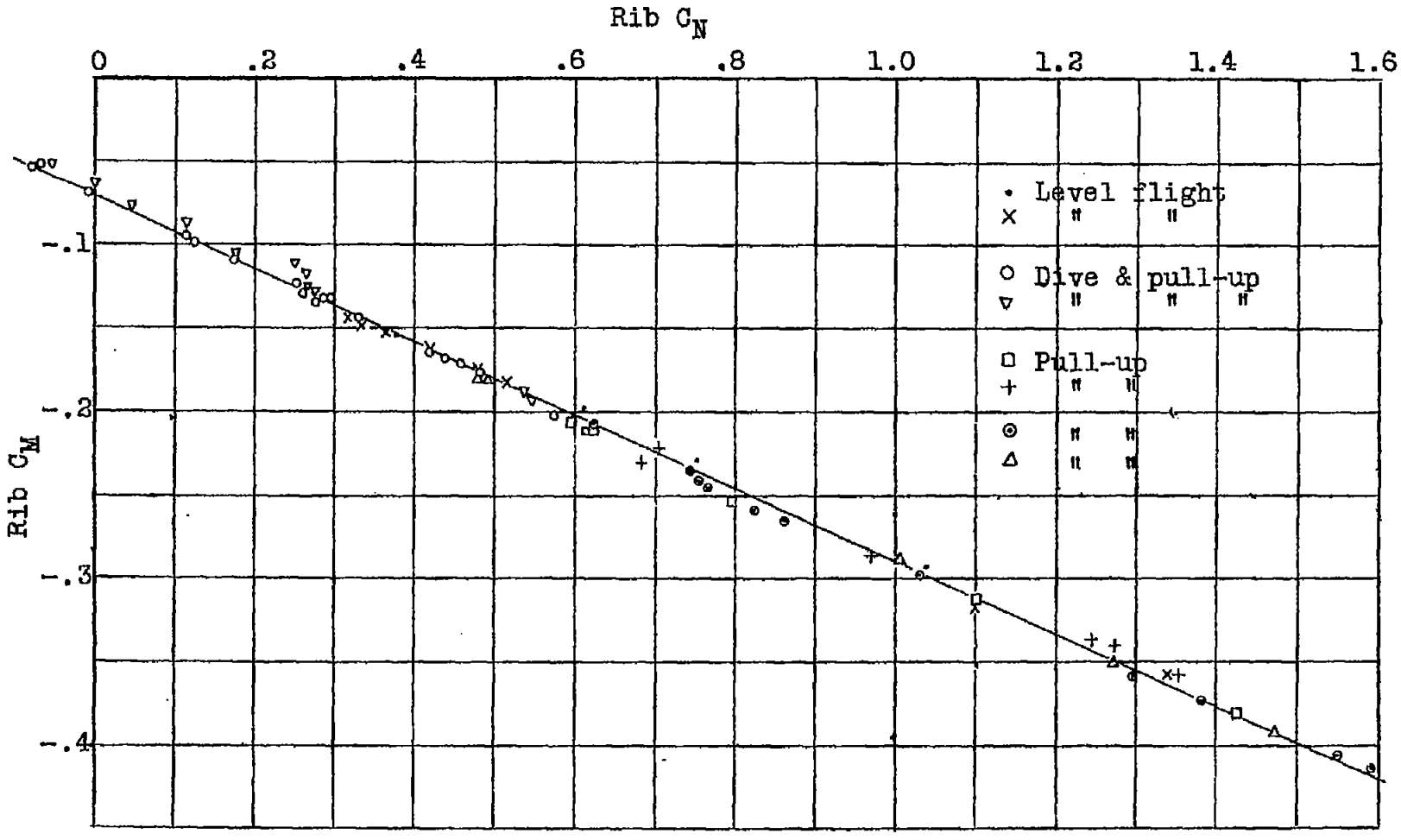

Fig.7 Rib C_M vs rib C_N for rib A, with experimental points.

THIS DOCUMENT PROVIDED BY THE ABBOTT AEROSPACE
TECHNICAL LIBRARY
ABBOTTAEROSPACE.COM

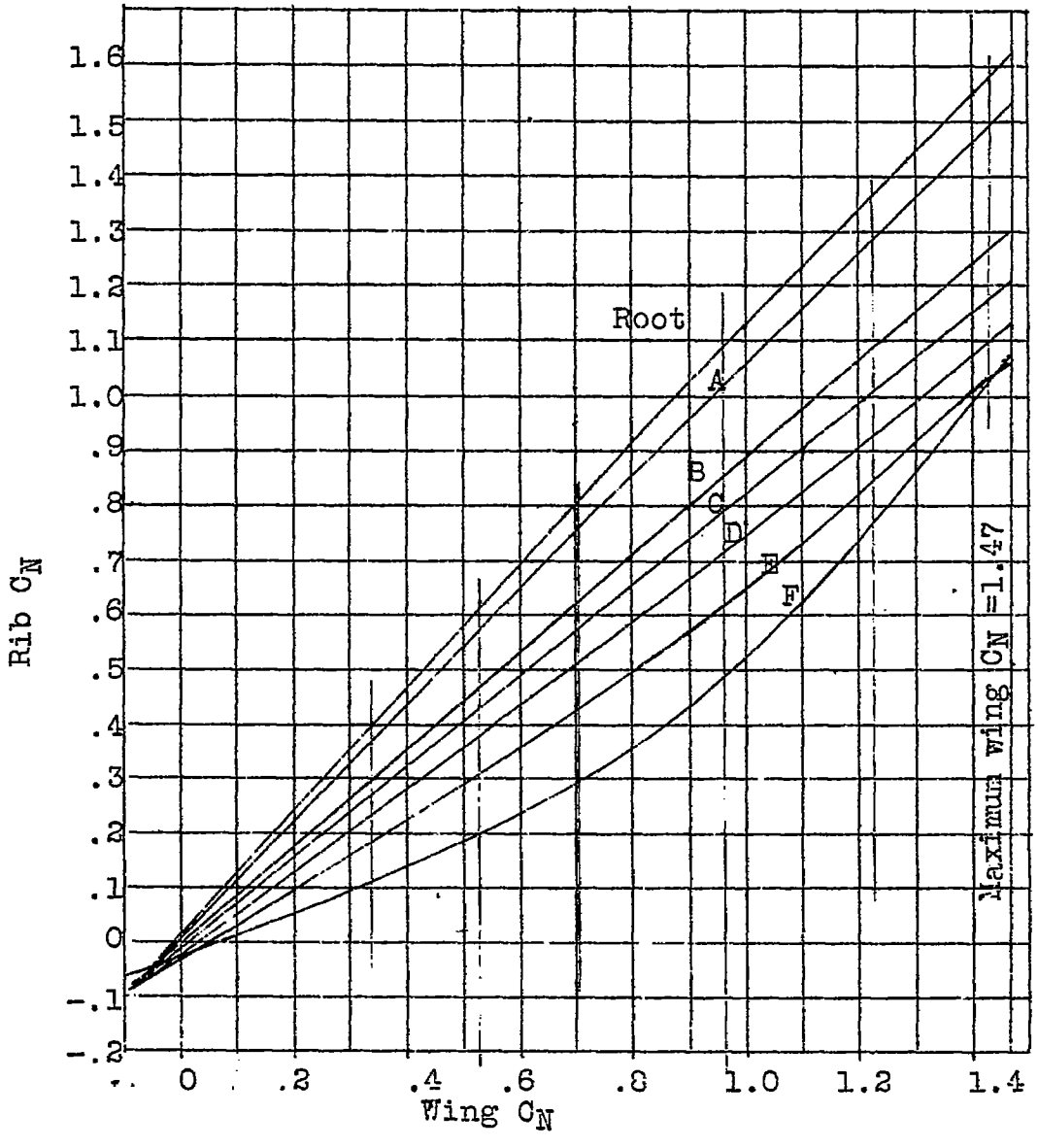

Fig.8 Rib C_N vs. wing C_N.

THIS DOCUMENT PROVIDED BY THE ABBOTT AEROSPACE
TECHNICAL LIBRARY
ABBOTTAEROSPACE.COM

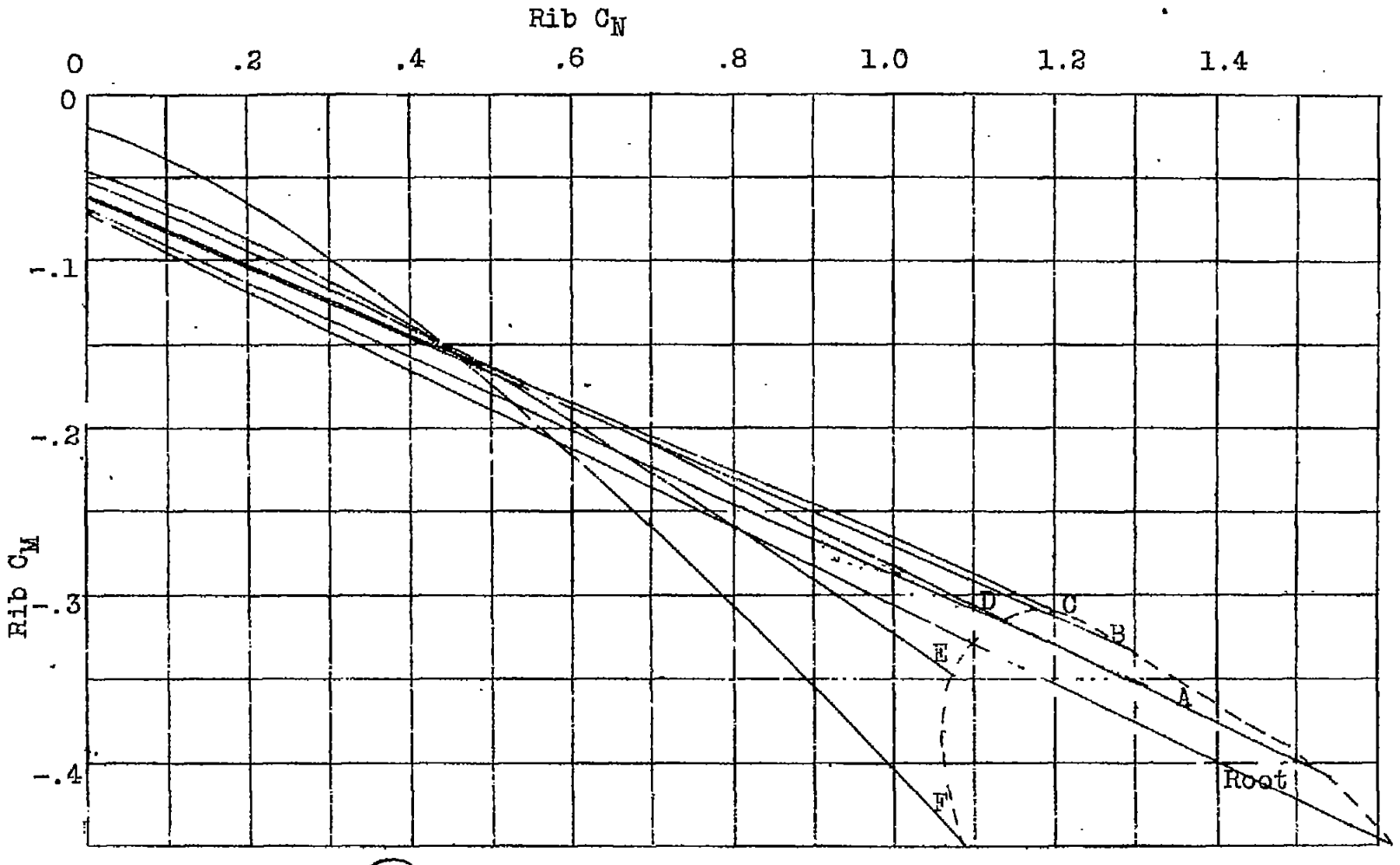

Fig.9 Rib C_M vs. rib C_N.