THIS DOCUMENT PROVIDED BY THE ABBOTT AEROSPACE
TECHNICAL LIBRARY
ABBOTTAEROSPACE.COM
Downloaded from http://www.everyspec.com

MIL-STD-1759
10 JULY 1979

MILITARY STANDARD

RIVETS AND RIVET TYPE FASTENERS PREFERRED FOR DESIGN, LISTING OF

FSC 5320

THIS DOCUMENT PROVIDED BY THE ABBOTT AEROSPACE
TECHNICAL LIBRARY
ABBOTTAEROSPACE.COM
Downloaded from http://www.everyspec.com

MIL-STD-1759
10 JULY 1979

DEPARTMENT OF DEFENSE
Washington, DC 20301

Rivets and Rivet Type Fasteners Preferred For Design, Listing of:

MIL-STD-1759

1. This Military Standard is approved for use by all Departments and Agencies of the Department of Defense.

2. Beneficial comments (recommendations, additions, deletions) and any pertinent data which may be of use in improving this document should be addressed to: Commander, Aeronautical Systems Division (AFSC), ATTN: ASD/ENESS, Wright-Patterson Air Force Base, Ohio 45433 by using the self-addressed Standardization Document Improvement Proposal (DD Form 1426) appearing at the end of this document or by letter.

THIS DOCUMENT PROVIDED BY THE ABBOTT AEROSPACE
Downloaded from http://www.everyspec.com
TECHNICAL LIBRARY
ABBOTTAEROSPACE.COM

FOREWORD

1. The purpose of this bookform standard is to provide a commodity type parts document on rivets and rivet type fasteners to aid military equipment designers and engineers in the selection of preferred rivets and rivet type fasteners.

2. This document consists of an index of preferred standardization documents and a listing of preferred parts within these documents that have been selected with respect to configuration, sizes, lengths, materials, and finishes for rivets and rivet type fasteners.

3. The selection of preferred documents listed in this standard and the selection of part numbers within the preferred documents were made as follows:

a. Selection of Documents

(1) Documents listed or scheduled for listing in the Department of Defense Index of Specifications and Standards (DODISS).

(2) Documents which are active for design.

(3) Documents specifying part numbers (dash numbers) which designate specific sizes, materials and finishes.

b. Selection of Part Numbers

(1) By conducting a thorough search and evaluation of existing DoD procurement information.

(2) By evaluation of preferred parts listed in recent weapon system contracts.

(3) By evaluation of preferred parts lists obtained from industry.

4. To increase the scope and versatility of this rivets and rivet type fasteners standard, periodic revisions will be developed. Results from Standardization studies, MILITARY PARTS CONTROL ADVISORY GROUP (MPCAG) evaluations, evaluation of a new family of rivets and rivet type fasteners and recommendations from interested activities will form the basis for these revisions.

THIS DOCUMENT PROVIDED BY THE ABBOTT AEROSPACE
TECHNICAL LIBRARY
ABBOTTAEROSPACE.COM
Downloaded from http://www.everyspec.com

CONTENTS

Page

Paragraph 1. SCOPE---------- 1

2. REFERENCED DOCUMENTS---------- 2-13

3. DEFINITIONS----------13-14

4. GENERAL STATEMENTS----------14-15

5. DETAILED REQUIREMENTS----------15

6. NOTES----------15

SECTIONS

Section 100 CAP, RIVET

101 Caps, Rivet----------101.1

200 COLLAR, GROOVED, PIN-RIVET

201 Collar Hi-Shear Rivet, 1200°F----------201.1

202 Collar (High Strength) High-Shear Rivet------202.1

203 Collar, Swage Locking for Pull-Type and Stump-Type Lockbolts----------203.1

204 Collar, Swage-Locking; Regular Height, Flanged and Low Profile, Aluminum Alloy, Corrosion Resistant Steel, Carbon Steel and Alloy Steel----------204.1

300 COLLAR, PIN-RIVET, THREADED

301 Nut, Crimp, For Crimplock Fastener System----301.1

302 Nut, Extended Washer, Hexagon-Self-Locking, Low Height, C' Bore----------302.1

303 Nut, Hex and Washer, Self-Aligning, Self-Locking-Shear Pin----------303.1

304 Pin-Rivet Collar, Threaded, Torque-Off, Self-Locking----------304.1

THIS DOCUMENT PROVIDED BY THE ABBOTT AEROSPACE
Downloaded from http://www.everyspec.com
TECHNICAL LIBRARY
ABBOTTAEROSPACE.COM

SECTIONS - Continued

Page

Section 305 Pin-Rivet Collar, Threaded, Torque-Off, Self-Locking (Double Hex)---------- 305.1

400 PIN-RIVET, GROOVED

401 Bolt-Lock, Shear, 100° Head, Pull-Type, Titanium Alloy---------- 401.1

402 Bolt-Lock, Shear, 100° Head, Stump-Type, Titanium Alloy---------- 402.1

403 Bolt-Lock, Shear, Protruding Head, Pull-Type, Titanium Alloy---------- 403.1

404 Bolt-Lock, Shear, Protruding Head, Stump-Type, Titanium Alloy---------- 404.1

405 Bolt-Lock, Tension, 100° Crown Head, Pull-Type Titanium Alloy---------- 405.1

406 Bolt-Lock, Tension, 100° Crown Head, Stump-Type, Titanium Alloy---------- 406.1

407 Bolt-Lock, Tension, 100° Head (MS20426), Pull-Type, Titanium Alloy---------- 407.1

408 Bolt-Lock, Tension, 100° Head (MS20426), Stump-Type, Titanium Alloy---------- 408.1

409 Bolt-Lock, Tension, 100° Head (MS24694), Pull-Type, Titanium Alloy---------- 409.1

410 Bolt-Lock, Tension, 100° Head (MS24694), Stump-Type, Titanium Alloy---------- 410.1

411 Bolt-Lock, Tension, Protruding Head, Pull-Type, Titanium Alloy---------- 411.1

412 Bolt-Lock, Tension, Protruding Head, Stump-Type, Titanium Alloy---------- 412.1

THIS DOCUMENT PROVIDED BY THE ABBOTT AEROSPACE
TECHNICAL LIBRARY
ABBOTTAEROSPACE.COM
Downloaded from http://www.everyspec.com

SECTIONS - Continued

		Page
Section 413	Pin, Swage Locking, A-286 CRES, 100° Head (MS20426), Tension, Pull-Type	413.1
414	Pin, Swage Locking, A-286 CRES, 100° Head (MS24694), Tension, Pull-Type	414.1
415	Pin, Swage Locking, A-286 CRES, 100° Shear Head, Stump-Type	415.1
416	Pin, Swage Locking, A-286 CRES, 100° Shear/ Tension Head, Pull-Type	416.1
417	Pin, Swage Locking, A-286 CRES, Protruding Head, Shear/Tension, Pull-Type	417.1
418	Pin, Swage Locking, A-286 CRES, Protruding Head, Shear, Stump-Type	418.1
419	Pin, Swage Locking, A-286 CRES, Protruding Head, Tension, Pull-Type	419.1
420	Pin, Swage Locking, 108 KSI Steel, 100° Shear/ Tension Head, Pull-Type	420.1
421	Pin, Swage Locking, 108 KSI Steel, Protruding Head, Shear/Tension, Pull-Type	421.1
422	Pin, Swage Locking, Aluminum Alloy, 100° Head (MS20426), Tension, Pull-Type	422.1
423	Pin, Swage Locking, Aluminum Alloy, 100° Head (MS24694), Tension, Pull-Type	423.1
424	Pin, Swage Locking, Aluminum Alloy, 100° Head (MS20426), Tension, Stump-Type	424.1
425	Pin, Swage Locking, Aluminum Alloy, Protruding Head, Tension, Pull-Type	425.1
426	Pin, Swage Locking, Aluminum Alloy, Protruding Head, Tension, Stump-Type	426.1

THIS DOCUMENT PROVIDED BY THE ABBOTT AEROSPACE
Downloaded from http://www.everyspec.com
TECHNICAL LIBRARY
ABBOTTAEROSPACE.COM

SECTIONS - Continued

Page

Section 427 Pin, Swage-Locking, Brazier Head, Straight Shank, Six Locking Grooves. Aluminum Alloy, Corrosion Resistant Steel and Carbon Steel----- 427.1

428 Pin, Swage-Locking, Button Head, Straight Shank, Six Locking Grooves and Multiple Locking Grooves. Aluminum Alloy, Corrosion Resistant Steel and Carbon Steel---------- 428.1

429 Pin, Swage-Locking, Flat 90° Countersunk Head, Straight Shank, Six Locking Grooves and Multiple Locking grooves. Aluminum Alloy, Corrosion Resistant Steel and Carbon Steel---------- 429.1

430 Pin, Swage-Locking, Oval 60° Countersunk Head, Tapered-Section Shank, Multiple Locking Grooves. Aluminum Alloy, Corrosion Resistant Steel and Carbon Steel---------- 430.1

431 Pin, Swage Locking, Steel, 100° Crown Head, Tension, Pull-Type---------- 431.1

432 Pin, Swage Locking, Steel, 100° Head (MS20426) Tension, Stump-Type---------- 432.1

433 Pin, Swage Locking, Steel, 100° Shear Head, Stump-Type---------- 433.1

434 Pin, Swage Locking, Steel, Protruding Head, Shear, Stump-Type---------- 434.1

435 Pin, Swage Locking, Steel, Protruding Head, Tension, Stump-Type---------- 435.1

436 Pin, Swage Locking, Steel, 100° Head (MS20426), Tension, Pull-Type---------- 436.1

437 Pin, Swage Locking, Steel, 100° Head (MS24694), Tension, Pull-Type---------- 437.1

THIS DOCUMENT PROVIDED BY THE ABBOTT AEROSPACE
Downloaded from http://www.everyspec.com
TECHNICAL LIBRARY
ABBOTTAEROSPACE.COM

SECTIONS - Continued

		Page
Section 438	Pin, Swage Locking, Steel, 100° Shear Head, Pull-Type	438.1
439	Pin, Swage Locking, Steel, Protruding Head, Shear, Pull-Type	439.1
440	Pin, Swage Locking, Steel, Protruding Head, Shear, Pull-Type	440.1
441	Pin, Swage-Locking, Truss Head, Straight Shank, Six Locking Grooves and Multiple Locking Grooves. Aluminum Alloy, Corrosion Resistant Steel and Carbon Steel	441.1
442	Pin, Swage Locking, Washer Face, Brazier Head, Straight Shank, Six Locking Grooves. Corrosion Resistant Steel	442.1
500	PIN-RIVET, THREADED	
501	Pin, Crimp, 100° Crown Shear/Tension Head	501.1
502	Pin, Crimp, 100° Flush Shear Head	502.1
503	Pin, Crimp, Protruding Shear Head	503.1
504	Pin, Crimp, Protruding Tension Head	504.1
505	Pin-Rivet, Threaded, Button Head, Straight Shank	505.1
506	Pin-Rivet, Threaded, Button Head, Tapered Shank	506.1
507	Pin-Rivet, Threaded, 60° Countersunk Oval Head, Shank	507.1
508	Pin-Rivet, Threaded, 60° Countersunk Oval Head, Tapered Shank	508.1

THIS DOCUMENT PROVIDED BY THE ABBOTT AEROSPACE
TECHNICAL LIBRARY
ABBOTTAEROSPACE.COM
Downloaded from http://www.everyspec.com

SECTIONS - Continued

		Page
Section 509	Pin-Rivet, Threaded, 90° Countersunk Flat Head, Straight Shank	509.1
510	Pin-Rivet, Threaded, Nail Head, Straight Shank, Corrosion Resistant Steel	510.1
511	Pin-Threaded Shear 100° CSK Head	511.1
512	Pin-Threaded Shear Protruding Head	512.1
600	RIVET, BLIND	
601	Fastener, Blind, High Strength, Pull Type, Positive Mechanical Lock, 100° Flush Head, Corrosion Resisting Steel 95 KSI Fsu	601.1
602	Fastener, Blind, High Strength, Pull Type, Positive Mechanical Lock, Protruding Head, Corrosion Resisting Steel 95 KSI Fsu	602.1
603	Fastener-Blind, Internally Threaded, External Sleeve, Flush Head, Self-Locking	603.1
604	Fastener-Blind, Internally Threaded, External Sleeve, Protruding Head, Self-Locking	604.1
605	Fastener-Blind, Internally Threaded, External Sleeve, Lightweight, Millable Head, Self-Locking	605.1
606	Rivet, Blind-Countersunk Head, Drive Type	606.1
607	Rivet-Blind, 100° Flush Head, Locked Spindle	607.1
608	Rivet-Blind, 100° Flush Head, Mechanically Locked Spindle, Bulbed	608.1

THIS DOCUMENT PROVIDED BY THE ABBOTT AEROSPACE
TECHNICAL LIBRARY
ABBOTTAEROSPACE.COM
Downloaded from http://www.everyspec.com

SECTIONS - Continued

		Page
Section 609	Rivet, Blind-General Purpose, Bulbed, 100° Flush Head, Mechanically-Locked-Spindle	609.1
610	Rivet, Blind-General Purpose, Bulbed, Protruding Head, Mechanically-Locked-Spindle	610.1
611	Rivet, Blind, High Strength, Pull Type, Positive Mechanical Lock, 100° Flush Head, Alloy Steel 112 KSI Fsu	611.1
612	Rivet, Blind, High Strength, Pull Type, Positive Mechanical Lock, Protruding Head, Alloy Steel 112 KSI Fsu	612.1
613	Rivet, Blind, Nonstructural, 100° Flush Head, Class 2	613.1
614	Rivets, Blind, Nonstructural, Retained Mandrel; Closed-End, 120° Countersunk Head; Aluminum Alloy	614.1
615	Rivets, Blind, Nonstructural, Retained Mandrel; Closed-End, Domed Head; Aluminum Alloy	615.1
616	Rivets, Blind, Nonstructural, Retained Mandrel; Open-End, 100° Countersunk Head; Aluminum Alloy	616.1
617	Rivets, Blind, Nonstructural, Retained Mandrel; Open-End, 120° Countersunk Head; Aluminum Alloy	617.1
618	Rivets, Blind, Nonstructural, Retained Mandrel; Open-End, 120° Countersunk Head; Aluminum Alloy, Carbon Steel, Nickel-Copper Alloy	618.1

THIS DOCUMENT PROVIDED BY THE ABBOTT AEROSPACE
TECHNICAL LIBRARY
ABBOTTAEROSPACE.COM
Downloaded from http://www.everyspec.com

SECTIONS - Continued

		Page
Section 619	Rivets, Blind, Nonstructural, Retained Mandrel; Open-End, Domed Head; Aluminum Alloy----------	619.1
620	Rivets, Blind, Nonstructural, Retained Mandrel; Open-End, 3D Domed Head; Aluminum Alloy, Carbon Steel----------	620.1
621	Rivets, Blind, Nonstructural, Retained Mandrel; Open-End, Domed Head; Aluminum Alloy, Carbon Steel, Corrosion Resistant Steel----------	621.1
622	Rivets, Blind, Nonstructural, Retained Mandrel; Open-End, Domed Head; Nickel-Copper Alloy------	622.1
623	Rivets, Blind, Nonstructural, Retained Mandrel; Open-End, Snap Head; Aluminum Alloy----------	623.1
624	Rivet, Blind, Nonstructural, Universal Head, Class I----------	624.1
625	Rivet-Blind, Protruding Head, Locked Spindle---	625.1
626	Rivet-Blind, Protruding Head, Mechanically Locked Spindle, Bulbed----------	626.1
627	Rivet, Blind, Structural, Pull Stem, Self-Plugging, 100° Flush Head, Type II, Class 2----	627.1
628	Rivet, Blind, Structural, Pull Stem, Self-Plugging, Protruding Head, Type I----------	628.1
629	Rivet, Blind-Universal Head, Drive Type--------	629.1
700	RIVET, SOLID	
701	Pin, 100° CSK Head Hi-Shear Rivet, Close Tolerance, 1200° F----------	701.1
702	Pin, Flat Head Hi-Shear Rivet, Close Tolerance, 1200°F----------	702.1

THIS DOCUMENT PROVIDED BY THE ABBOTT AEROSPACE
Downloaded from http://www.everyspec.com
TECHNICAL LIBRARY
ABBOTTAEROSPACE.COM

SECTIONS - Continued

		Page
Section 703	Rivet-100° Countersunk Head Corrosion Resistant Steel	703.1
704	Rivet-100° Countersunk Head Hi-Shear Close Tolerance Head and Shank	704.1
705	Rivet-100° Countersunk Head, Mild Steel	705.1
706	Rivet-Flat Head, Hi-Shear, Close Tolerance Shank	706.1
707	Rivet, Solid-Belt	707.1
708	Rivet, Solid, Button Head, Steel	708.1
709	Rivet, Solid-100° Countersunk Head, Carbon Steel, Corrosion-Resistant Steel, Monel	709.1
710	Rivet, Solid, Countersunk 100°, Precision Head, Aluminum and Aluminum Alloy	710.1
711	Rivet, Solid-Countersunk Head, Brass or Copper-	711.1
712	Rivet-Solid-100° Flush Head A286 Corrosion Resistant Steel	712.1
713	Rivet, Solid, 100° Flush Head, AMS 7229	713.1
714	Rivet, Solid, 100° Flush Head, AMS 7232	714.1
715	Rivet, Solid-100° Flush Head, AMS 7233	715.1
716	Rivet, Solid-100° Flush Head, AMS 7235	716.1
717	Rivet, Solid, 100° Flush Shear Head A286 Corrosion Resistant Steel and Monel	717.1
718	Rivet, Solid-100° Flush Shear Head, Aluminum Alloy	718.1
719	Rivet, Solid-Small, Countersunk Head, Steel, Annealed	719.1
720	Rivet, Solid-Small, Pan Head, Steel, Annealed-	720.1

THIS DOCUMENT PROVIDED BY THE ABBOTT AEROSPACE
TECHNICAL LIBRARY
ABBOTTAEROSPACE.COM
Downloaded from http://www.everyspec.com

SECTIONS - Continued

		Page
Section 721	Rivet, Solid-Tinner's----------	721.1
722	Rivet, Solid-Universal Head, Aluminum and Aluminum Alloy----------	722.1
723	Rivet-Solid Universal Head, A286 Corrosion Resistant Steel----------	723.1
724	Rivet, Solid-Universal Head, AMS 5737----------	724.1
725	Rivet, Solid, Universal Head, AMS 7229---------	725.1
726	Rivet, Solid, Universal Head, AMS 7232---------	726.1
727	Rivet, Titanium, Bimetal, 95 KSI Fsu, 100° Full Flush, Crown Head, Type II----------	727.1
728	Rivet, Titanium, Bimetal, 95 KSI Fsu, Protruding Head, Type I----------	728.1
729	Rivet, Titanium, Bimetal, 95 KSI Fsu, 100° Reduced Flush Crown Head, Type III----------	729.1
800	RIVET, SPLIT	
801	Rivet, Split-Oval Head----------	801.1
900	RIVET, TUBULAR	
901	Rivet-Tubular, 150° Flat Countersunk Head------	901.1
902	Rivet, Tubular-Flat Head----------	902.1
903	Rivet-Tubular, Oval Head----------	903.1

THIS DOCUMENT PROVIDED BY THE ABBOTT AEROSPACE
TECHNICAL LIBRARY
ABBOTTAEROSPACE.COM
Downloaded from http://www.everyspec.com

THIS DOCUMENT PROVIDED BY THE ABBOTT AEROSPACE
Downloaded from http://www.everyspec.com
TECHNICAL LIBRARY
ABBOTTAEROSPACE.COM

1. SCOPE

1.1 Scope. This standard provides a listing of preferred rivets and rivet type fasteners encompassing the following characteristics:

a. Configuration

b. Size

c. Materials

d. Protective Coatings and Finishes

1.2 Purpose. The purpose of this standard is as follows:

a. provide the designer with a listing of preferred rivets and rivet type fasteners to promote their use in design of weapon systems and equipments.

b. control and minimize the variety of rivets and rivet type fasteners used in military equipment thereby facilitating logistic support of the equipment during its life cycle.

1.3 Application. To minimize the proliferation of rivets and rivet type fasteners only the preferred part numbers listed herein are authorized for use in new design. All other part numbers, even though shown on current Military Specification Sheets, Military Standards (MS), National Aerospace Standards (NAS), Aeronautical Standards (AS), and Air Force/Navy Aeronautical Standards (AN), are not approved for use in new design unless approved by the cognizant Government procuring activity.

1.4 Intended use. Implement this standard by including one of the following options in the contract:

a. Require this standard as a supplement to an end use type standard such as MIL-STD-1471 or MIL-STD-1515. When thus required, only the rivets and rivet type fasteners listed in both the end use type and this standard are acceptable. Use of other rivets and rivet type fasteners requires approval of the Government procuring activity.

b. Require this standard as a guide to be used with an end use type standard such as MIL-STD-1471 or MIL-STD-1515. When thus required, the rivets and rivet type fasteners listed in the end use type standard and this standard are acceptable. The designer must assure himself the rivets and rivet type fasteners listed in both the

THIS DOCUMENT PROVIDED BY THE ABBOTT AEROSPACE
Downloaded from http://www.everyspec.com
TECHNICAL LIBRARY
ABBOTTAEROSPACE.COM

end use type standard and this standard are not adequate for his requirement before using rivets and rivet type fasteners not listed herein. Use of rivets and rivet type fasteners not listed in the end use type standard requires approval of the Government procuring activity.

c. Require this standard and indicate exceptions to it. When thus required, only the rivets and rivet type fasteners listed in this standard and not excluded by the exceptions are acceptable. Use of other rivets and rivet type fasteners requires approval of the Government procuring activity.

d. Require this standard as a guide. When thus required, the designer must assure himself the rivets and rivet type fasteners listed in this standard are not adequate for the requirement before using other rivets and rivet type fasteners.

2. REFERENCED DOCUMENTS

2.1 Issues of documents. The following documents of the issue in effect on date of invitation for bids or request for proposal form a part of this standard to the extent specified herein.

SPECIFICATIONS

MILITARY

MIL-P-23469/1 - Collar, Swage-Locking; Regular Height, Flanged and Low Profile, Aluminum Alloy, Corrosion Resistant Steel, Carbon Steel and Alloy Steel.

MIL-P-23469/2 - Pin, Swage-Locking, Brazier Head, Straight Shank, Six Locking Groove. Aluminum Alloy, Corrosion Resistant Steel and Carbon Steel.

MIL-P-23469/3 - Pin, Swage-Locking, Washer Face, Brazier Head, Straight Shank, Six Locking Grooves. Corrosion Resistant Steel.

MIL-P-23469/4 - Pin, Swage-Locking, Button Head, Straight Shank, Six Locking Groove and Multiple Locking Groove. Aluminum Alloy, Corrosion Resistant Steel and Carbon Steel.

MIL-P-23469/5 - Pin, Swage-Locking, Truss Head, Straight Shank, Six Locking Groove and Multiple Locking Groove. Aluminum Alloy, Corrosion Resistant Steel and Carbon Steel.

THIS DOCUMENT PROVIDED BY THE ABBOTT AEROSPACE
Downloaded from http://www.everyspec.com
TECHNICAL LIBRARY
ABBOTTAEROSPACE.COM

SPECIFICATIONS

MILITARY - Continued

MIL-P-23469/6 - Pin, Swage-Locking, Flat 90° Countersunk Head, Straight Shank, Six Locking Groove and Multiple Locking Groove. Aluminum Alloy, Corrosion Resistant Steel and Carbon Steel.

MIL-P-23469/7 - Pin, Swage-Locking, Oval 60° Countersunk Head, Tapered-Section Shank, Multiple Locking Grooves. Aluminum Alloy, Corrosion Resistant Steel and Carbon Steel.

MIL-P-23470/1 - Pin-Rivet, Threaded, Button Head, Straight Shank, Corrosion Resistant Steel.

MIL-P-23470/2 - Pin-Rivet, Threaded, Button Head, Tapered Shank, Corrosion Resistant Steel.

MIL-P-23470/3 - Pin-Rivet, Threaded, Nail Head, Straight Shank, Corrosion Resistant Steel.

MIL-P-23470/4 - Pin-Rivet, Threaded, 90° Countersunk, Flat Head, Straight Shank, Carbon Steel.

MIL-P-23470/5 - Pin-Rivet, Threaded, Button Head, Straight Shank, Carbon Steel.

MIL-P-23470/6 - Pin-Rivet, Threaded, Button Head, Tapered Shank, Carbon Steel.

MIL-P-23470/7 - Pin-Rivet, Threaded, 60° Countersunk Oval Head, Straight Shank, Carbon Steel.

MIL-P-23470/8 - Pin-Rivet, Threaded, 60° Countersunk Oval Head, Tapered Shank, Carbon Steel.

MIL-P-23470/9 - Pin-Rivet, Threaded, 90° Countersunk, Flat Head, Straight Shank, Corrosion Resistant Steel.

MIL-P-23470/10 - Pin-Rivet, Threaded, Button Head, Straight Shank, Corrosion Resistant Steel.

MIL-P-23470/11 - Pin-Rivet, Threaded, 60° Countersunk Oval Head, Straight Shank, Corrosion Resistant Steel.

THIS DOCUMENT PROVIDED BY THE ABBOTT AEROSPACE
Downloaded from http://www.everyspec.com
TECHNICAL LIBRARY
ABBOTTAEROSPACE.COM

SPECIFICATION

MILITARY - Continued

MIL-P-23470/12 - Pin-Rivet, Threaded, 60° Countersunk Oval Head, Tapered Shank, Corrosion Resistant Steel.

MIL-P-23470/13 - Pin-Rivet, Threaded, 90° Countersunk Flat Head, Straight Shank, Aluminum Alloy.

MIL-P-23470/14 - Pin-Rivet, Threaded, Button Head, Straight Shank, Aluminum Alloy.

MIL-P-23470/15 - Pin-Rivet, Threaded, Button Head, Tapered Shank, Aluminum Alloy.

MIL-P-23470/16 - Pin-Rivet, Threaded, 60° Countersunk Oval Head, Straight Shank, Aluminum Alloy.

MIL-P-23470/17 - Pin-Rivet, Threaded, 60° Countersunk Oval Head, Tapered Shank, Aluminum Alloy.

MIL-P-23470/18 - Pin-Rivet Collar, Threaded, Torque-off, Self-Locking, Carbon Steel.

MIL-P-23470/19 - Pin-Rivet Collar, Threaded, Torque-off, Self-Locking, Carbon Steel (Double Hex).

MIL-P-23470/20 - Pin-Rivet Collar, Threaded, Torque-off, Self-Locking, Corrosion Resistant Steel.

MIL-P-23470/21 - Pin-Rivet Collar, Threaded, Torque-off, Self-Locking, Corrosion Resistant Steel (Double Hex).

MIL-P-23470/22 - Pin-Rivet Collar, Threaded, Torque-off, Self-Locking, Aluminum Alloy.

MIL-P-23470/23 - Pin-Rivet Collar, Threaded, Torque-off, Self-Locking, Aluminum Alloy (Double Hex).

MIL-R-24243/1 - Rivets, Blind, Nonstructural, Retained Mandrel; Open-End, Domed Head; Aluminum Alloy, Carbon Steel, Corrosion Resistant Steel.

MIL-R-24243/2 - Rivets, Blind, Nonstructural, Retained Mandrel; Open-End, Domed Head; Nickel-Copper Alloy.

THIS DOCUMENT SCANNED BY THE ABBOTT AEROSPACE
Downloaded from http://www.everyspec.com
TECHNICAL LIBRARY
ABBOTTAEROSPACE.COM

SPECIFICATIONS

MILITARY - Continued

MIL-R-24243/3 - Rivets, Blind, Nonstructural, Retained Mandrel; Open-End, 3 D Domed Head; Aluminum Alloy, Carbon Steel.

MIL-R-24243/4 - Rivets, Blind, Nonstructural, Retained Mandrel; Open-End, 100° Countersunk Head; Aluminum Alloy.

MIL-R-24243/5 - Rivets, Blind, Nonstructural, Retained Mandrel; Open-End, 120° Countersunk Head; Aluminum Alloy, Carbon Steel, Nickel-Copper Alloy.

MIL-R-24243/6 - Rivets, Blind, Nonstructural, Retained Mandrel; Closed-End, Domed Head; Aluminum Alloy.

MIL-R-24243/7 - Rivets, Blind, Nonstructural, Retained Mandrel; Closed-End, 120° Countersunk Head; Aluminum Alloy.

MIL-R-24243/8 - Rivets, Blind, Nonstructural, Retained Mandrel; Open-End, Snap Head; Aluminum Alloy.

MIL-R-24243/9 - Rivets, Blind, Nonstructural, Retained Mandrel; Open-End, 120° Countersunk Head; Aluminum Alloy.

MIL-R-24243/10 - Rivets, Blind, Nonstructural, Retained Mandrel; Open-End, Domed Head; Aluminum Alloy.

MIL-R-83459/1 - Rivet, Titanium, Bimetal, 95 KSI Fsu, Protruding Head, Type I.

MIL-R-83459/2 - Rivet, Titanium, Bimetal, 95 KSI Fsu, 100° Full Flush, Crown Head, Type II.

MIL-R-83459/3 - Rivet, Titanium; Bimetal, 95 KSI Fsu, 100° Reduced Flush Crown Head, Type III

STANDARDS

MILITARY

MS9318 - Rivet, Solid-100° Flush Head, AMS7233.

MS9403 - Rivet, Solid-Universal Head, AMS5737.

THIS DOCUMENT PROVIDED BY THE ABBOTT AEROSPACE
TECHNICAL LIBRARY
ABBOTTAEROSPACE.COM
Downloaded from http://www.everyspec.com

STANDARDS

MILITARY - Continued

MS9460 - Rivet, Solid-100° Flush Head, AMS7235.

MS16535 - Rivet-Tubular, Oval Head.

MS16536 - Rivet-Tubular, 150° Flat Countersunk Head.

MS20426 - Rivet, Solid, Countersunk 100°, Precision Head, Aluminum and Aluminum Alloy.

MS20427 - Rivet, Solid-100° Countersunk Head, Carbon Steel, Corrosion-Resistant Steel, Monel and Copper.

MS20470 - Rivet, Solid-Universal Head, Aluminum and Aluminum Alloy.

MS20600 - Rivet, Blind, Structural, Pull Stem, Self-Plugging, Protruding Head, Type II, Class 1.

MS20601 - Rivet, Blind, Structural, Pull Stem, Self-Plugging, 100° Flush Head, Type I.

MS20604 - Rivet, Blind, Nonstructural, Universal Head, Class I.

MS20605 - Rivet, Blind, Nonstructural, 100° Flush Head, Class 2.

MS20613 - Rivet, Solid-Universal Head, Steel, Carbon, and Steel, Corrosion-Resistant.

MS20615 - Rivet, Solid-Universal Head, Brass, Copper and Nickel-Copper Alloy.

MS21140 - Fastener, Blind, High Strength, Pull Type, Positive Mechanical Lock, 100° Flush Head, Corrosion Resisting Steel 95 KSI Fsu.

MS21141 - Fastener, Blind, High Strength, Pull Type, Positive Mechanical Lock, Protruding Head, Corrosion Resisting Steel 95 KSI Fsu.

MS24661 - Rivet, Blind-Countersunk Head, Drive Type.

THIS DOCUMENT PROVIDED BY THE ABBOTT AEROSPACE
Downloaded from http://www.everyspec.com
TECHNICAL LIBRARY
ABBOTTAEROSPACE.COM

STANDARDS

MILITARY - Continued

MS24662 - Rivet, Blind-Universal Head, Drive Type.

MS35684 - Rivet, Split-Oval Head, Steel.

MS35685 - Rivet, Split-Oval Head, Brass.

MS35743 - Rivet, Solid-Small, Pan Head, Steel, Annealed.

MS35744 - Rivet, Solid-Small, Countersunk Head, Steel, Annealed.

MS35745 - Rivet, Solid-Belt.

MS51829 - Rivet, Solid, Button Head, Steel.

MS51924 - Caps, Rivet.

MS51931 - Rivet, Solid-Tinner's.

MS51942 - Rivet, Tubular-Flat Head.

MS51945 - Rivet, Solid-Countersunk Head, Brass or Copper.

MS90353 - Rivet, Blind, High Strength, Pull Type, Positive Mechanical Lock, 100° Flush Head, Alloy Steel 112 KSI Fsu.

MS90354 - Rivet, Blind, High Strength, Pull Type, Positive Mechanical Lock, Protruding Head, Alloy Steel 112 KSI Fsu.

AIR FORCE - NAVY AERONAUTICAL

AN123151 thru AN123300 - Rivet, Solid, Universal Head, AMS7229.

AN123301 thru AN123450 - Rivet, Solid, Universal Head, AMS7232.

AN123451 thru AN123600 - Rivet, Solid, 100° Flush Head, AMS7229.

AN123601 thru AN123750 - Rivet, Solid, 100° Flush Head, AMS7232.

AN124951 thru AN125100 - Rivet-100° Countersunk Head Corrosion Resistant Steel.

THIS DOCUMENT PROVIDED BY THE ABBOTT AEROSPACE
Downloaded from http://www.everyspec.com
TECHNICAL LIBRARY
ABBOTTAEROSPACE.COM

(Copies of specifications, standards, drawings, and publications required by contractors in connection with specific procurement functions should be obtained from the procuring activity or as directed by the contracting officer.)

2.2 Other publications. The following documents form a part of this standard to the extent specified herein. Unless otherwise indicated, the issue in effect on date of invitation for bids or request for proposal apply.

AEROSPACE INDUSTRIES ASSOCIATION OF AMERICA, INC. (AIA)

NATIONAL AEROSPACE STANDARDS

NAS525	- Rivet-100° Countersunk Head Hi-Shear Close Tolerance Head and Shank.
NAS528	- Collar (High Strength) High-Shear Rivet.
NAS529	- Rivet-Flat Head, Hi-Shear, Close Tolerance Shank.
NAS1080	- Collar, Swage Locking for Pull-Type and Stump Type Lockbolts.
NAS1097	- Rivet, Solid-100° Flush Shear Head, Aluminum Alloy.
NAS1198	- Rivet-Solid Universal Head, A286 Corrosion Resistant Steel.
NAS1199	- Rivet, Solid-100° Flush Head A286 Corrosion Resistant Steel.
NAS1200	- Rivet, Solid, 100° Flush Shear Head A286 Corrosion Resistant Steel and Monel.
NAS1287	- Nut, Extended Washer, Hexagon-Locking, Low Height, C' Bore.
NAS1288	- Nut, Hex and Washer, Self-Aligning, Self-Locking-Shear Pin.
NAS1292 thru NAS1296	- Pin-Threaded Shear 100° CSK Head.
NAS1322 thru NAS1326	- Pin-Threaded Shear Protruding Head.

THIS DOCUMENT PROVIDED BY THE ABBOTT AEROSPACE
Downloaded from http://www.everyspec.com
TECHNICAL LIBRARY
ABBOTTAEROSPACE.COM

AEROSPACE INDUSTRIES ASSOCIATION OF AMERICA, INC. (AIA)

NATIONAL AEROSPACE STANDARDS - Continued

NAS1398	- Rivet-Blind, Protruding Head, Locked Spindle.
NAS1399	- Rivet-Blind, 100° Flush Head, Locked Spindle.
NAS1414 thru NAS1422	- Pin, Swage Locking, Steel, 100° Shear Head, Stump-Type.
NAS1424 thru NAS1432	- Pin, Swage Locking, Steel, Protruding Head, Shear, Stump-Type.
NAS1436 thru NAS1442	- Pin, Swage Locking, Steel, Standard and Oversize, 100° Shear Head, Pull-Type.
NAS1446 thru NAS1452	- Pin, Swage Locking, Steel, Standard and Oversize, Protruding Head, Shear, Pull-Type.
NAS1456 thru NAS1462	- Pin, Swage Locking, Steel, Standard and Oversize, 100° Head (MS24694), Tension, Pull-Type.
NAS1465 thru NAS1472	- Pin, Swage Locking, Steel, Standard and Oversize, Protruding Head, Tension, Pull-Type.
NAS1475 thru NAS1482	- Pin, Swage Locking, Steel, Standard and Oversize, 100° Head (MS20426), Tension, Pull-Type.
NAS1486 thru NAS1492	- Pin, Swage Locking, Steel, 100° Head (MS24694), Tension, Stump-Type.
NAS1496 thru NAS1502	- Pin, Swage Locking, Steel, Protruding Head, Tension, Stump-Type.
NAS1516 thru NAS1522	- Pin, Swage Locking, Aluminum Alloy, 100° Head (MS24694), Tension, Pull-Tupe.
NAS1525 thru NAS1532	- Pin, Swage Locking, Aluminum Alloy, Protruding Head, Tension, Pull-Type.
NAS1535 thru NAS1542	- Pin, Swage Locking, Aluminum Alloy, 100° Head (MS20426), Tension, Pull-Type.

THIS DOCUMENT PROVIDED BY THE ABBOTT AEROSPACE
Downloaded from http://www.everyspec.com
TECHNICAL LIBRARY
ABBOTTAEROSPACE.COM

AEROSPACE INDUSTRIES ASSOCIATION OF AMERICA, INC. (AIA)

NATIONAL AEROSPACE STANDARDS - Continued

NAS1555 thru NAS1562 - Pin, Swage Locking, Aluminum Alloy, Protruding Head, Tension, Stump-Type.

NAS1583 - Pin, 100° CSK Head Hi-Shear Rivet, Close Tolerance, 1200°F.

NAS1584 - Pin, Flat Head Hi-Shear Rivet, Close Tolerance 1200°F.

NAS1585 - Collar Hi-Shear Rivet, 1200°F.

NAS1669 - Fastener-Blind, Internally Threaded, External Sleeve, General Purpose, Protruding Head, Self-Locking.

NAS1670 - Fastener-Blind, Internally Threaded, External Sleeve, General Purpose, Flush Head, Self-Locking.

NAS1671 - Fastener-Blind; Internally Threaded, External Sleeve, High Temperature, Protruding Head Self-Locking.

NAS1672 - Fastener-Blind, Internally Threaded, External Sleeve, High Temperature, Flush Head, Self-Locking.

NAS1673 - Fastener-Blind, Internally Threaded, External Sleeve, Lightweight, Protruding Head, Self-Locking.

NAS1674 - Fastener-Blind, Internally Threaded, External Sleeve, Lightweight, Millable Head, Self-Locking.

NAS1738 - Rivet-Blind, Protruding Head, Mechanically Locked Spindle, Bulbed.

NAS1739 - Rivet-Blind, 100° Flush Head, Mechanically Locked Spindle, Bulbed.

NAS1919 - Rivet, Blind-General Purpose, Bulbed, Protruding Head, Mechanically-Locked-Spindle.

THIS DOCUMENT PROVIDED BY THE ABBOTT AEROSPACE
Downloaded from http://www.everyspec.com
TECHNICAL LIBRARY
ABBOTTAEROSPACE.COM

AEROSPACE INDUSTRIES ASSOCIATION OF AMERICA, INC. (AIA)

NATIONAL AEROSPACE STANDARDS - Continued

NAS1921 - Rivet, Blind-General Purpose, Bulbed, 100° Flush Head, Mechanically-Locked-Spindle.

NAS2005 thru NAS2012 - Bolt-Lock, Tension, Protruding Head, Standard and Oversize, Pull-Type, Titanium Alloy.

NAS2105 thru NAS2112 - Bolt-Lock, Tension, 100° Head (MS24694), Pull-Type, Titanium Alloy.

NAS2115 thru NAS2122 - Bolt-Lock, Tension, 100° Head (MS20426), Standard and Oversize, Pull-Type, Titanium Alloy.

NAS2125 thru NAS2132 - Bolt-Lock, Tension, 100° Crown Head, Standard and Oversize, Pull-Type, Titanium Alloy.

NAS2205 thru NAS2212 - Bolt-Lock, Tension, Protruding Head, Stump-Type, Titanium Alloy.

NAS2306 thru NAS2312 - Bolt-Lock, Tension, 100° Head (MS24694), Stump-Type, Titanium Alloy.

NAS2315 thru NAS2322 - Bolt-Lock, Tension, 100° Head (MS20426), Stump-Type, Titanium Alloy.

NAS2325 thru NAS2332 - Bolt-Lock, Tension, 100° Crown Head, Stump-Type, Titanium Alloy.

NAS2406 thru NAS2412 - Bolt-Lock, Shear, Protruding Head, Standard and Oversize, Pull-Type, Titanium Alloy.

NAS2506 thru NAS2512 - Bolt-Lock, Shear 100° Head, Standard and Oversize, Pull-Type, Titanium Alloy.

NAS2605 thru NAS2612 - Bolt-Lock, Shear, Protruding Head, Stump-Type, Titanium Alloy.

NAS2705 thru NAS2712 - Bolt-Lock, Shear, 100° Head, Stump-Type, Titanium Alloy.

NAS4445 - Nut, Crimp, for Crimplock Fastener System.

NAS4450 - Pin, Crimp, Protruding Shear Head.

THIS DOCUMENT PROVIDED BY THE ABBOTT AEROSPACE
Downloaded from http://www.everyspec.com
TECHNICAL LIBRARY
ABBOTTAEROSPACE.COM

AEROSPACE INDUSTRIES ASSOCIATION OF AMERICA, INC. (AIA)

NATIONAL AEROSPACE STANDARDS - Continued

NAS4452	- Pin, Crimp, 100° Flush Shear Head.
NAS4458	- Pin, Crimp, Protruding Tension Head.
NAS4466	- Pin, Crimp, 100° Crown Shear/Tension Head.
NAS6915 thru NAS6922	- Pin, Swage Locking, Aluminum Alloy, 100° Head (MS20426), Tension, Stump-Type.
NAS6925 thru NAS6932	- Pin, Swage Locking, Steel, 100° Head (MS20426), Tension, Stump-Type.
NAS6935 thru NAS6942	- Pin, Swage Locking, Steel, 100° Crown Head, Tension, Pull-Type.
NAS6946 thru NAS6952	- Pin, Swage Locking, A-286 CRES, 100° Head (MS24694), Tension, Pull-Type.
NAS6955 thru NAS6962	- Pin, Swage Locking, A-286 CRES, 100° Head (MS20426), Tension, Pull-Type.
NAS6965 thru NAS6972	- Pin, Swage Locking, A-286 CRES, Protruding Head, Tension, Pull-Type.
NAS6974 thru NAS6982	- Pin, Swage Locking, A-286 CRES, 100° Shear Head, Stump-Type.
NAS6984 thru NAS6992	- Pin, Swage Locking, A-286 CRES, Protruding Head, Shear, Stump-Type.
NAS7004 thru NAS7012	- Pin, Swage Locking, A-286 CRES, 100° Shear/ Tension Head, Pull-Type.
NAS7014 thru NAS7022	- Pin, Swage Locking, A-286 CRES, Protruding Head, Shear/Tension, Pull-Type.
NAS7024 thru NAS7032	- Pin, Swage Locking, 108 KSI Steel, 100° Shear/Tension Head, Pull-Type.
NAS7034 thru NAS7042	- Pin, Swage Locking, 108 KSI Steel, Protruding Head, Shear/Tension, Pull-Type.

(Applications for copies should be addressed to the Aerospace Inds. Assoc. of America, Inc., 1725 DeSales St., N.W., Washington, DC 20036.)

THIS DOCUMENT PROVIDED BY THE ABBOTT AEROSPACE
Downloaded from http://www.everyspec.com
TECHNICAL LIBRARY
ABBOTTAEROSPACE.COM

SOCIETY OF AUTOMOTIVE ENGINEERS (SAE)

AERONAUTICAL STANDARD

AS125101 thru AS125250 - Rivet-100° Countersunk Head, Mild Steel.

(Application for copies should be addressed to the Society of Automotive Engineers, Inc., 400 Commonwealth Drive, Warrendale, PA 15096.)

3. DEFINITIONS

3.1 Adopted Industry Standards. Any Industry Specification or Standard which is listed in the Department of Defense Index of Specifications and Standards (DODISS).

3.2 Commodity Type Document. A document which lists preferred parts within a Federal Supply Classification class or Item Name. This document is to be used for selecting preferred parts for a new design when the document is invoked as a contractual requirement in conjunction with a parts control requirement.

3.3 End Use Type Document. A document that lists preferred documents and establishes parts requirements which are contractually binding for the design and construction/manufacture of a weapon system or an established equipment category such as MIL-STD-1515.

3.4 Military Parts Control Advisory Group (MPCAG). A Department of Defense organization which provides advice to the Military Departments and military contractors on the selection of parts in assigned commodity classes, and collects data on nonstandard parts for developing or updating military specifications and standards.

3.5 Definitions of approved item names used in this standard are as follows:

a. Cap, Rivet. A closure designed to fit over the end of a split or tubular rivet shank and into which the shank end is crimped in assembly. It provides greater strength and gives the appearance of a solid rivet at the clinched end. The closure may have a knurled shank and a head with its bottom recessed to fit over a hollow rivet head. It is designed to be pressed or driven through the head of a hollow rivet when a closed assembly is required.

b. Collar, Grooved, Pin-Rivet. A sleeve of soft metal for swaging into the locking groove(s) of a PIN-RIVET, GROOVED or a PIN-RIVET, DOWEL thus forming a head.

THIS DOCUMENT PROVIDED BY THE ABBOTT AEROSPACE
Downloaded from http://www.everyspec.com
TECHNICAL LIBRARY
ABBOTTAEROSPACE.COM

c. Collar, Pin-Rivet, Threaded. An internally threaded sleeve, designed to mate with a PIN-RIVET, THREADED. It may include an external wrenching facility which breaks off at a predetermined torque.

d. Pin-Rivet, Grooved. A metallic item, headed at one end with a cylindrically shaped shank having a circumferential groove near the opposite end, or a series of grooves along its length. The grooves are used to engage a collar or sleeve which is installed by means of a rivet gun or riveting machine. The grooved shank may extend beyond the collar or sleeve, performing the same holding action as the clinched portion of a conventional rivet.

e. Pin-Rivet, Threaded. A metallic item, cylindrically shaped, headed at one end and threaded at the other end. The threads are used to engage a threaded collar or sleeve. The bottom of the shank may have a hexagon socket which accommodates an installation tool. The shank may extend beyond the collar or sleeve performing the same holding action as the clinched portion of a conventional rivet.

f. Rivet, Blind. A headed fastening device with the shank designed to be expanded by means of a separate or integral stem or mandrel, or by means of an explosive charge in the shank detonated by heat applied to the head. It is designed to be installed and expanded from one side only.

g. Rivet, Solid. A headed fastening device having a smooth solid shank designed to have the shank end clinched after insertion.

h. Rivet, Split. A headed fastening device having a smooth shank which is split, slotted or forked and designed to be spread or crimped back after insertion.

i. Rivet, Tubular. A headed fastening device having smooth shank which is hollow or having a cavity at its end and designed to have the shank end clinched after insertion.

4. GENERAL STATEMENTS

4.1 Selection procedure.

4.1.1 Document selection. The applicable section shall be selected after reviewing the table of contents.

4.1.2 Part number selection (preliminary). A preliminary selection of the applicable part number shall be made after reviewing the nominal parameters (sizes, materials, shear and tensile strength) listed in the sections.

THIS DOCUMENT PROVIDED BY THE ABBOTT AEROSPACE
TECHNICAL LIBRARY
ABBOTTAEROSPACE.COM
Downloaded from http://www.everyspec.com

4.1.3 Part number selection (final). A final selection of the applicable part number shall be made after reviewing the detailed requirements specified in the referenced rivet and rivet type fastener documents for suitability in the particular military equipment being designed (considering the application and environmental conditions).

5. DETAILED REQUIREMENTS

5.1 The detailed requirements for preferred rivets and rivet type fasteners are contained in the applicable rivet and rivet type fastener document and associated procurement specification. If there is disagreement between the nominal parameters listed in this standard and the parameters specified in the applicable rivet and rivet type fastener document or associated procurement specification, the parameters specified in the applicable rivet and rivet type fastener document or associated procurement specification shall prevail.

6. NOTES

6.1 Dimensions. Dimensions shown in the sections contained herein are in inches.

THIS DOCUMENT PROVIDED BY THE ABBOTT AEROSPACE
Downloaded from http://www.everyspec.com
TECHNICAL LIBRARY
ABBOTTAEROSPACE.COM

MIL-STD-1759
10 JULY 1979

Custodians:
Army - AR
Navy -
Air Force - 11

Review activities:
Army - EA, ER, MI
Navy - SH
Air Force - 99
DLA - IS
NS

User activities:
Army - GL, ME
Navy - OS, YD

Preparing activity:
Air Force - 11

Agent:
DLA - IS

(Project 5320-0314)

THIS DOCUMENT PROVIDED BY THE ABBOTT AEROSPACE
Downloaded from http://www.everyspec.com
TECHNICAL LIBRARY
ABBOTTAEROSPACE.COM

SECTION 101

CAPS, RIVET

APPLICABLE DOCUMENT: MS51924

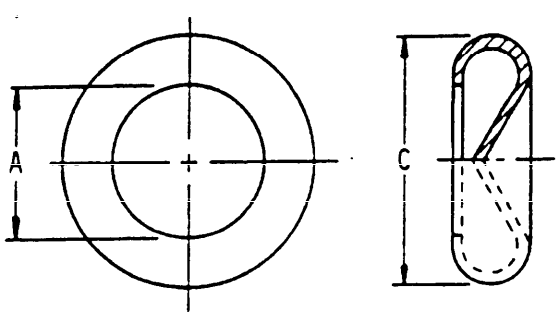

TYPE I
(FOR USE WITH SPLIT RIVETS)

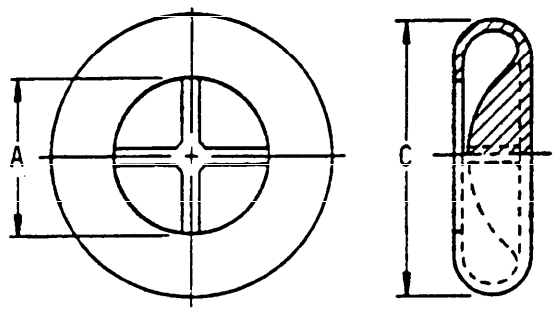

TYPE II
(FOR USE WITH TUBULAR RIVETS)

Material	Protective finish	Shear strength (psi) min
Carbon steel C1006 thru C1023	Cadmium plate	32,000
Brass composition 260 or 270 quarter hard	None or oxide or black finish	35,000

TABLE I. Cap configuration dash numbers.

Type	Rivet size	A Rivet shank diameter	C Outside diameters	MS51924 Dash no.		
				Steel	Brass	Brass (coated)
I	.094	.092	.297	S1-6	B1-6	K1-6
I	.125	.125	.328	S1-8	B1-8	K1-8
I	.141	.152	.375	S1-9	B1-9	K1-9
I	.188	.190	.375	S1-12	B1-12	K1-12
II	.125	.123	.266	S2-8	B2-8	K2-8
II	.141	.146	.344	S2-9	B2-9	K2-9
II	.188	.188	.438	S2-12	B2-12	K2-12

THIS DOCUMENT PROVIDED BY THE ABBOTT AEROSPACE
TECHNICAL LIBRARY
ABBOTTAEROSPACE.COM
Downloaded from http://www.everyspec.com

THIS DOCUMENT PROVIDED BY THE ABBOTT AEROSPACE
Downloaded from http://www.everyspec.com
TECHNICAL LIBRARY
ABBOTTAEROSPACE.COM

SECTION 202

COLLAR (HIGH STRENGTH) HIGH-SHEAR RIVET

APPLICABLE DOCUMENT: NAS528

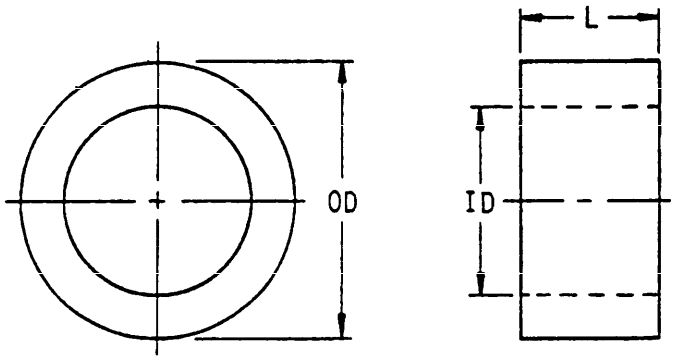

Material	Protective finish	Shear strength (psi) min
Aluminum alloy 2024-T4	Anodize	Not specified

TABLE I. NAS 528 Dash numbers.

Size	ID	OD	L	Dash no.
.125	.128 .124	.190 .180	.167 .157	-A4
.156	.160 .156	.235 .225	.188 .178	-A5
.188	.1930 .1895	.284 .274	.210 .200	-A6
.250	.2530 .2495	.371 .361	.250 .240	-A8
.312	.3160 .3120	.461 .451	.291 .281	-A10
.375	.3785 .3745	.550 .540	.333 .323	-A12
.500	.505 .500	.734 .724	.415 .405	-A16
.625	.630 .625	.912 .902	.498 .488	-A20

THIS DOCUMENT PROVIDED BY THE ABBOTT AEROSPACE
TECHNICAL LIBRARY
ABBOTTAEROSPACE.COM
Downloaded from http://www.everyspec.com

THIS DOCUMENT PROVIDED BY THE ABBOTT AEROSPACE
Downloaded from http://www.everyspec.com
TECHNICAL LIBRARY
ABBOTTAEROSPACE.COM

SECTION 201

COLLAR
HI-SHEAR RIVET, 1200°F

APPLICABLE DOCUMENT: NAS1585

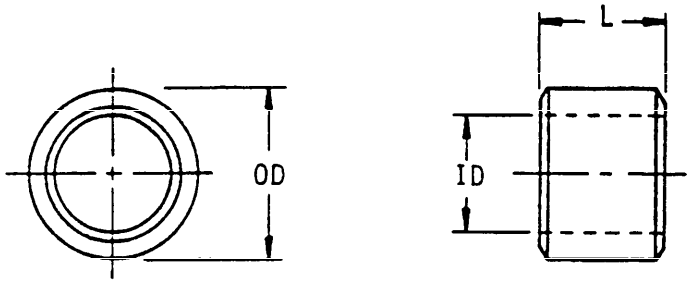

Material	Protective finish	Shear strength (psi) min
Inconel per AMS 5665	Not specified	Not specified

TABLE I. NAS1585 Dash numbers.

Size	ID	OD	L	Dash no.
.125	.1280 .1245	.181 .171	.167 .157	-4
.156	.1600 .1565	.225 .215	.188 .178	-5
.188	.1930 .1895	.270 .260	.225 .215	-6
.250	.2530 .2495	.355 .345	.270 .260	-8
.312	.3160 .3120	.437 .427	.316 .306	-10
.375	.3790 .3745	.523 .513	.365 .355	-12

THIS DOCUMENT PROVIDED BY THE ABBOTT AEROSPACE
TECHNICAL LIBRARY
ABBOTTAEROSPACE.COM
Downloaded from http://www.everyspec.com

THIS DOCUMENT PROVIDED BY ABBOTT AEROSPACE
Downloaded from http://www.everyspec.com
TECHNICAL LIBRARY
ABBOTTAEROSPACE.COM

SECTION 203

COLLAR, SWAGE LOCKING FOR PULL-TYPE AND STUMP-TYPE LOCKBOLTS

APPLICABLE DOCUMENTS: NAS1080

Material		Protective finish	Code
Aluminum alloy	2024 T4	Anodize	"-", "C", "G", "K", "P"
	2219 T6		"AG", "AP", "AT"
	6061 T7	None	"D"
Carbon steel	C1006 C1008 C1213 C1215 B1113	Cadmium plate	"E", "R"
CRES A-286		Passivate	"UG", "UK"
Nickel copper alloy (Monel)		None	"MG", "MK"

THIS DOCUMENT PROVIDED BY THE ABBOTT AEROSPACE
Downloaded from http://www.everyspec.com
TECHNICAL LIBRARY
ABBOTTAEROSPACE.COM

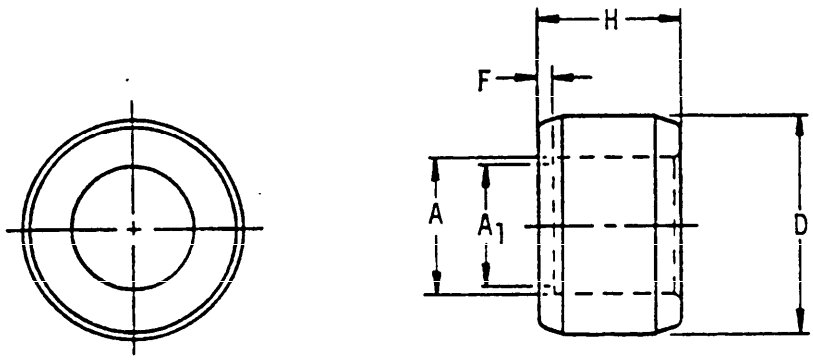

FIGURE 1. Shear type collars - symmetrically double ended.

TABLE I. Collar configuration dash numbers.

Dimensions - shear type - figure 1										
Diameters					Lengths			NAS1080 Dash number		
A		A_1	D		F	H				
Max	Min	Min	Max	Min	Max	Max	Min	Aluminum	Steel	Monel
.128	.124	.122	.201	.197	.016	.188	.171	AG04	UG04	MG04
						.168	.157	C04	E04	-
.134	.129	.127	.206	.202	.016	.210	.197	K04	-	-
.130	.126	.121	.204	.200				-	UK04	MK04
.173	.168	.165	.260	.256	.016	.208	.197	AG05	UG05	MG05
.173	.168	.165	.260	.256	.016	.234	.219	K05	-	-
.161	.157	.152	.252	.248				-	UK05	MK05
.192	.187	.183	.303	.299	.016	.240	.225	AG06	-	-
								G06	-	-
.208	.203	.200	.310	.306	.016	.253	.238	K06	-	-
.194	.190	.184	.302	.298				-	UK06	MK06
.253	.248	.245	.396	.392	.016	.298	.283	AG08	-	-
								G08	-	-
.271	.266	.263	.410	.406	.016			K08	-	-
.254	.250	.244	.399	.394				-	UK08	MK08
.315	.310	.307	.497	.492	.031	.317	.302	AG10	-	-
								G10	-	-
.336	.330	.327	.511	.506	.031	.334	.319	K10	-	-
.318	.313	.306	.500	.494				-	UK10	MK10
.378	.373	.370	.601	.596	.031	.396	.381	AG12	-	-
								G12	-	-
.399	.393	.390	.612	.607	.031	.370	.355	K12	-	-
.380	.375	.368	.600	.594				-	UK12	MK12

THIS DOCUMENT PROVIDED BY THE ABBOTT AEROSPACE
Downloaded from http://www.everyspec.com
TECHNICAL LIBRARY
ABBOTTAEROSPACE.COM

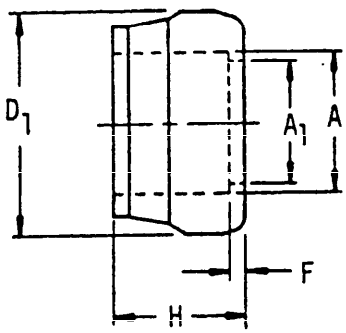

FIGURE 2. Shear type collars NAS1080C06 and NAS1080C08.

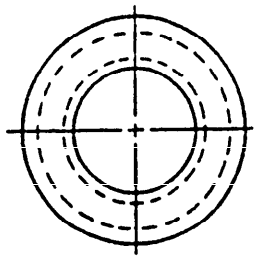

TOP VIEW OF FIGURES 2, 3 & 4

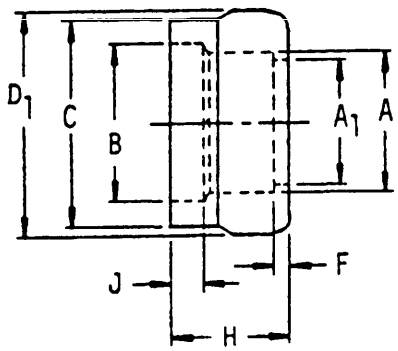

FIGURE 3. Shear type collars NAS1080C10 and NAS1080C12.

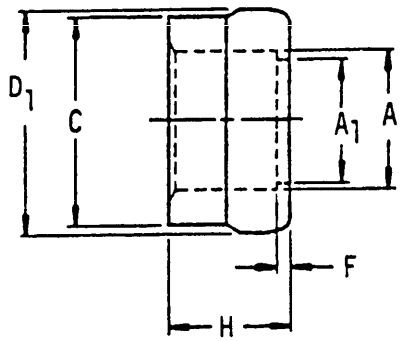

FIGURE 4. Shear type collars NAS1080E06 thru NAS1080E12.

TABLE II. Collar configuration dash numbers.

Dimensions - shear type - figures 2, 3 & 4													NAS1080 Dash number
Diameters								Lengths					
A		A_1	B		C		D_1	F	H		J		
Max	Min	Min	Max	Min	Max	Min	Min	Max	Max	Min	Max	Min	
.191	.187	.183	–	–	–	–	.308	.016	.205	.185	–	–	C06
.1935	.1885	.185	–	–	.294	.288					–		E06
.252	.248	.243	–	–	–	–	.409	.016	.236	.220	–	–	C08
			–	–	.394	.388	.401		.250	.230	–		E08
.309	.305	.301	.356	.349	.497	.492	.506	.031	.270	.250	.099	.091	C10
			–	–	.495	.489	.499				–	–	E10
.377	.373	.367	.416	.408	.596	.589	.604	.031	.322	.298	.092	.084	C12
			–	–			.600		.323	.303	–	–	E12

THIS DOCUMENT PROVIDED BY THE ABBOTT AEROSPACE
Downloaded from http://www.everyspec.com
TECHNICAL LIBRARY
ABBOTTAEROSPACE.COM

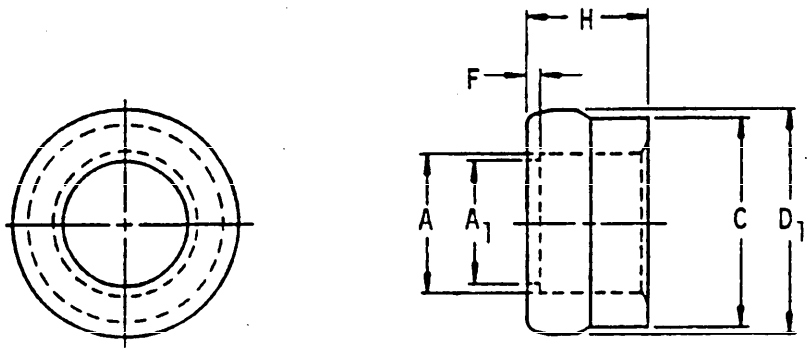

FIGURE 5. Tension type collars for 4-locking-groove type lockbolts.

TABLE III. Collar configuration dash numbers.

Dimensions - tension type - figure 5									
Diameters						Lengths			NAS1080 Dash numbers.
A		A_1	C		D_1	F	H		
Max	Min	Min	Max	Min	Min	Max	Max	Min	
.169	.164	.163	.266	.256	.264	.016	.200	.170	-05
									AT05
									D05
									R05
.193	.187	.184	.310	.304	.311	.016	.263	.233	-06
									AT06
.199	.193	.190							D06
.193	.187	.180				.031	.257	.227	R06
.254	.246	.244	.409	.402	.412	.016	.335	.305	-08
									AT08
.265	.259	.256							D08
.265	.259	.241				.046			R08
.312	.304	.301	.507	.499	.512	.031	.380	.350	-10
									AT10
									D10
.378	.371	.367	.609	.600	.612	.031	.509	.479	-12
									AT12
							.460	.430	D12

THIS DOCUMENT PROVIDED BY THE ABBOTT AEROSPACE
TECHNICAL LIBRARY
ABBOTTAEROSPACE.COM
Downloaded from http://www.everyspec.com

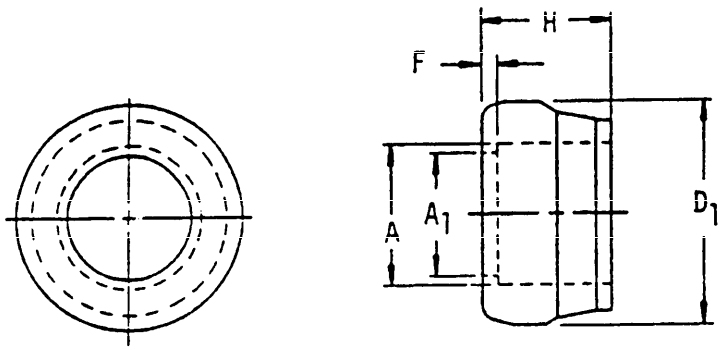

FIGURE 6. Tension type collars for 5-locking-groove type lockbolts.

TABLE IV. Collar configuration dash numbers.

Dimensions - Tension type - Figure 6							
Diameters				Lengths			NAS1080 Dash number
A		A_1	D_1	F	H		
Max	Min	Min	Min	Max	Max	Min	
.316	.310	.301	.510	.031	.420	.390	P10 AP10 R10
.380	.372	.367	.618	.031	.540	.510	P12 AP12 R12

THIS DOCUMENT PROVIDED BY THE ABBOTT AEROSPACE
TECHNICAL LIBRARY
ABBOTTAEROSPACE.COM
Downloaded from http://www.everyspec.com

THIS DOCUMENT PROVIDED BY THE ABBOTT AEROSPACE
TECHNICAL LIBRARY
ABBOTTAEROSPACE.COM
Downloaded from http://www.everyspec.com

SECTION 204

COLLAR, SWAGE-LOCKING; REGULAR HEIGHT, FLANGED AND LOW PROFILE, ALUMINUM ALLOY, CORROSION RESISTANT STEEL, CARBON STEEL AND ALLOY STEEL

APPLICABLE DOCUMENT: MIL-P-23469/1

Material	Protective finish	Tensile strength (psi) min	Class
Aluminum alloy 6061	Not specified	19,200	1
CRES #10 AISI 305 or AISI 430F	Cadmium plate	52,600	2
Carbon steel C1006 thru C1008	Zinc coat	59,700	3
Alloy steel A242	Zinc coat	Not specified	4

THIS DOCUMENT PROVIDED BY THE ABBOTT AEROSPACE
Downloaded from http://www.everyspec.com
TECHNICAL LIBRARY
ABBOTTAEROSPACE.COM

TYPE I - REGULAR HEIGHT COLLARS FOR USE
WITH PINS HAVING SIX LOCKING GROOVES

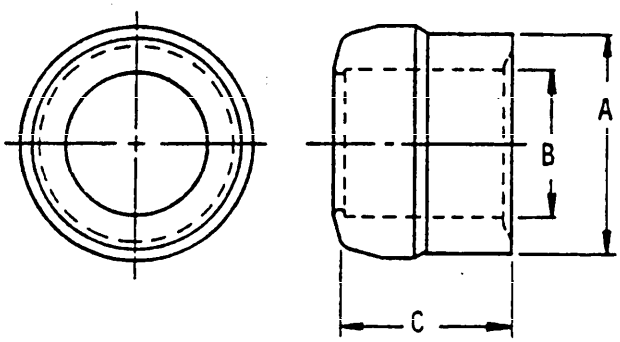

CLASS 1 AND 3 MATERIAL

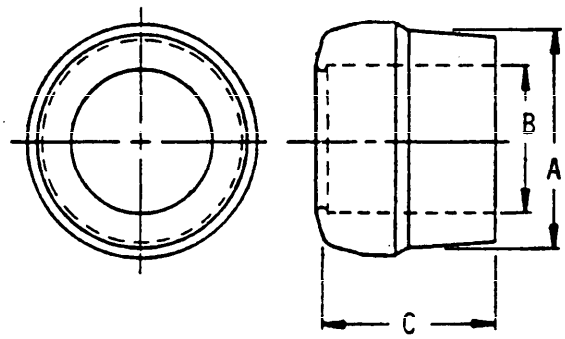

CLASS 2 MATERIAL

TABLE I. Collar configuration dash numbers.

Size	A Dia	B Dia	C	M23469/1 Dash no.		
				Class 1	Class 2	Class 3
				Al	Cres	Carbon steel
.188	.309 .306	.195 .197	.237 .247	-10106	-	-
	.305 .301	.1875 .1895	.240 .250	-	-20106	-
	.309 .306	.1895 .1925	.222 .232	-	-	-30106
.250	.406 .403	.261 .263	.306 .318	-10108	-	-
	.393 .389	.250 .252	.295 .305	-	-20108	-
	.406 .403	.261 .263	.294 .304	-	-	-30108
.312	.505 .501	.306 .308	.354 .364	-10110	-	-
	.486 .482	.308 .310	.360 .370	-	-20110	-
	.492 .487	.306 .310	.354 .364	-	-	-30110
.375	.608 .600	.3735 .3765	.431 .441	-10112	-	-
	.588 .584	.377 .382	.390 .400	-	-20112	-
	.598 .591	.377 .382	.433 .443	-	-	-30112

THIS DOCUMENT PROVIDED BY THE ABBOTT AEROSPACE
Downloaded from http://www.everyspec.com
TECHNICAL LIBRARY
ABBOTTAEROSPACE.COM

TYPE I - REGULAR HEIGHT COLLARS FOR USE WITH PINS HAVING MULTIPLE LOCKING GROOVES

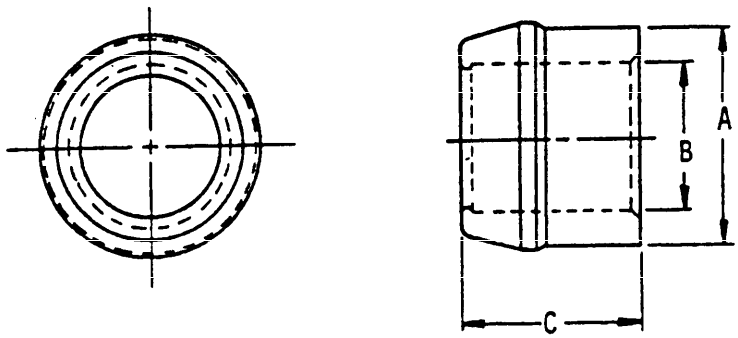

CLASS 1, 2 & 3 MATERIAL

TABLE I. Collar configuration dash numbers.

Size	A Dia	B Dia	C	M23469/1 Dash no. Class 1 A1	Class 2 Cres	Class 3 Carbon steel
.500	.795 .785	.520 .527	.615 .635	-10116	-	-
	.785 .775	.527 .534	.615 .635	-	-20116	-
	.795 .785	.520 .527	.615 .635	-	-	-30116
.625	.979 .974	.651 .657	.798 .778	-10120	-	-
	.979 .974	.651 .657	.798 .778	-	-20120	-
	.979 .974	.651 .657	.870 .850	-	-	-30120
.750	1.176 1.170	.781 .787	.935 .955	-10124	-	-
	1.176 1.170	.781 .787	.935 .955	-	-20124	-
	1.176 1.170	.780 .787	.935 .955	-	-	-30124
.875	1.356 1.349	.923 .930	1.088 1.108	-10128	-	-
	1.371 1.364	.923 .930	1.088 1.108	-	-20128	-
	1.371 1.362	.910 .918	1.090 1.112	-	-	-30128
1.000	1.551 1.543	1.032 1.040	1.240 1.260	-10132	-	-
	1.564 1.556	1.034 1.042	1.240 1.260	-	-20132	-
	1.564 1.556	1.039 1.047	1.245 1.272	-	-	-30132

THIS DOCUMENT PROVIDED BY THE ABBOTT AEROSPACE
Downloaded from http://www.everyspec.com
TECHNICAL LIBRARY
ABBOTTAEROSPACE.COM

TYPE II - FLANGED COLLARS FOR USE WITH PINS
HAVING SIX LOCKING GROOVES

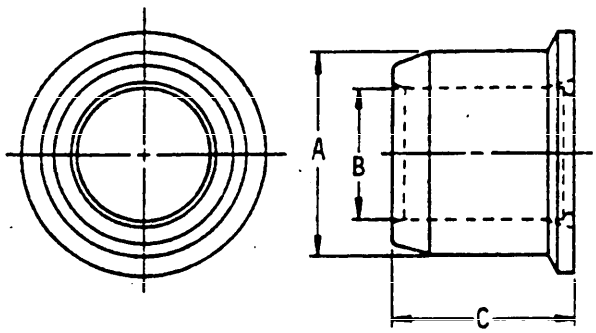

CLASS 1 AND 3 MATERIAL

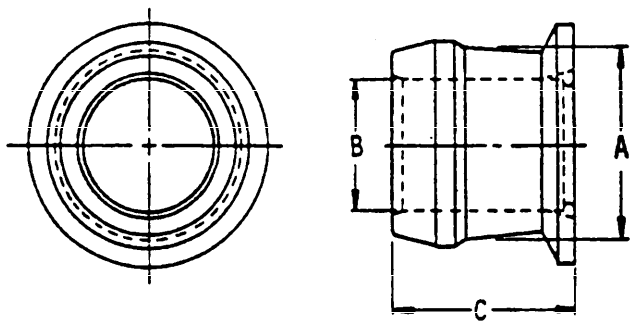

CLASS 2 MATERIAL

TABLE I. Collar configuration dash numbers.

Size	A Dia	B Dia	C	M23469/1 Dash no.		
				Class 1	Class 2	Class 3
				Al	Cres	Carbon steel
.188	.309 .306	.1895 .1925	.260 .270	-10206	-	-
	.305 .301	.1875 .1895	.287 .297	-	-20206	-
	.311 .306	.1895 .1925	.260 .270	-	-	-30206
.250	.406 .403	.261 .263	.359 .369	-10208	-	-
	.393 .389	.250 .252	.357 .367	-	-20208	-
	.406 .403	.261 .263	.359 .369	-	-	-30208
.312	.505 .501	.308 .310	.404 .414	-10210	-	-
	.485 .483	.308 .310	.438 .448	-	-20210	-
	.505 .501	.308 .310	.404 .414	-	-	-30210
.375	.608 .600	.3735 .3765	.512 .522	-10212	-	-
	.588 .584	.377 .382	.484 .494	-	-20212	-
	.608 .600	.3735 .3765	.512 .522	-	-	-30212

THIS DOCUMENT PROVIDED BY THE ABBOTT AEROSPACE
Downloaded from http://www.everyspec.com
TECHNICAL LIBRARY
ABBOTTAEROSPACE.COM

TYPE II - FLANGED COLLARS FOR USE WITH PINS HAVING MULTIPLE LOCKING GROOVES

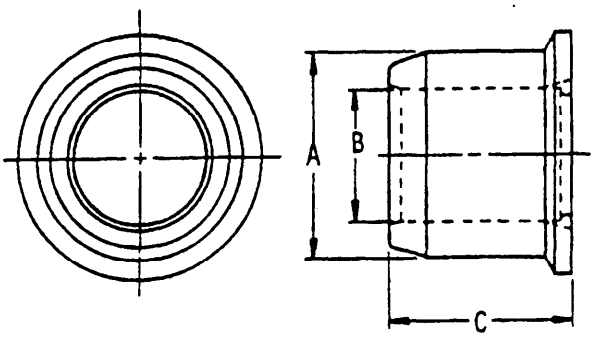

CLASS 1, 2, 3 & 4 MATERIAL
FOR .500, .625 & .750 SIZE

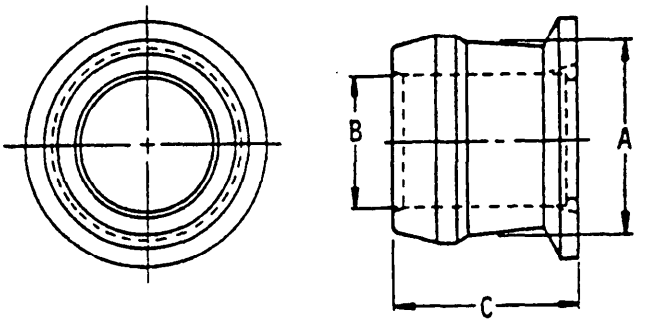

CLASS 1, 2, 3 & 4 MATERIAL
FOR .875 & 1.000 SIZE

TABLE I. Collar configuration dash numbers.

Size	A Dia	B Dia	C	M23469/1 Dash no.			
				Class 1	Class 2	Class 3	Class 4
				Al	Cres	Carbon steel	Alloy steel
.500	.805 .795	.520 .527	.720 .740	-10216	-	-	-
	.805 .795	.520 .527	.720 .740	-	-20216	-	-
	.805 .795	.520 .527	.720 .740	-	-	-30216	-
	.805 .795	.520 .527	.720 .740	-	-	-	-40216
.625	.993 .983	.651 .657	.863 .883	-10220	-	-	-
	.993 .983	.651 .657	.863 .883	-	-20220	-	-
	.993 .983	.651 .657	.935 .955	-	-	-30220	-
	.993 .983	.651 .657	.935 .955	-	-	-	-40220
.750	1.190 1.180	.781 .787	1.122 1.142	-10224	-	-	-
	1.190 1.180	.781 .787	1.122 1.142	-	-20224	-	-
	1.190 1.180	.781 .787	1.122 1.142	-	-	-30224	-
	1.190 1.180	.781 .787	1.122 1.142	-	-	-	-40224
.875	1.356 1.349	.923 .930	1.305 1.325	-10228	-	-	-
	1.371 1.364	.923 .930	1.305 1.325	-	-20228	-	-
	1.371 1.364	.923 .930	1.305 1.325	-	-	-30228	-
	1.371 1.364	.923 .930	1.305 1.325	-	-	-	-40228
1.000	1.551 1.543	1.032 1.040	1.490 1.510	-10232	-	-	-
	1.564 1.556	1.034 1.042	1.490 1.510	-	-20232	-	-
	1.564 1.556	1.034 1.042	1.490 1.510	-	-	-30232	-
	1.564 1.556	1.034 1.042	1.490 1.510	-	-	-	-40232

THIS DOCUMENT PROVIDED BY THE ABBOTT AEROSPACE
TECHNICAL LIBRARY
ABBOTTAEROSPACE.COM
Downloaded from http://www.everyspec.com

TYPE III - LOW PROFILE COLLARS FOR USE WITH
PINS HAVING SIX LOCKING GROOVES

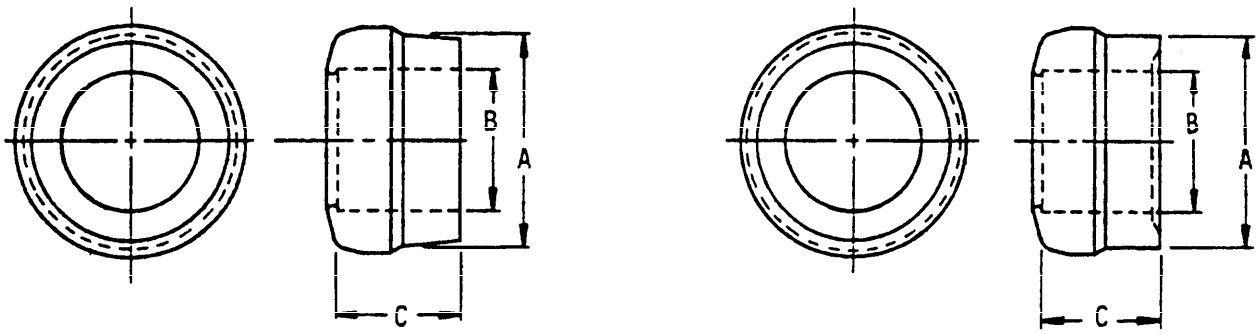

CLASS 1 & 3 MATERIAL

CLASS 2 MATERIAL

TABLE I. Collar configuration dash numbers.

Size	A Dia	B Dia	C	M23469/1 Dash no.		
				Class 1	Class 2	Class 3
				Al	Cres	Carbon steel
.188	.309 .306	.1895 .1925	.142 .152	-10306	-	-
	.309 .306	.1895 .1925	.142 .152	-	-20306	-
	.309 .306	.1895 .1925	.142 .152	-	-	-30306
.250	.406 .403	.261 .263	.182 .192	-10308	-	-
	.393 .389	.250 .252	.182 .192	-	-20308	-
	.406 .403	.261 .263	.182 .192	-	-	-30308
.312	.505 .501	.306 .308	.235 .245	-10310	-	-
	.489 .483	.308 .310	.235 .245	-	-20310	-
	.492 .487	.306 .310	.235 .245	-	-	-30310
.375	.608 .600	.3735 .3765	.283 .293	-10312	-	-
	.588 .584	.377 .382	.283 .293	-	-20312	-
	.598 .591	.377 .382	.283 .293	-	-	-30312

THIS DOCUMENT PROVIDED BY THE ABBOTT AEROSPACE
Downloaded from http://www.everyspec.com
TECHNICAL LIBRARY
ABBOTTAEROSPACE.COM

TYPE III - LOW PROFILE COLLARS FOR USE WITH PINS HAVING MULTIPLE LOCKING GROOVES

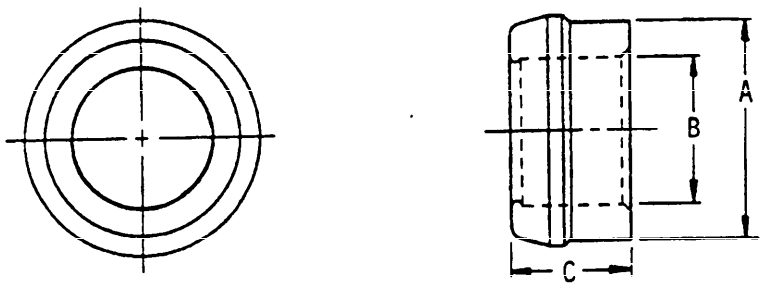

CLASS 1, 2 & 3 MATERIAL

TABLE I. Collar configuration dash numbers.

Size	A Max	B Dia	C	M23469/1 Dash no.		
				Class 1	Class 2	Class 3
				Al	Cres	Carbon steel
.500	.795 .785	.520 .527	.475 .495	-10316	-	-
	.785 .775	.527 .534	.475 .495	-	-20316	-
	.785 .775	.527 .534	.475 .495	-	-	-30316
.625	.979 .974	.651 .657	.603 .623	-10320	-	-
	.979 .974	.651 .657	.603 .623	-	-20320	-
	.979 .974	.651 .657	.675 .695	-	-	-30320
.750	1.176 1.170	.781 .787	.720 .740	-10324	-	-
	1.176 1.170	.781 .787	.720 .740	-	-20324	-
	1.176 1.170	.781 .787	.720 .740	-	-	-30324
.875	1.356 1.349	.923 .930	.838 .858	-10328	-	-
	1.371 1.364	.923 .930	.838 .858	-	-20328	-
	1.371 1.364	.923 .930	.838 .858	-	-	-30328
1.000	1.551 1.543	1.032 1.040	.955 .975	-10332	-	-
	1.564 1.556	1.034 1.042	.955 .975	-	-20332	-
	1.564 1.556	1.034 1.042	.955 .975	-	-	-30332

THIS DOCUMENT PROVIDED BY THE ABBOTT AEROSPACE
TECHNICAL LIBRARY
ABBOTTAEROSPACE.COM
Downloaded from http://www.everyspec.com

TYPE IV - REGULAR HEIGHT DOUBLE END COLLARS FOR USE WITH PINS HAVING MULTIPLE LOCKING GROOVES

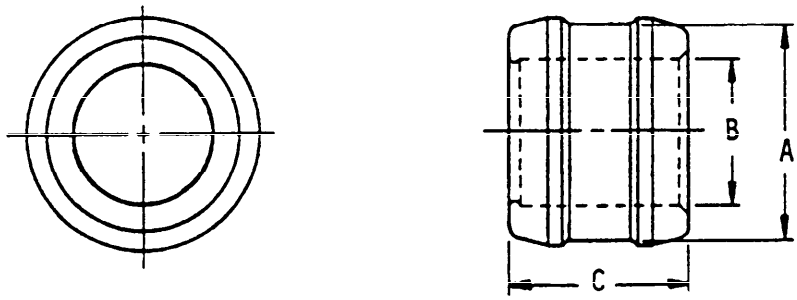

CLASS 1, 2 & 4 MATERIAL

TABLE I. Collar configuration dash numbers.

Size	A Dia	B Dia	C	M23469/1 Dash no. Class 1 Al	Class 2 Cres	Class 3 Carbon steel
.500	.775 .765	.520 .527	.615 .635	-10416	-	-
	.785 .775	.520 .527	.615 .635	-	-20416	-
	.785 .775	.520 .527	.615 .635	-	-	-40416
.625	.956 .950	.652 .657	.778 .798	-10420	-	-
	.966 .961	.652 .657	.778 .798	-	-20420	-
	.966 .961	.652 .657	.850 .870	-	-	-40420
.750	1.146 1.140	.780 .786	.935 .955	-10424	-	-
	1.159 1.153	.780 .786	.935 .955	-	-20424	-
	1.159 1.153	.780 .786	.935 .955	-	-	-40424
.875	1.341 1.338	.923 .927	1.093 1.103	-10428	-	-
	1.351 1.348	.923 .927	1.093 1.103	-	-20428	-
	1.351 1.348	.923 .927	1.093 1.103	-	-	-40428
1.000	1.533 1.530	1.034 1.037	1.245 1.255	-10432	-	-
	1.543 1.540	1.034 1.037	1.245 1.255	-	-20432	-
	1.543 1.548	1.034 1.037	1.245 1.255	-	-	-40432

THIS DOCUMENT PROVIDED BY THE ABBOTT AEROSPACE
Downloaded from http://www.everyspec.com
TECHNICAL LIBRARY
ABBOTTAEROSPACE.COM

TYPE V - LOW PROFILE DOUBLE END COLLARS FOR USE WITH PINS HAVING MULTIPLE LOCKING GROOVES

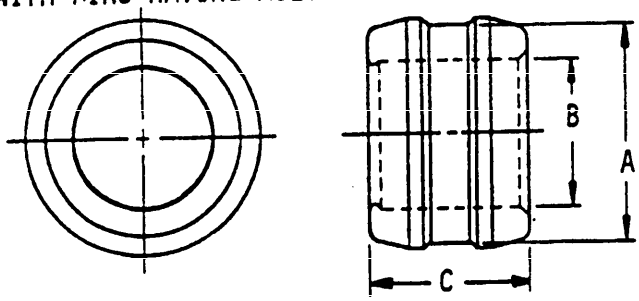

CLASS 1, 2 & 4 MATERIAL

TABLE I. Collar configuration dash numbers.

Size	A Dia	B Dia	C	M23469/1 Dash no. Class 1 Al	Class 2 Cres	Class 3 Alloy steel
.500	.775 .765	.520 .527	.480 .490	-10516	-	-
	.785 .775	.520 .527	.480 .490	-	-20516	-
	.785 .775	.520 .527	.480 .490	-	-	-40516
.625	.956 .950	.652 .657	.608 .618	-10520	-	-
	.966 .961	.652 .657	.608 .618	-	-20520	-
	.966 .961	.652 .657	.680 .690	-	-	-40520
.750	1.146 1.140	.780 .786	.725 .735	-10524	-	-
	1.159 1.153	.780 .786	.725 .735	-	-20524	-
	1.159 1.153	.780 .786	.725 .735	-	-	-40524
.875	1.341 1.338	.923 .927	.843 .853	-10528	-	-
	1.351 1.348	.923 .927	.843 .853	-	-20528	-
	1.351 1.348	.923 .927	.843 .853	-	-	-40528
1.000	1.533 1.530	1.034 1.037	.960 .970	-10532	-	-
	1.543 1.540	1.034 1.037	.960 .970	-	-20532	-
	1.543 1.540	1.034 1.037	.960 .970	-	-	-40532

THIS DOCUMENT PROVIDED BY THE ABBOTT AEROSPACE
TECHNICAL LIBRARY
ABBOTTAEROSPACE.COM
Downloaded from http://www.everyspec.com

THIS DOCUMENT PROVIDED BY THE ABBOTT AEROSPACE
Downloaded from http://www.everyspec.com
TECHNICAL LIBRARY
ABBOTTAEROSPACE.COM

SECTION 301

NUT, CRIMP, FOR CRIMPLOCK FASTENER SYSTEM

APPLICABLE DOCUMENT: NAS4445

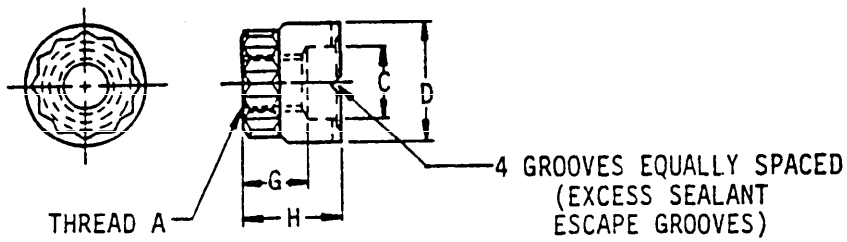

Material	Protective finish	Tensile strength (psi) min
Alloy steel AISI 4130 or 8740	Cadmium plate	93,700
Cres A-286	Passivate or cadmium plate	93,700
Aluminum alloy 2024-H13	Anodize	70,500

TABLE I. NAS4445 Dash numbers.

A Thread	C Dia		D Dia	G	H	Dash no.
	Al	Cres and alloy steel				
.1640-32 UNJC-3B	.167 .171	.167 .171	.274 .268	.135 .145	.247 .262	-05
.1900-32 UNJF-3B	.193 .197	.208 .213	.320 .312	.160 .170	.273 .288	-06
.2500-28 UNJF-3B	.254 .258	.269 .274	.417 .409	.210 .220	.335 .350	-08
.3125-24 UNJF-3B	.318 .322	.333 .338	.523 .516	.261 .271	.398 .413	-10
.3750-24 UNJF-3B	.381 .385	.396 .401	.627 .620	.313 .323	.458 .473	-12

NOTE: This part intended for use with NAS4450, NAS4452, NAS4458 and NAS4466 pins.

THIS DOCUMENT PROVIDED BY THE ABBOTT AEROSPACE
TECHNICAL LIBRARY
ABBOTTAEROSPACE.COM
Downloaded from http://www.everyspec.com

THIS DOCUMENT PROVIDED BY ABBOTT AEROSPACE
Downloaded from http://www.everyspec.com
TECHNICAL LIBRARY
ABBOTTAEROSPACE.COM

SECTION 302

NUT, EXTENDED WASHER, HEXAGON-SELF-LOCKING, LOW HEIGHT, C'BORE

APPLICABLE DOCUMENT: NAS1287

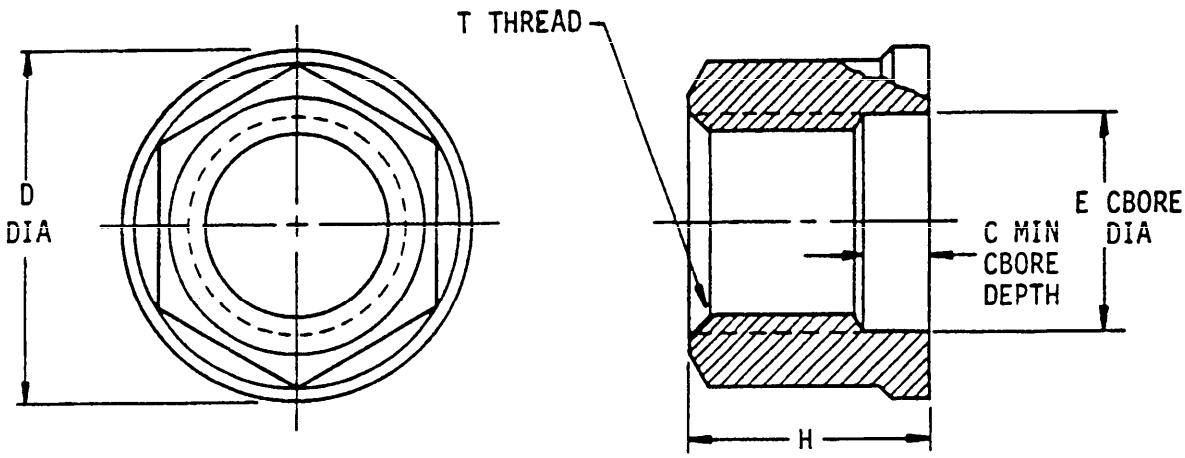

Material	Protective finish	Shear strength (psi) min
Alloy steel AMS 6304	Nickel-zinc alloy plating and hydrogen embrittlement	Not specified
Heat resistant nickel base alloy per AMS 5756; M252	Silver plate	Not specified

TABLE I. NAS1287 Dash numbers.

T Thread	C Min	D Dia max	E Cbore dia min	H Max	Dash no.	
					1400°F	800°F
.1640-32 UNJC-3B	.090	.284	.168	.220	C08	08
.1900-32 UNJF-3B		.322	.194	.240	C3	3
.2500-28 UNJF-3B		.416	.254	.280	C4	4
.3125-24 UNJF-3B		.512	.317	.320	C5	5
.3750-24 UNJF-3B		.605	.379	.360	C6	6

THIS DOCUMENT PROVIDED BY THE ABBOTT AEROSPACE
Downloaded from http://www.everyspec.com
TECHNICAL LIBRARY
ABBOTTAEROSPACE.COM

THIS DOCUMENT PROVIDED BY GHT, ABBOTT AEROSPACE
Downloaded from http://www.everyspec.com
TECHNICAL LIBRARY
ABBOTTAEROSPACE.COM

SECTION 303

NUT, HEX AND WASHER, SELF ALIGNING, SELF-LOCKING - SHEAR PIN

APPLICABLE DOCUMENT: NAS1288

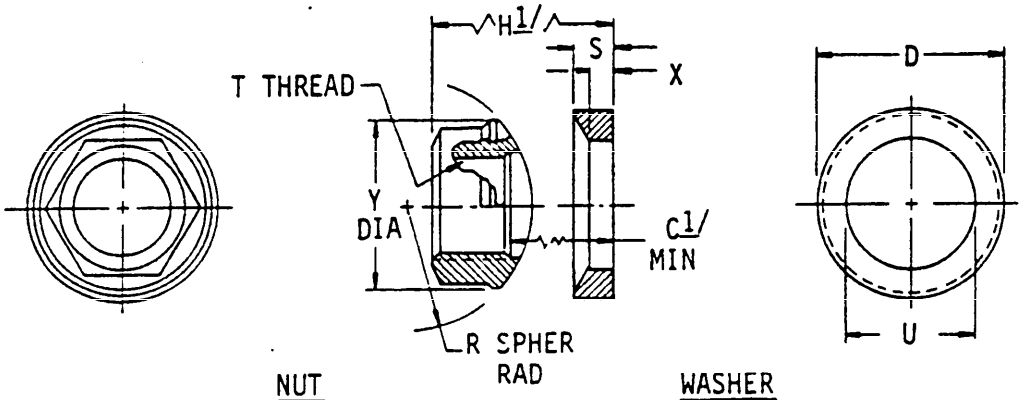

NUT WASHER

Material	Protective finish	Shear strength (psi) min
Alloy steel AMS 6304	Nickel-zinc alloy plate and hydrogen embrittlement	Not specified
Heat resistant nickel base alloy per AMS 5756 M252	Silver plate	Not specified

TABLE I. NAS1288 Dash numbers.

T Thread	H 1/ Max	C 1/ Min	D Dia max	R	S	U Dia	X Ref	Y Dia max	Dash no.	
									1400°F	800°F
.1640-32 UNJC-3B	.220	.090	.327	.200	.050	.215	.020	.300	C08 C08W	08 08W
.1900-32-UNJF-3B	.240	.090	.365	.250	.060	.240	.025	.330	C3 C3W	3 3W
.2500-28 UNJF-3B	.280	.090	.457	.300	.080	.310	.040	.420	C4 C4W	4 4W
.3125-24 UNJF-3B	.320	.090	.549	.350	.100	.375	.055	.520	C5 C5W	5 5W
.3750-24 UNJF-3B	.360	.090	.640	.400	.120	.445	.070	.620	C6 C6W	6 6W

1/ Dimension "C" total counterbore and dimension "H" exist at assembly of nut and washer.

THIS DOCUMENT PROVIDED BY THE ABBOTT AEROSPACE
TECHNICAL LIBRARY
ABBOTTAEROSPACE.COM
Downloaded from http://www.everyspec.com

THIS DOCUMENT PROVIDED BY THE ABBOTT AEROSPACE
Downloaded from http://www.everyspec.com
TECHNICAL LIBRARY
ABBOTTAEROSPACE.COM

SECTION 304

PIN-RIVET COLLAR, THREADED, TORQUE-OFF, SELF-LOCKING

APPLICABLE DOCUMENT: MIL-P-23470/18,/20,/22

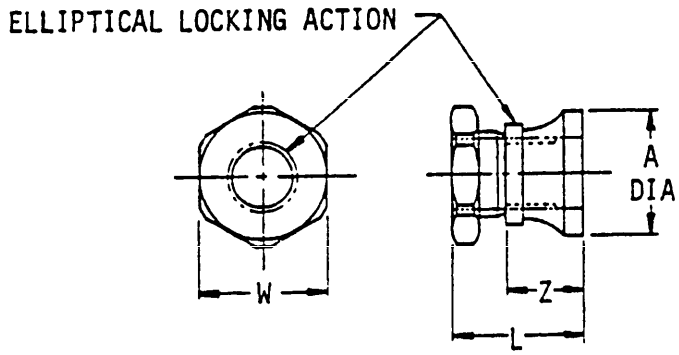

TABLE I Part numbers.

Nominal size	A Dia		Z Thickness	L Thickness		W Width across flats (hex)	1/, 2/ or 3/
	Max	Min		Max	Min		
.188	.370	.350	.240	.460	.420	.375	-1
.250	.500	.480	.315	.560	.520	.500	-2
.312	.560	.540	.360	.640	.600	.562	-3
.375	.670	.650	.405	.720	.680	.688	-4
.438	.750	.730	.470	.815	.775	.750	-5
.500	.870	.850	.520	.890	.850	.875	-6
.625	1.000	.980	.570	.960	.920	1.000	-7
.750	1.110	1.090	.700	1.230	1.190	1.125	-8
.875	1.445	1.414	.990	1.500	1.470	1.250	-9
1.000	1.732	1.700	1.125	1.702	1.672	1.500	-10

Footnotes	Part numbers	Materials	Protective finish	Threads	
				Class	Ref
1/	M23470/22 + dash no.	Aluminum alloy 6061-T6	Anodic coat	3B(UNF-3B)	HDBK H28
2/	M23470/18 + dash no.	Carbon steel ASTM A675 or A576	Zinc plate	2B(UNF-2B)	
3/	M23470/20 + dash no.	CRES 303 or 303SE of ASTM A 582			

THIS DOCUMENT PROVIDED BY THE ABBOTT AEROSPACE
Downloaded from http://www.everyspec.com
TECHNICAL LIBRARY
ABBOTTAEROSPACE.COM

THIS DOCUMENT PROVIDED BY ABBOTT AEROSPACE
Downloaded from http://www.everyspec.com
TECHNICAL LIBRARY
ABBOTTAEROSPACE.COM

SECTION 305

PIN-RIVET COLLAR, THREADED, TORQUE-OFF, SELF-LOCKING, (DOUBLE HEX)

APPLICABLE DOCUMENT: MIL-P-23470/19./21./23

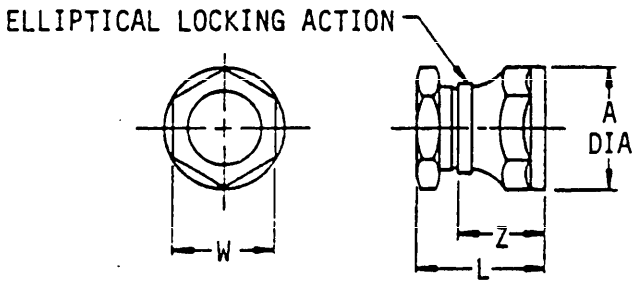

TABLE I. Part numbers.

Nominal size	A Dia		Z Thickness	L Thickness		W Width across flats (hex)	1/, 2/ or 3/
	Max	Min		Max	Min		
.188	.370	.350	.240	.460	.420	.375	-1
.250	.500	.480	.315	.540	.520	.500	-2
.312	.560	.540	.360	.640	.600	.562	-3
.375	.670	.650	.405	.720	.680	.688	-4
.438	.750	.730	.470	.815	.775	.750	-5
.500	.870	.850	.520	.890	.850	.875	-6
.625	1.000	.980	.570	.960	.920	1.000	-7
.750	1.110	1.090	.700	1.230	1.190	1.125	-8
.875	1.445	1.414	.990	1.500	1.470	1.250	-9
1.000	1.732	1.700	1.125	1.702	1.672	1.500	-10

Footnotes	Part Numbers	Materials	Protective finish	Threads	
				Class	Ref
1/	M23470/23 + dash no.	Aluminum alloy 6061-T6	Anodic coat	3B(UNF-3B)	HDBK H28
2/	M23470/19 + dash no.	Carbon steel ASTM A675 or A576	Zinc plate	2B(UNC-2B)	
3/	M23470/21 + dash no.	CRES 303 or 303SE of ASTM A582			

THIS DOCUMENT PROVIDED BY THE ABBOTT AEROSPACE
TECHNICAL LIBRARY
ABBOTTAEROSPACE.COM
Downloaded from http://www.everyspec.com

THIS DOCUMENT PROVIDED BY THE ABBOTT AEROSPACE
Downloaded from http://www.everyspec.com
TECHNICAL LIBRARY
ABBOTTAEROSPACE.COM

SECTION 401

BOLT-LOCK, SHEAR, 100° HEAD, PULL-TYPE, TITANIUM ALLOY

APPLICABLE DOCUMENT: NAS 2506 THRU 2512

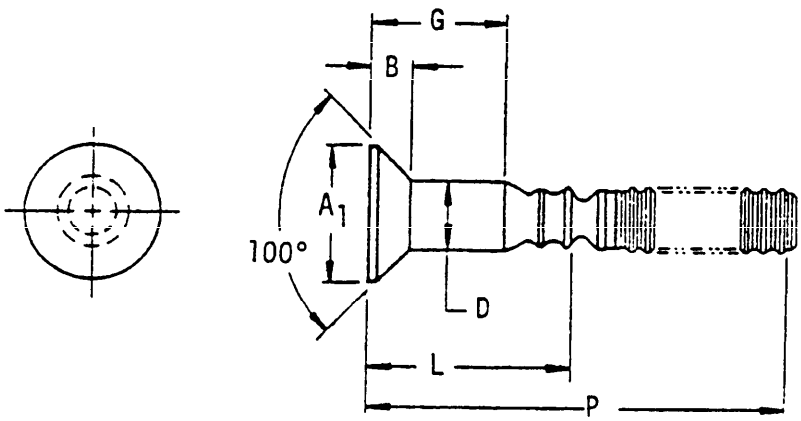

Material	Protective finish	Shear strength (psi) min
Titanium alloy 6AL-4V	None	95,000

TABLE I. Pin-rivet, groove, configuration part numbers.

D Nom size	A_1 Min dia	B Max	Basic part number
.190	.263	.049	NAS2506
.250	.346	.064	NAS2508
.312	.417	.070	NAS2510
.375	.496	.081	NAS2512

TABLE II. NAS2506, 2508, 2510 and 2512 Dash numbers.

	Grip range		.190 Dia		.250 Dia		.312 Dia		.375 Dia		Grip dash number
G	Min	Max	L	P	L	P	L	P	L	P	
.125	.062	.125	.319	1.18	-	-	-	-	-	-	-02
.188	.126	.188	.381	1.24	.433	1.38	.458	1.49	.509	1.61	-03
.250	.189	.250	.444	1.30	.496	1.45	.521	1.55	.572	1.67	-04
.312	.251	.312	.506	1.37	.558	1.51	.583	1.62	.634	1.74	-05
.375	.313	.375	.569	1.43	.621	1.57	.646	1.68	.697	1.80	-06
.438	.376	.438	.631	1.49	.683	1.63	.708	1.74	.759	1.86	-07
.500	.439	.500	.694	1.55	.746	1.70	.771	1.80	.822	1.92	-08
.562	.501	.562	.756	1.62	.808	1.76	.833	1.87	.884	1.99	-09
.625	.563	.625	.819	1.68	.871	1.82	.896	1.93	.947	2.05	-10
.688	.626	.688	.881	1.74	.933	1.88	.958	1.99	1.009	2.11	-11
.750	.689	.750	.944	1.80	.996	1.95	1.021	2.05	1.072	2.17	-12
.812	.751	.812	1.006	1.87	1.058	2.01	1.083	2.12	1.134	2.24	-13
.875	.813	.875	1.069	1.93	1.121	2.07	1.146	2.18	1.197	2.30	-14
.938	.876	.938	1.131	1.99	1.183	2.13	1.208	2.24	1.259	2.36	-15
1.000	.939	1.000	1.194	2.05	1.246	2.20	1.271	2.30	1.322	2.42	-16
1.062	1.001	1.062	1.256	2.12	1.308	2.26	1.333	2.37	1.384	2.49	-17
1.125	1.063	1.125	1.319	2.18	1.371	2.32	1.396	2.43	1.447	2.55	-18
1.188	1.126	1.188	1.381	2.24	1.433	2.38	1.458	2.49	1.509	2.61	-19
1.250	1.189	1.250	1.444	2.30	1.496	2.45	1.521	2.55	1.572	2.67	-20
1.312	1.251	1.312	1.506	2.37	1.558	2.51	1.583	2.62	1.634	2.74	-21
1.375	1.313	1.375	1.569	2.43	1.621	2.57	1.646	2.68	1.697	2.80	-22
1.438	1.376	1.438	1.631	2.49	1.683	2.63	1.708	2.74	1.759	2.86	-23
1.500	1.439	1.500	1.694	2.55	1.746	2.70	1.771	2.80	1.822	2.92	-24
1.562	1.501	1.562	1.756	2.62	1.808	2.76	1.833	2.87	1.884	2.99	-25
1.625	1.563	1.625	1.819	2.68	1.871	2.82	1.896	2.93	1.947	3.05	-26
1.688	1.626	1.688	1.881	2.74	1.933	2.88	1.958	2.99	2.009	3.11	-27
1.750	1.689	1.750	1.944	2.80	1.996	2.95	2.021	3.05	2.072	3.17	-28
1.812	1.751	1.812	2.006	2.87	2.058	3.01	2.083	3.12	2.134	3.24	-29
1.875	1.813	1.875	2.069	2.93	2.121	3.07	2.146	3.18	2.197	3.30	-30
1.938	1.876	1.938	2.131	2.99	2.183	3.13	2.208	3.24	2.259	3.36	-31
2.000	1.939	2.000	2.194	3.05	2.246	3.20	2.271	3.30	2.322	3.42	-32

NOTE: For collar selection, see NAS1080.

THIS DOCUMENT IS BEING PROVIDED BY
TECHNICAL LIBRARY
ABBOTTAEROSPACE.COM
Downloaded from http://www.everyspec.com

THIS DOCUMENT PROVIDED BY THE ABBOTT AEROSPACE
Downloaded from http://www.everyspec.com
TECHNICAL LIBRARY
ABBOTTAEROSPACE.COM

SECTION 402

BOLT-LOCK, SHEAR, 100° HEAD, STUMP-TYPE, TITANIUM ALLOY

APPLICABLE DOCUMENT: NAS2705 THRU 2712

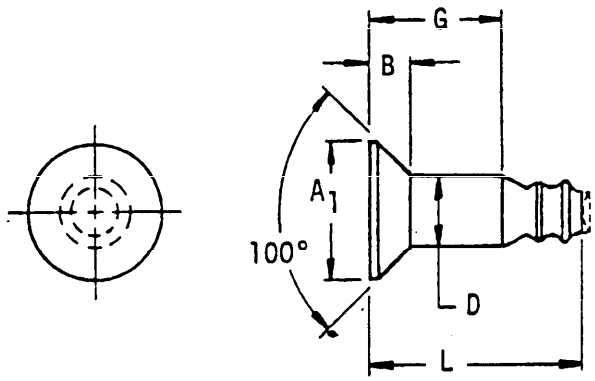

Material	Protective finish	Shear strength (psi) min
Titanium alloy 6AL-4V	None	95,000

TABLE I. Pin-rivet, groove, configuration part numbers.

D Nom size	A_1 Min dia	B Max	Basic part number
.164	.220	.040	NAS 2705
.190	.263	.049	NAS 2706
.250	.346	.063	NAS 2708
.312	.417	.070	NAS 2710
.375	.496	.081	NAS 2712

THIS DOCUMENT PROVIDED BY THE ABBOTT AEROSPACE
Downloaded from http://www.everyspec.com
TECHNICAL LIBRARY
ABBOTTAEROSPACE.COM

TABLE II. NAS2705, 2706, 2708, 2710 and 2712 Dash numbers.

G	Grip range		G	L					Grip dash number
	Min	Max		.156 Dia	.190 Dia	.250 Dia	.312 Dia	.375 Dia	
.062	1/	.062	.062	.236	-	-	-	-	-01
.125	.063	.125	.125	.298	.323				-02
.188	.126	.188	.188	.361	.386	.439	.458	.501	-03
.250	.189	.250	.250	.423	.448	.501	.520	.563	-04
.312	.251	.312	.312	.486	.511	.564	.583	.626	-05
.375	.313	.375	.375	.548	.574	.626	.645	.688	-06
.438	.376	.438	.438	.611	.637	.689	.708	.751	-07
.500	.439	.500	.500	.673	.699	.751	.770	.813	-08
.562	.501	.562	.562	.736	.762	.814	.833	.876	-09
.625	.563	.625	.625	.798	.824	.876	.895	.938	-10
.688	.626	.688	.688	.861	.887	.939	.958	1.001	-11
.750	.689	.750	.750	.923	.949	1.001	1.020	1.063	-12
.812	.751	.812	.812	.986	1.012	1.064	1.083	1.126	-13
.875	.813	.875	.875	1.048	1.074	1.126	1.145	1.188	-14
.938	.876	.938	.938	1.111	1.137	1.189	1.208	1.251	-15
1.000	.939	1.000	1.000	1.173	1.199	1.251	1.270	1.313	-16
1.062	1.001	1.062	1.062	-	1.261	1.314	1.333	1.376	-17
1.125	1.063	1.125	1.125	-	1.323	1.376	1.395	1.438	-18
1.188	1.126	1.188	1.188	-	1.386	1.439	1.458	1.501	-19
1.250	1.189	1.250	1.250	-	1.448	1.501	1.520	1.563	-20
1.312	1.251	1.312	1.312	-	1.511	1.564	1.583	1.626	-21
1.375	1.313	1.375	1.375	-	1.574	1.626	1.645	1.688	-22
1.438	1.376	1.438	1.438	-	1.637	1.689	1.708	1.751	-23
1.500	1.439	1.500	1.500	-	1.699	1.751	1.770	1.813	-24
1.562	1.501	1.562	1.562	-	1.762	1.814	1.833	1.876	-25
1.625	1.563	1.625	1.625	-	1.824	1.876	1.895	1.938	-26
1.688	1.626	1.688	1.688	-	1.887	1.939	1.958	2.001	-27
1.750	1.689	1.750	1.750	-	1.949	2.001	2.020	2.063	-28
1.812	1.751	1.812	1.812	-	2.012	2.064	2.083	2.126	-29
1.875	1.813	1.875	1.875	-	2.074	2.126	2.145	2.188	-30
1.938	1.876	1.938	1.938	-	2.137	2.189	2.208	2.251	-31
2.000	1.939	2.000	2.000	-	2.199	2.251	2.270	2.313	-32

1/ Minimum grip for -01 varies with material to be fastened together.

NOTE: For collar selection, see NAS1080.

THIS DOCUMENT PROVIDED BY THE ABBOTT AEROSPACE
Downloaded from http://www.everyspec.com
TECHNICAL LIBRARY
ABBOTTAEROSPACE.COM

SECTION 403

BOLT-LOCK, SHEAR, PROTRUDING HEAD, PULL-TYPE, TITANIUM ALLOY

APPLICABLE DOCUMENT: NAS 2406 THRU 2412

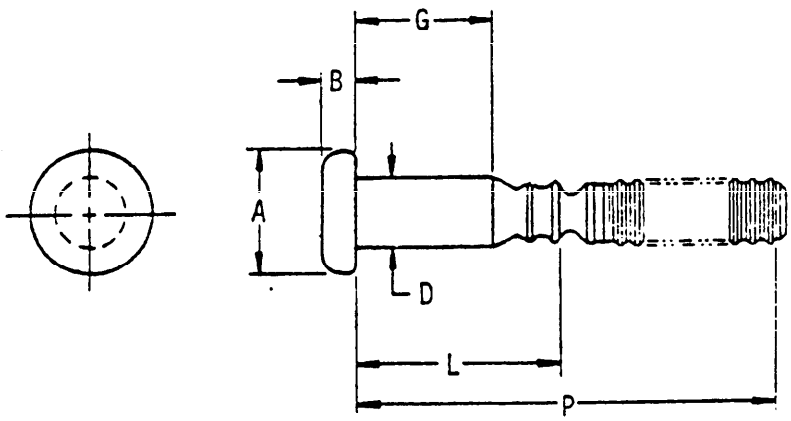

Material	Protective finish	Shear strength (psi) min
Titanium alloy 6AL-4V	None	95,000

TABLE I. Pin-rivet, groove, configuration part numbers.

D Nom Size	A Dia	B	Basic part number
.190	.302 .288	.063 .056	NAS2406
.250	.377 .363	.081 .074	NAS2408
.312	.471 .455	.100 .094	NAS2410
.375	.565 .549	.120 .113	NAS2412

TABLE II. NAS2406, 2408, 2410 and 2412 Dash numbers.

G	Grip range		.190 Dia		.250 Dia		.312 Dia		.375 Dia		Grip dash number
	Min	Max	L	P	L	P	L	P	L	P	
.062	1/	.062	.256	-	-	-	-	-	-	-	-01
.125	.063	.125	.319	1.18	.371	1.32	.396	1.43	.447	1.55	-02
.188	.126	.188	.381	1.24	.433	1.38	.458	1.49	.509	1.61	-03
.250	.189	.250	.444	1.30	.496	1.45	.521	1.55	.572	1.67	-04
.312	.251	.312	.506	1.37	.558	1.51	.583	1.62	.634	1.74	-05
.375	.313	.375	.569	1.43	.621	1.57	.646	1.68	.697	1.80	-06
.438	.376	.438	.631	1.49	.683	1.63	.708	1.74	.759	1.86	-07
.500	.439	.500	.694	1.55	.746	1.70	.771	1.80	.822	1.92	-08
.562	.501	.562	.756	1.62	.808	1.76	.833	1.87	.884	1.99	-09
.625	.563	.625	.819	1.68	.871	1.82	.896	1.93	.947	2.05	-10
.688	.626	.688	.851	1.74	.933	1.88	.958	1.99	1.009	2.11	-11
.750	.689	.750	.944	1.80	.996	1.95	1.021	2.05	1.072	2.17	-12
.812	.751	.812	1.006	1.87	1.058	2.01	1.083	2.12	1.134	2.24	-13
.875	.813	.875	1.069	1.93	1.121	2.07	1.146	2.18	1.197	2.30	-14
.938	.876	.938	1.131	1.99	1.183	2.13	1.208	2.24	1.259	2.36	-15
1.000	.939	1.000	1.194	2.05	1.246	2.20	1.271	2.30	1.322	2.42	-16
1.062	1.001	1.062	1.256	2.12	1.308	2.26	1.333	2.37	1.384	2.49	-17
1.125	1.063	1.125	1.319	2.18	1.371	2.32	1.396	2.43	1.447	2.55	-18
1.188	1.126	1.188	1.381	2.24	1.433	2.38	1.458	2.49	1.509	2.61	-19
1.250	1.189	1.250	1.444	2.30	1.496	2.45	1.521	2.55	1.572	2.67	-20
1.312	1.251	1.312	1.506	2.37	1.558	2.51	1.583	2.62	1.634	2.74	-21
1.375	1.313	1.375	1.569	2.43	1.621	2.57	1.646	2.68	1.697	2.80	-22
1.438	1.376	1.438	1.631	2.49	1.683	2.63	1.708	2.74	1.759	2.86	-23
1.500	1.439	1.500	1.694	2.55	1.746	2.70	1.771	2.80	1.822	2.92	-24
1.562	1.501	1.562	1.756	2.62	1.808	2.76	1.833	2.87	1.884	2.99	-25
1.625	1.563	1.625	1.819	2.68	1.871	2.82	1.896	2.93	1.947	3.05	-26
1.688	1.626	1.688	1.881	2.74	1.933	2.88	1.958	2.99	2.009	3.11	-27
1.750	1.689	1.750	1.944	2.80	1.996	2.95	2.021	3.05	2.072	3.17	-28
1.812	1.751	1.812	2.006	2.87	2.058	3.01	2.083	3.12	2.134	3.24	-29
1.875	1.813	1.875	2.069	2.93	2.121	3.07	2.146	3.18	2.197	3.30	-30
1.938	1.876	1.938	2.131	2.99	2.183	3.13	2.208	3.24	2.259	3.36	-31
2.000	1.939	2.000	2.194	3.05	2.246	3.20	2.271	3.30	2.322	3.42	-32

1/ Minimum grip for -01 varies with materials to be fastened together.

OTE: For collar selection, see NAS1080.

This Document Provided from http://www.everyspec.com
TECHNICAL LIBRARY
ABBOTTAEROSPACE.COM

THIS DOCUMENT PROVIDED BY THE ABBOTT AEROSPACE
Downloaded from http://www.everyspec.com
TECHNICAL LIBRARY
ABBOTTAEROSPACE.COM

SECTION 404

BOLT-LOCK, SHEAR, PROTRUDING HEAD, STUMP-TYPE, TITANIUM ALLOY

APPLICABLE DOCUMENT: NAS2605 THRU 2612

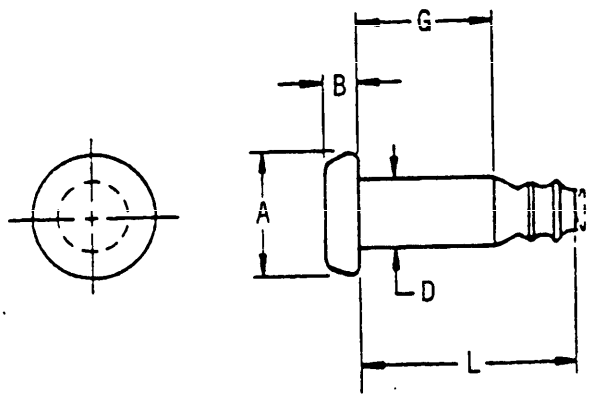

Material	Protective finish	Shear strength (psi) min
Titanium alloy 6AL-4V	None	95,000

TABLE I. Pin-rivet, groove, configuration part numbers.

D Nom size	A Dia	B	Basic part number
.164	.249 .235	.048 .036	NAS2605
.190	.302 .288	.056 .044	NAS2606
.250	.377 .363	.070 .058	NAS2608
.312	.471 .455	.079 .067	NAS2610
.375	.565 .549	.089 .077	NAS2612

THIS DOCUMENT PROVIDED BY THE ABBOTT AEROSPACE
Downloaded from http://www.everyspec.com
TECHNICAL LIBRARY
ABBOTTAEROSPACE.COM

TABLE II. NAS2605, 2606, 2608, 2610 and 2612 Dash numbers.

G	Grip range		G	L					Grip dash number
	Min	Max		.156 Dia	.190 Dia	.250 Dia	.312 Dia	.375 Dia	
.062	1/	.062	.062	.236	.261	-	-	-	-01
.125	.063	.125	.125	.298	.323	.376	.395	.438	-02
.188	.126	.188	.188	.361	.386	.439	.458	.501	-03
.250	.189	.250	.250	.423	.448	.501	.520	.563	-04
.312	.251	.312	.312	.486	.511	.564	.583	.626	-05
.375	.313	.375	.375	.548	.574	.626	.645	.688	-06
.438	.376	.438	.438	.611	.637	.689	.708	.751	-07
.500	.439	.500	.500	.673	.699	.751	.770	.813	-08
.562	.501	.562	.562	.736	.762	.814	.833	.876	-09
.625	.563	.625	.625	.798	.824	.876	.895	.938	-10
.688	.626	.688	.688	.861	.887	.939	.958	1.001	-11
.750	.689	.750	.750	.923	.949	1.001	1.020	1.063	-12
.812	.751	.812	.812	.986	1.012	1.064	1.083	1.126	-13
.875	.813	.875	.875	1.048	1.074	1.126	1.145	1.188	-14
.938	.876	.938	.938	1.111	1.137	1.189	1.208	1.251	-15
1.000	.939	1.000	1.000	1.173	1.199	1.251	1.270	1.313	-16
1.062	1.001	1.062	1.062	-	1.261	1.314	1.333	1.376	-17
1.125	1.063	1.125	1.125	-	1.323	1.376	1.395	1.438	-18
1.188	1.126	1.188	1.188	-	1.386	1.439	1.458	1.501	-19
1.250	1.189	1.250	1.250	-	1.448	1.501	1.520	1.563	-20
1.312	1.251	1.312	1.312	-	1.511	1.564	1.583	1.626	-21
1.375	1.313	1.375	1.375	-	1.574	1.626	1.645	1.688	-22
1.438	1.376	1.438	1.438	-	1.637	1.689	1.708	1.751	-23
1.500	1.439	1.500	1.500	-	1.699	1.751	1.770	1.813	-24
1.562	1.501	1.562	1.562	-	1.762	1.814	1.833	1.876	-25
1.625	1.563	1.625	1.625	-	1.824	1.876	1.895	1.938	-26
1.688	1.626	1.688	1.688	-	1.887	1.939	1.958	2.001	-27
1.750	1.689	1.750	1.750	-	1.949	2.001	2.020	2.063	-28
1.812	1.751	1.812	1.812	-	2.012	2.064	2.083	2.126	-29
1.875	1.813	1.875	1.875	-	2.074	2.126	2.145	2.188	-30
1.938	1.876	1.938	1.938	-	2.137	2.189	2.208	2.251	-31
2.000	1.939	2.000	2.000	-	2.199	2.251	2.270	2.313	-32

1/ Minimum grip for -01 varies with materials to be fastened together.

NOTE: For collar selection, see NAS1080.

THIS DOCUMENT PROVIDED BY THE ABBOTT AEROSPACE
TECHNICAL LIBRARY
Downloaded from http://www.everyspec.com
ABBOTTAEROSPACE.COM

SECTION 405

BOLT-LOCK, TENSION, 100° CROWN HEAD, PULL-TYPE, TITANIUM ALLOY

APPLICABLE DOCUMENT: NAS2125 THRU 2132

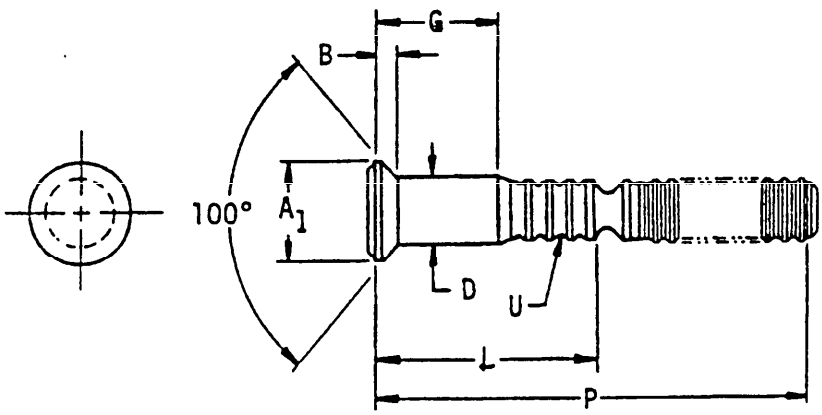

Material	Protective finish	Tensile strength (psi) min
Titanium alloy 6AL-4V	None	106,000

TABLE I. Pin-rivet, groove, configuration part numbers.

D Nom size	A_1 Min dia	B Ref	U 1/	Basic part number
.164	.229	.036	4	NAS2125
.190	.269	.045	4	NAS2126
.250	.361	.061	4	NAS2128
.312	.440	.073	5	NAS2130
.375	.537	.086	5	NAS2132

1/ Number of locking grooves.

TABLE II. NAS2125, 2126, 2128, 2130 and 2132 Dash numbers.

G	Grip range		.164 Dia		.190 Dia		.250 Dia		.312 Dia		.375 Dia		Grip dash number
	Min	Max	L	P	L	P	L	P	L	P	L	P	
.125	.095	.156	.313	1.12	.358	1.25	-	-	-	-	-	-	-02
.188	.157	.219	.376	1.18	.421	1.32	.499	1.45	.627	1.64	.734	1.80	-03
.250	.220	.281	.438	1.25	.483	1.38	.562	1.51	.690	1.70	.797	1.86	-04
.312	.282	.344	.501	1.31	.546	1.44	.624	1.57	.752	1.77	.859	1.92	-05
.375	.345	.406	.563	1.37	.608	1.50	.687	1.64	.815	1.83	.922	1.98	-06
.438	.407	.469	.626	1.43	.671	1.57	.749	1.70	.877	1.89	.984	2.05	-07
.500	.470	.531	.688	1.50	.733	1.63	.812	1.76	.940	1.95	1.047	2.11	-08
.562	.532	.594	.751	1.56	.796	1.69	.874	1.82	1.002	2.02	1.109	2.17	-09
.625	.595	.656	.813	1.62	.858	1.75	.937	1.89	1.065	2.08	1.172	2.23	-10
.688	.657	.719	.876	1.68	.921	1.82	.999	1.95	1.127	2.14	1.234	2.30	-11
.750	.720	.781	.938	1.75	.983	1.88	1.062	2.01	1.190	2.20	1.297	2.36	-12
.812	.782	.844	1.001	1.81	1.046	1.94	1.124	2.07	1.252	2.27	1.359	2.42	-13
.875	.845	.906	1.063	1.87	1.108	2.00	1.187	2.14	1.315	2.33	1.422	2.48	-14
.938	.907	.969	1.126	1.93	1.171	2.07	1.249	2.20	1.377	2.39	1.484	2.55	-15
1.000	.970	1.031	1.188	2.00	1.233	2.13	1.312	2.26	1.440	2.45	1.547	2.61	-16
1.062	1.032	1.094	1.251	2.06	1.296	2.19	1.374	2.32	1.502	2.52	1.609	2.67	-17
1.125	1.095	1.156	1.313	2.12	1.358	2.25	1.437	2.39	1.565	2.58	1.672	2.73	-18
1.188	1.157	1.219	1.376	2.18	1.421	2.32	1.499	2.45	1.627	2.64	1.734	2.80	-19
1.250	1.220	1.281	1.438	2.25	1.483	2.38	1.562	2.51	1.690	2.70	1.797	2.86	-20
1.312	1.282	1.344	1.501	2.31	1.546	2.44	1.624	2.57	1.752	2.77	1.859	2.92	-21
1.375	1.345	1.406	1.563	2.37	1.608	2.50	1.687	2.64	1.815	2.83	1.922	2.98	-22
1.438	1.407	1.469	-	-	1.671	2.57	1.749	2.70	1.877	2.89	1.984	3.05	-23
1.500	1.470	1.531	-	-	1.733	2.63	1.812	2.76	1.940	2.95	2.047	3.11	-24
1.562	1.532	1.594	-	-	1.796	2.69	1.874	2.82	2.002	3.02	2.109	3.17	-25
1.625	1.595	1.656	-	-	1.858	2.75	1.937	2.89	2.065	3.08	2.172	3.23	-26
1.688	1.657	1.719	-	-	1.921	2.82	1.999	2.95	2.127	3.14	2.234	3.30	-27
1.750	1.720	1.781	-	-	1.983	2.88	2.062	3.01	2.190	3.20	2.297	3.36	-28
1.812	1.782	1.844	-	-	2.046	2.94	2.124	3.07	2.252	3.27	2.359	3.42	-29
1.875	1.845	1.906	-	-	2.108	3.00	2.187	3.14	2.315	3.33	2.422	3.48	-30
1.938	1.907	1.969	-	-	2.171	3.07	2.249	3.20	2.377	3.39	2.484	3.55	-31
2.000	1.970	2.031	-	-	2.233	3.13	2.312	3.26	2.440	3.45	2.547	3.61	-32

NOTES: 1. For collar selection, see NAS1080.

THIS DOCUMENT IS BEING PROVIDED BY ABBOTT AEROSPACE
TECHNICAL LIBRARY
ABBOTTAEROSPACE.COM
Downloaded from http://www.everyspec.com

THIS DOCUMENT PROVIDED BY THE ABBOTT AEROSPACE
Downloaded from http://www.everyspec.com
TECHNICAL LIBRARY
ABBOTTAEROSPACE.COM

SECTION 406

BOLT-LOCK, TENSION, 100° CROWN HEAD, STUMP-TYPE, TITANIUM ALLOY

APPLICABLE DOCUMENT: NAS2325 THRU 2332

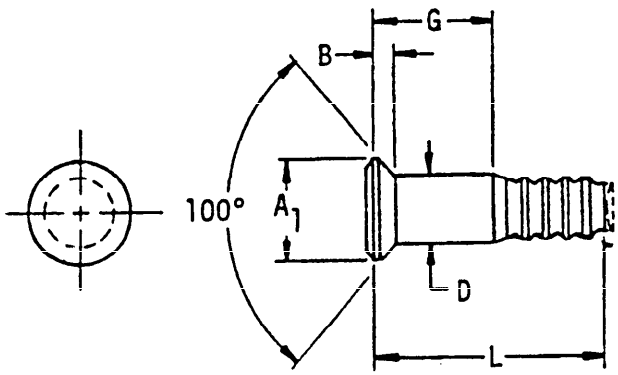

Material	Protective finish	Tensile strength (psi) min
Titanium alloy 6AL-4V	None	106,000

TABLE I. Pin-rivet, groove, configuration part numbers.

D Nom size	A_1 Min dia	B Max	Basic part number
.164	.229	.036	NAS2325
.190	.269	.045	NAS2326
.250	.361	.061	NAS2328
.312	.440	.073	NAS2330
.375	.537	.086	NAS2332

THIS DOCUMENT PROVIDED BY THE ABBOTT AEROSPACE
Downloaded from http://www.everyspec.com
TECHNICAL LIBRARY
ABBOTTAEROSPACE.COM

TABLE II. NAS2325, 2326, 2328, 2330 and 2332 Dash numbers.

G	Grip range		L					Grip dash number
	Min	Max	.164 Dia	.190 Dia	.250 Dia	.312 Dia	.375 Dia	
.125	.095	.156	.324	.373	.456	-	-	-02
.188	.157	.219	.387	.435	.519	.602	.697	-03
.250	.220	.281	.449	.498	.581	.664	.760	-04
.312	.282	.344	.512	.560	.644	.727	.822	-05
.375	.345	.406	.574	.623	.706	.789	.885	-06
.438	.407	.469	.637	.685	.769	.852	.947	-07
.500	.470	.531	.699	.748	.831	.914	1.010	-08
.562	.532	.594	.762	.810	.894	.976	1.072	-09
.625	.595	.656	.824	.873	.956	1.039	1.135	-10
.688	.657	.719	.887	.935	1.019	1.101	1.197	-11
.750	.720	.781	.949	.998	1.081	1.164	1.260	-12
.812	.782	.844	1.012	1.060	1.144	1.226	1.322	-13
.875	.845	.906	1.074	1.123	1.206	1.289	1.385	-14
.938	.907	.969	1.137	1.185	1.269	1.351	1.447	-15
1.000	.970	1.031	1.199	1.248	1.331	1.414	1.510	-16
1.062	1.032	1.094	1.262	1.310	1.394	1.476	1.572	-17
1.125	1.095	1.156	1.324	1.373	1.456	1.539	1.635	-18
1.188	1.157	1.219	1.387	1.435	1.519	1.602	1.697	-19
1.250	1.220	1.281	1.449	1.498	1.581	1.664	1.760	-20
1.312	1.282	1.344	1.512	1.560	1.644	1.727	1.822	-21
1.375	1.345	1.406	1.574	1.623	1.706	1.789	1.885	-22
1.438	1.407	1.469	1.637	1.685	1.769	1.852	1.947	-23
1.500	1.470	1.531	1.699	1.748	1.831	1.914	2.010	-24
1.562	1.532	1.594	1.762	1.810	1.894	1.976	2.072	-25
1.625	1.595	1.656	1.824	1.873	1.956	2.039	2.135	-26
1.688	1.657	1.719	1.887	1.935	2.019	2.101	2.197	-27
1.750	1.720	1.781	1.949	1.998	2.081	2.164	2.260	-28
1.812	1.782	1.844	2.012	2.060	2.144	2.226	2.322	-29
1.875	1.845	1.906	2.074	2.123	2.206	2.289	2.385	-30
1.938	1.907	1.969	2.137	2.185	2.269	2.351	2.447	-31
2.000	1.970	2.031	2.199	2.248	2.331	2.414	2.510	-32

NOTE: For collar selection, see NAS1080.

THIS DOCUMENT PROVIDED BY THE ABBOTT AEROSPACE
Downloaded from http://www.everyspec.com
TECHNICAL LIBRARY
ABBOTTAEROSPACE.COM

SECTION 407

BOLT-LOCK, TENSION, 100° HEAD (MS20426), PULL-TYPE, TITANIUM ALLOY

APPLICABLE DOCUMENT: NAS2115 THRU 2122

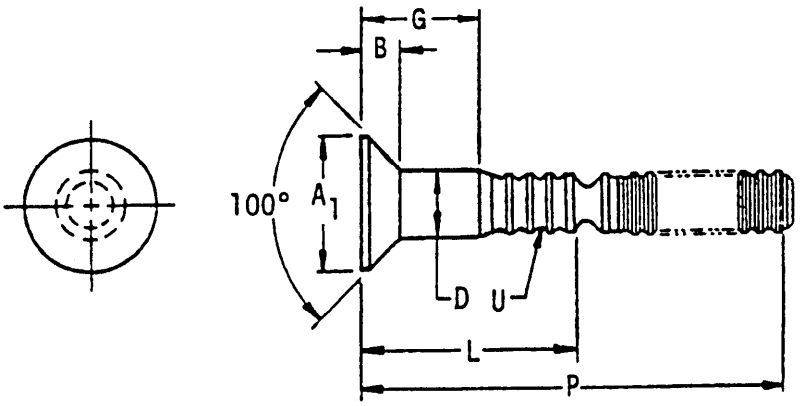

Material	Protective finish	Tensile strength (psi) min
Titanium alloy 6AL-4V	None	106,000

TABLE I. Pin-rivet, groove, configuration part numbers.

D Nom Size	A_1 Min dia	B Max	$U_{1/}$	Basic part number
.164	.263	.055	4	NAS2115
.190	.316	.071	4	NAS2116
.250	.428	.098	4	NAS2118
.312	.508	.108	5	NAS2120
.375	.629	.137	5	NAS2122

1/ Number of locking grooves.

TABLE II. NAS2115, 2116, 2118, 2120 and 2122 Dash numbers.

G	Grip range		.164 Dia		.190 Dia		.250 Dia		.312 Dia		.375 Dia		Grip dash number
	Min	Max	L	P	L	P	L	P	L	P	L	P	
.125	.095	.156	.313	1.12	.358	1.25							-02
.188	.157	.219	.376	1.18	.421	1.32	.499	1.45	.627	1.64	.734	1.80	-03
.250	.220	.281	.438	1.25	.483	1.38	.562	1.51	.690	1.70	.797	1.86	-04
.312	.282	.344	.501	1.31	.546	1.44	.624	1.57	.752	1.77	.859	1.92	-05
.375	.345	.406	.563	1.37	.608	1.50	.687	1.64	.815	1.83	.922	1.98	-06
.438	.407	.469	.626	1.43	.671	1.57	.749	1.70	.877	1.89	.984	2.05	-07
.500	.470	.531	.688	1.50	.733	1.63	.812	1.76	.940	1.95	1.047	2.11	-08
.562	.532	.594	.751	1.56	.796	1.69	.874	1.82	1.002	2.02	1.109	2.17	-09
.625	.595	.656	.813	1.62	.858	1.75	.937	1.89	1.065	2.08	1.172	2.23	-10
.688	.657	.719	.876	1.68	.921	1.82	.999	1.95	1.127	2.14	1.234	2.30	-11
.750	.720	.781	.938	1.75	.983	1.88	1.062	2.01	1.190	2.20	1.297	2.36	-12
.812	.782	.844	1.001	1.81	1.046	1.94	1.124	2.07	1.252	2.27	1.359	2.42	-13
.875	.845	.906	1.063	1.87	1.108	2.00	1.187	2.14	1.315	2.33	1.422	2.48	-14
.938	.907	.969	1.126	1.93	1.171	2.07	1.249	2.20	1.377	2.39	1.484	2.55	-15
1.000	.970	1.031	1.188	2.00	1.233	2.13	1.312	2.26	1.440	2.45	1.547	2.61	-16
1.062	1.032	1.094	1.251	2.06	1.296	2.19	1.374	2.32	1.502	2.52	1.609	2.67	-17
1.125	1.095	1.156	1.313	2.12	1.358	2.25	1.437	2.39	1.565	2.58	1.672	2.73	-18
1.188	1.157	1.219	1.376	2.18	1.421	2.32	1.499	2.45	1.627	2.64	1.734	2.80	-19
1.250	1.220	1.281	1.438	2.25	1.483	2.38	1.562	2.51	1.690	2.70	1.797	2.86	-20
1.312	1.282	1.344	1.501	2.31	1.546	2.44	1.624	2.57	1.752	2.77	1.859	2.92	-21
1.375	1.345	1.406	1.563	2.37	1.608	2.50	1.687	2.64	1.815	2.83	1.922	2.98	-22
1.438	1.407	1.469	-	-	1.671	2.57	1.749	2.70	1.877	2.89	1.984	3.05	-23
1.500	1.470	1.531	-	-	1.733	2.63	1.812	2.76	1.940	2.95	2.047	3.11	-24
1.562	1.532	1.594	-	-	1.796	2.69	1.874	2.82	2.002	3.02	2.109	3.17	-25
1.625	1.595	1.656	-	-	1.858	2.75	1.937	2.89	2.065	3.08	2.172	3.23	-26
1.688	1.657	1.719	-	-	1.921	2.82	1.999	2.95	2.127	3.14	2.234	3.30	-27
1.750	1.720	1.781	-	-	1.983	2.88	2.062	3.01	2.190	3.20	2.297	3.36	-28
1.812	1.782	1.844	-	-	2.046	2.94	2.124	3.07	2.252	3.27	2.359	3.42	-29
1.875	1.845	1.906	-	-	2.108	3.00	2.187	3.14	2.315	3.33	2.422	3.48	-30
1.938	1.907	1.969	-	-	2.171	3.07	2.249	3.20	2.377	3.39	2.484	3.55	-31
2.000	1.970	2.031	-	-	2.233	3.13	2.312	3.26	2.440	3.45	2.547	3.61	-32

NOTE: For collar selection, see NAS1080.

THIS DOCUMENT IS BEING PROVIDED BY ABBOTT AEROSPACE
TECHNICAL LIBRARY
ABBOTTAEROSPACE.COM

THIS DOCUMENT PROVIDED BY THE ABBOTT AEROSPACE
TECHNICAL LIBRARY
ABBOTTAEROSPACE.COM
Downloaded from http://www.everyspec.com

SECTION 408

BOLT-LOCK, TENSION, 100° HEAD (MS20426), STUMP-TYPE, TITANIUM ALLOY

APPLICABLE DOCUMENT: NAS2315 THRU 2322

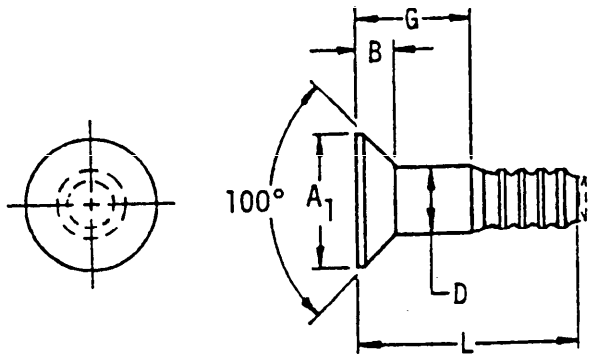

Material	Protective finish	Tensile strength (psi) min
Titanium alloy 6AL-4V	None	106,000

TABLE I. Pin-rivet, groove, configuration part numbers.

D Nom size	A_1 Min dia	B Max	Basic part number
.164	.263	.055	NAS2315
.190	.316	.071	NAS2316
.250	.428	.098	NAS2318
.312	.508	.109	NAS2320
.375	.629	.137	NAS2322

THIS DOCUMENT PROVIDED BY THE ABBOTT AEROSPACE
Downloaded from http://www.everyspec.com
TECHNICAL LIBRARY
ABBOTTAEROSPACE.COM

TABLE II. NAS2315, 2316, 2318, 2320 and 2322 Dash numbers.

G	Grip range		G	L					Grip dash number
	Min	Max		.164 Dia	.190 Dia	.250 Dia	.312 Dia	.375 Dia	
.125	.095	.156	.125	.324	.373	.456	-	-	-02
.188	.157	.219	.188	.387	.435	.519	.602	.697	-03
.250	.220	.281	.250	.449	.498	.581	.664	.760	-04
.312	.282	.344	.312	.512	.560	.644	.727	.822	-05
.375	.345	.406	.375	.574	.623	.706	.789	.885	-06
.438	.407	.469	.438	.637	.685	.769	.852	.947	-07
.500	.470	.531	.500	.699	.748	.831	.914	1.010	-08
.562	.532	.594	.562	.762	.810	.894	.976	1.072	-09
.625	.595	.656	.625	.824	.873	.956	1.039	1.135	-10
.688	.657	.719	.688	.887	.935	1.019	1.101	1.197	-11
.750	.720	.781	.750	.949	.998	1.081	1.164	1.260	-12
.812	.782	.844	.812	1.012	1.060	1.144	1.226	1.322	-13
.875	.845	.906	.875	1.074	1.123	1.206	1.289	1.385	-14
.938	.907	.969	.938	1.137	1.185	1.269	1.351	1.447	-15
1.000	.970	1.031	1.000	1.199	1.248	1.331	1.414	1.510	-16
1.062	1.032	1.094	1.062	1.262	1.310	1.394	1.476	1.572	-17
1.125	1.095	1.156	1.125	1.324	1.373	1.456	1.539	1.635	-18
1.188	1.157	1.219	1.188	1.387	1.435	1.519	1.602	1.697	-19
1.250	1.220	1.281	1.250	1.449	1.498	1.581	1.664	1.760	-20
1.312	1.282	1.344	1.312	1.512	1.560	1.644	1.727	1.822	-21
1.375	1.345	1.406	1.375	1.574	1.623	1.706	1.789	1.885	-22
1.438	1.407	1.469	1.438	1.637	1.685	1.769	1.852	1.947	-23
1.500	1.470	1.531	1.500	1.699	1.748	1.831	1.914	2.010	-24
1.562	1.532	1.594	1.562	1.762	1.810	1.894	1.976	2.072	-25
1.625	1.595	1.656	1.625	1.824	1.873	1.956	2.039	2.135	-26
1.688	1.657	1.719	1.688	1.887	1.935	2.019	2.101	2.197	-27
1.750	1.720	1.781	1.750	1.949	1.998	2.081	2.164	2.260	-28
1.812	1.782	1.844	1.812	2.012	2.060	2.144	2.226	2.322	-29
1.875	1.845	1.906	1.875	2.074	2.123	2.206	2.289	2.385	-30
1.938	1.907	1.969	1.938	2.137	2.185	2.269	2.351	2.447	-31
2.000	1.970	2.031	2.000	2.199	2.248	2.331	2.414	2.510	-32

NOTE: For collar selection, see NAS1080.

THIS DOCUMENT PROVIDED BY THE ABBOTT AEROSPACE
TECHNICAL LIBRARY
ABBOTTAEROSPACE.COM
Downloaded from http://www.everyspec.com

SECTION 409

BOLT-LOCK, TENSION, 100° HEAD (MS24694), PULL-TYPE, TITANIUM ALLOY

APPLICABLE DOCUMENT: NAS2105 THRU 2112

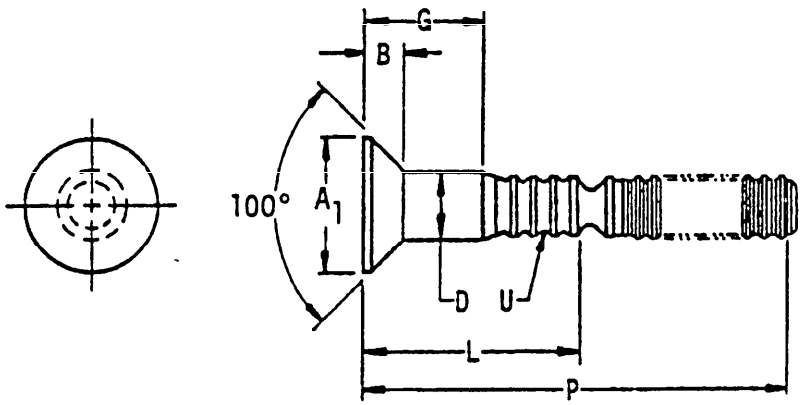

Material	Protective finish	Tensile strength (psi) min
Titanium alloy 6AL-4V	None	106,000

TABLE I. Pin-rivet, groove, configuration part numbers.

D Nom size	A_1 Min dia	B Max	U 1/	Basic part number
.190 .250	.344 .455	.083 .109	4 4	NAS2106 NAS2108

1/ Number of locking grooves.

THIS DOCUMENT PROVIDED BY THE ABBOTT AEROSPACE
Downloaded from http://www.everyspec.com
TECHNICAL LIBRARY
ABBOTTAEROSPACE.COM

TABLE II. NAS2106 and 2108 Dash numbers.

G	Grip range		.190 Dia		.250 Dia		Grip dash number
	Min	Max	L	P	L	P	
.125	.095	.156	.358	1.25	-	-	-02
.188	.157	.219	.421	1.32	.499	1.45	-03
.250	.220	.281	.483	1.38	.562	1.51	-04
.312	.282	.344	.546	1.44	.624	1.57	-05
.375	.345	.406	.608	1.50	.687	1.64	-06
.438	.407	.469	.671	1.57	.749	1.70	-07
.500	.470	.531	.733	1.63	.812	1.76	-08
.562	.532	.594	.796	1.69	.874	1.82	-09
.625	.595	.656	.858	1.75	.937	1.89	-10
.688	.657	.719	.921	1.82	.999	1.95	-11
.750	.720	.781	.983	1.88	1.062	2.01	-12
.812	.782	.844	1.046	1.94	1.124	2.07	-13
.875	.845	.906	1.108	2.00	1.187	2.14	-14
.938	.907	.969	1.171	2.07	1.249	2.20	-15
1.000	.970	1.031	1.233	2.13	1.312	2.26	-16

NOTE: For collar selection, see NAS1080.

THIS DOCUMENT PROVIDED BY THE ABBOTT AEROSPACE
Downloaded from http://www.everyspec.com
TECHNICAL LIBRARY
ABBOTTAEROSPACE.COM

SECTION 410

BOLT-LOCK, TENSION, 100° HEAD (MS24694), STUMP-TYPE, TITANIUM ALLOY

APPLICABLE DOCUMENT: NAS2306 THRU 2312

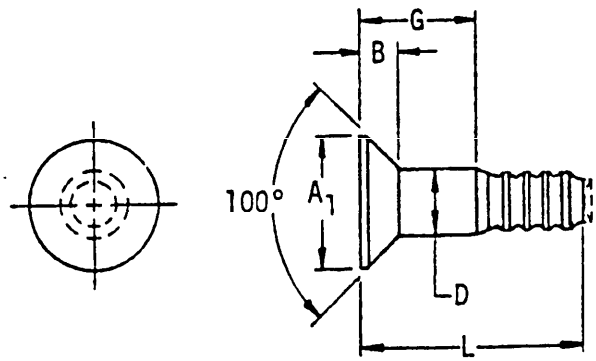

Material	Protective finish	Tensile strength (psi) min
Titanium alloy 6AL-4V	None	106,000

TABLE I. Pin-rivet, groove, configuration part numbers.

D Nom size	A_1 Min dia	B Max	Basic part number
.190	.344	.083	NAS2306
.250	.455	.109	NAS2308
.312	.574	.136	NAS2310
.375	.693	.164	NAS2312

THIS DOCUMENT PROVIDED BY THE ABBOTT AEROSPACE
Downloaded from http://www.everyspec.com
TECHNICAL LIBRARY
ABBOTTAEROSPACE.COM

TABLE II. NAS2306, 2308, 2310 and 2312 Dash numbers.

G	Grip range		L				Grip dash number
	Min	Max	.190 Dia	.250 Dia	.312 Dia	.375 Dia	
.125	.095	.156	.373	.456	-	-	-02
.188	.157	.219	.435	.519	.602	.697	-03
.250	.220	.281	.498	.581	.664	.760	-04
.312	.282	.344	.560	.644	.727	.822	-05
.375	.345	.406	.623	.706	.789	.885	-06
.438	.407	.469	.685	.769	.852	.947	-07
.500	.470	.531	.748	.831	.914	1.010	-08
.562	.532	.594	.810	.894	.976	1.072	-09
.625	.595	.656	.873	.956	1.039	1.135	-10
.688	.657	.719	.935	1.019	1.101	1.197	-11
.750	.720	.781	.998	1.081	1.164	1.260	-12
.812	.782	.844	1.060	1.144	1.226	1.322	-13
.875	.845	.906	1.123	1.206	1.289	1.385	-14
.938	.907	.969	1.185	1.269	1.351	1.447	-15
1.000	.970	1.031	1.248	1.331	1.414	1.510	-16
1.062	1.032	1.094	1.310	1.394	1.476	1.572	-17
1.125	1.095	1.156	1.373	1.456	1.539	1.635	-18
1.188	1.157	1.219	1.435	1.519	1.602	1.697	-19
1.250	1.220	1.281	1.498	1.581	1.664	1.760	-20
1.312	1.282	1.344	1.560	1.644	1.727	1.822	-21
1.375	1.345	1.406	1.623	1.706	1.789	1.885	-22
1.438	1.407	1.469	1.685	1.769	1.852	1.947	-23
1.500	1.470	1.531	1.748	1.831	1.914	2.010	-24
1.562	1.532	1.594	1.810	1.894	1.976	2.072	-25
1.625	1.595	1.656	1.873	1.956	2.039	2.135	-26
1.688	1.657	1.719	1.935	2.019	2.101	2.197	-27
1.750	1.720	1.781	1.998	2.081	2.164	2.260	-28
1.812	1.782	1.844	2.060	2.144	2.226	2.322	-29
1.875	1.845	1.906	2.123	2.206	2.289	2.385	-30
1.938	1.907	1.969	2.185	2.269	2.351	2.447	-31
2.000	1.970	2.031	2.248	2.331	2.414	2.510	-32

NOTE: For collar selection, see NAS1080.

THIS DOCUMENT PROVIDED BY THE ABBOTT AEROSPACE
Downloaded from http://www.everyspec.com
TECHNICAL LIBRARY
ABBOTTAEROSPACE.COM

SECTION 411

BOLT-LOCK, TENSION, PROTRUDING HEAD, PULL-TYPE, TITANIUM ALLOY

APPLICABLE DOCUMENT: NAS2005 THRU 2012

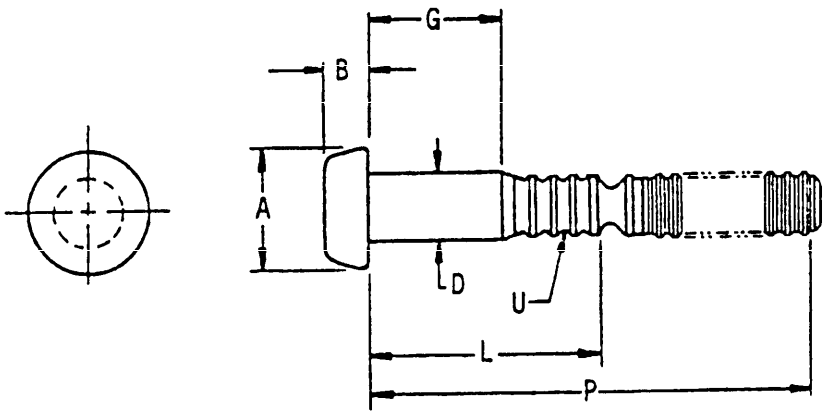

Material	Protective finish	Tensile strength (psi) min
Titanium alloy 6AL-4V	None	106,000

TABLE I. Pin-rivet, groove, configuration part numbers.

D Nom size	A Dia	B	U 1/	Basic part number
.164	.282 .258	.095 .085	4	NAS2005
.190	.327 .297	.111 .099	4	NAS2006
.250	.430 .390	.147 .128	4	NAS2008

1/ Number of locking grooves.

TABLE I. NAS2005, 2006 and 2008 Dash numbers.

G	Grip range		.164 Dia		.190 Dia		.250 Dia		Grip dash number
	Min	Max	L	P	L	P	L	P	
.062	.031	.094	.251	1.06	.296	1.19	-	-	-01
.125	.095	.156	.313	1.12	.358	1.25	.437	1.39	-02
.188	.157	.219	.376	1.18	.421	1.32	.499	1.45	-03
.250	.220	.281	.438	1.25	.483	1.38	.562	1.51	-04
.312	.282	.344	.501	1.31	.546	1.44	.624	1.57	-05
.375	.345	.406	.563	1.37	.608	1.50	.687	1.64	-06
.438	.407	.469	.626	1.43	.671	1.57	.749	1.70	-07
.500	.470	.531	.688	1.50	.733	1.63	.812	1.76	-08
.562	.532	.594	.751	1.56	.796	1.69	.874	1.82	-09
.625	.595	.656	.813	1.62	.858	1.75	.937	1.89	-10
.688	.657	.719	.876	1.68	.921	1.82	.999	1.95	-11
.750	.720	.781	.938	1.75	.983	1.88	1.062	2.01	-12
.812	.782	.844	1.001	1.81	1.046	1.94	1.124	2.07	-13
.875	.845	.906	1.063	1.87	1.108	2.00	1.187	2.14	-14
.938	.907	.969	1.126	1.93	1.171	2.07	1.249	2.20	-15
1.000	.970	1.031	1.188	2.00	1.233	2.13	1.312	2.26	-16
1.062	1.032	1.094	1.251	2.06	1.296	2.19	1.374	2.32	-17
1.125	1.095	1.156	1.313	2.12	1.358	2.25	1.437	2.39	-18
1.188	1.157	1.219	1.376	2.18	1.421	2.32	1.499	2.45	-19
1.250	1.220	1.281	1.438	2.25	1.483	2.38	1.562	2.51	-20

NOTE: For collar selection, see NAS1080.

THIS DOCUMENT WAS DOWNLOADED FROM THE ABBOTT AEROSPACE TECHNICAL LIBRARY
Downloaded from http://www.everyspec.com
TECHNICAL LIBRARY
ABBOTTAEROSPACE.COM

THIS DOCUMENT PROVIDED BY THE ABBOTT AEROSPACE
Downloaded from http://www.everyspec.com
TECHNICAL LIBRARY
ABBOTTAEROSPACE.COM

SECTION 412

BOLT-LOCK, TENSION, PROTRUDING HEAD, STUMP-TYPE, TITANIUM ALLOY

APPLICABLE DOCUMENT: NAS2205 THRU 2212

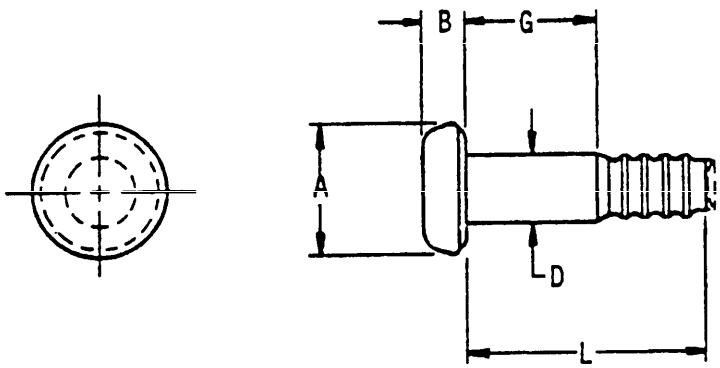

Material	Protective finish	Tensile strength (psi) min
Titanium alloy 6AL-4V	None	106,000

TABLE I. Pin-rivet, groove, configuration part numbers.

D Nom size	A Dia	B	Basic part number
.164	.270 .255	.072 .057	NAS2205
.190	.317 .302	.088 .073	NAS2206
.250	.411 .396	.113 .098	NAS2208
.312	.515 .500	.140 .125	NAS2210
.375	.628 .613	.167 .152	NAS2212

THIS DOCUMENT PROVIDED BY THE ABBOTT AEROSPACE
Downloaded from http://www.everyspec.com
TECHNICAL LIBRARY
ABBOTTAEROSPACE.COM

TABLE II. NAS2205, 2206, 2208, 2210 and 2212 Dash numbers.

G	Grip range		G	L					Grip dash number
	Min	Max		.164 Dia	.190 Dia	.250 Dia	.312 Dia	.375 Dia	
.062	.031	.094	.062	.262	.310	-	-	-	-01
.125	.095	.156	.125	.324	373	.456	.539	.635	-02
.188	.157	.219	.188	.387	.435	.519	.602	.697	-03
.250	.220	.281	.250	.449	.498	.581	.664	.760	-04
.312	.282	.344	.312	.512	.560	.644	.727	.822	-05
.375	.345	.406	.375	.574	.623	.706	.789	.885	-06
.438	.407	.469	.438	.637	.685	.769	.852	.947	-07
.500	.470	.531	.500	.699	.748	.831	.914	1.010	-08
.562	.532	.594	.562	.762	.810	.894	.976	1.072	-09
.625	.595	.656	.625	.824	.873	.956	1.039	1.135	-10
.688	.657	.719	.688	.887	.935	1.019	1.101	1.197	-11
.750	.720	.781	.750	.949	.998	1.081	1.164	1.260	-12
.812	.782	.844	.812	1.012	1.060	1.144	1.226	1.322	-13
.875	.845	.906	.875	1.074	1.123	1.206	1.289	1.385	-14
.938	.907	.969	.938	1.137	1.185	1.269	1.351	1.447	-15
1.000	.970	1.031	1.000	1.199	1.248	1.331	1.414	1.510	-16
1.062	1.032	1.094	1.062	1.262	1.310	1.394	1.476	1.572	-17
1.125	1.095	1.156	1.125	1.324	1.373	1.456	1.539	1.635	-18
1.188	1.157	1.219	1.188	1.387	1.435	1.519	1.602	1.697	-19
1.250	1.220	1.281	1.250	1.449	1.498	1.581	1.664	1.760	-20
1.312	1.282	1.344	1.312	1.512	1.560	1.644	1.727	1.822	-21
1.375	1.345	1.406	1.375	1.574	1.623	1.706	1.789	1.885	-22
1.438	1.407	1.469	1.438	1.637	1.685	1.769	1.852	1.947	-23
1.500	1.470	1.531	1.500	1.699	1.748	1.831	1.914	2.010	-24
1.562	1.532	1.594	1.562	1.762	1.810	1.894	1.976	2.072	-25
1.625	1.595	1.656	1.625	1.824	1.873	1.956	2.039	2.135	-26
1.688	1.657	1.719	1.688	1.887	1.935	2.019	2.101	2.197	-27
1.750	1.720	1.781	1.750	1.949	1.998	2.081	2.164	2.260	-28
1.812	1.782	1.844	1.812	2.012	2.060	2.144	2.226	2.322	-29
1.875	1.845	1.906	1.875	2.074	2.123	2.206	2.289	2.385	-30
1.938	1.907	1.969	1.938	2.137	2.185	2.269	2.351	2.447	-31
2.000	1.970	2.031	2.000	2.199	2.248	2.331	2.414	2.510	-32

NOTE: For collar selection, see NAS1080.

THIS DOCUMENT PROVIDED BY THE ABBOTT AEROSPACE
Downloaded from http://www.everyspec.com
TECHNICAL LIBRARY
ABBOTTAEROSPACE.COM

SECTION 413

PIN, SWAGE LOCKING, A-286 CRES, 100° HEAD (MS20426), TENSION, PULL-TYPE

APPLICABLE DOCUMENT: NAS6955 THRU 6962

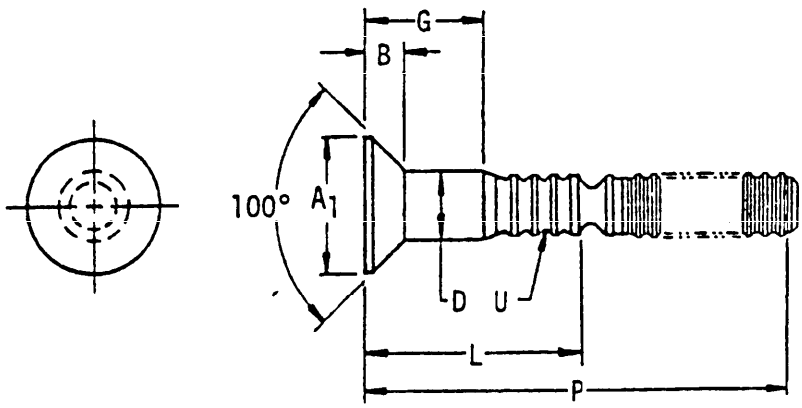

Material	Protective finish	Tensile strength (psi) min
Cres A-286 (AISI 660) per AMS 5735 or 5737	Passivate or cadmium plate or nickel-cadmium plating	77,900

TABLE I. Pin-rivet, groove, configuration part numbers.

D Nom size	A_1 Min dia	B Max	$U_{1/}$	Basic part number
.164	.263	.055	4	NAS6955
.190	.315	.072	4	NAS6956
.250	.428	.099	4	NAS6958
.312	.508	.109	5	NAS6960
.375	.629	.138	5	NAS6962

1/ Number of locking grooves.

TABLE II. NAS6955, 6956, 6958, 6960 and 6962 Dash numbers.

G	Grip range		.164 Dia		.190 Dia		.250 Dia		.312 Dia		.375 Dia		Grip dash number
	Min	Max	L	P	L	P	L	P	L	P	L	P	
.125	.095	.156	.313	1.50	.358	1.44	.437	1.88					02
.188	.157	.219	.376	1.62	.421	1.56	.499	2.00	.627	1.94	.734	2.12	03
.250	.220	.281	.438	1.75	.483	1.69	.562	2.12	.690	2.06	.797	2.25	04
.312	.282	.344	.501	1.88	.546	1.81	.624	2.25	.752	2.19	.859	2.38	05
.375	.345	.406	.563	2.00	.608	1.94	.687	2.38	.815	2.31	.922	2.50	06
.438	.407	.469	.626	2.12	.671	2.06	.749	2.50	.877	2.44	.984	2.62	07
.500	.470	.531	.688	2.25	.733	2.19	.812	2.62	.940	2.56	1.047	2.75	08
.562	.532	.594	.751	2.38	.796	2.31	.874	2.75	1.002	2.69	1.109	2.88	09
.625	.595	.656	.813	1.88	.858	2.44	.937	2.88	1.065	2.81	1.172	3.00	10
.688	.657	.719	.876	1.94	.921	2.56	.999	3.00	1.127	2.94	1.234	3.12	11
.750	.720	.781	.938	2.00	.983	2.69	1.062	3.12	1.190	3.06	1.297	3.25	12
.812	.782	.844	1.001	2.06	1.046	2.81	1.124	3.25	1.252	3.06	1.359	3.25	13
.875	.845	.906	1.063	2.12	1.108	2.94	1.187	3.25	1.315	3.06	1.422	3.25	14
.938	.907	.969	1.126	2.19	1.171	3.06	1.249	3.25	1.377	3.06	1.484	3.25	15
1.000	.970	1.031	1.188	2.25	1.233	3.19	1.312	3.25	1.440	3.06	1.547	3.25	16
1.062	1.032	1.094	1.251	2.31	1.296	3.19	1.374	3.25	1.502	3.06	1.609	3.25	17
1.125	1.095	1.156	1.313	2.38	1.358	3.19	1.437	3.25	1.565	3.06	1.672	3.25	18
1.188	1.157	1.219	1.376	2.44	1.421	3.19	1.499	3.25	1.627	3.06	1.734	3.25	19
1.250	1.220	1.281	1.438	2.50	1.483	3.19	1.562	3.25	1.690	3.06	1.797	3.25	20
1.312	1.282	1.344	1.501	2.56	1.546	3.19	1.624	3.25	1.752	3.06	1.859	3.25	21
1.375	1.345	1.406	1.563	2.62	1.608	3.19	1.687	3.25	1.815	3.06	1.922	3.25	22
1.438	1.407	1.469	-	-	1.671	3.19	1.749	3.25	1.877	3.06	1.984	3.25	23
1.500	1.470	1.531	-	-	1.733	3.19	1.812	3.25	1.940	3.06	2.047	3.25	24
1.562	1.532	1.594	-	-	1.796	3.19	1.874	3.25	2.002	3.12	2.109	3.31	25
1.625	1.595	1.656	-	-	1.858	3.19	1.937	3.25	2.065	3.19	2.172	3.38	26
1.688	1.657	1.719	-	-	1.921	3.19	1.999	3.31	2.127	3.25	2.234	3.44	27
1.750	1.720	1.781	-	-	1.983	3.19	2.062	3.38	2.190	3.31	2.297	3.50	28
1.812	1.782	1.844	-	-	2.046	3.19	2.124	3.44	2.252	3.38	2.359	3.56	29
1.875	1.845	1.906	-	-	2.108	3.19	2.187	3.50	2.315	3.44	2.422	3.62	30
1.938	1.907	1.969	-	-	2.171	3.19	2.249	3.56	2.377	3.50	2.484	3.69	31
2.000	1.970	2.031	-	-	2.233	3.19	2.312	3.62	2.440	3.56	2.547	3.75	32

NOTES: 1. For collar selection, see NAS1080.
2. Add "C" after basic part number for Cadmium plate.
3. Add "N" after basic part number for Nickel-Cadmium plate.

THIS DOCUMENT WAS DOWNLOADED FROM http://www.everyspec.com
TECHNICAL LIBRARY
ABBOTTAEROSPACE.COM

THIS DOCUMENT PROVIDED BY THE ABBOTT AEROSPACE
Downloaded from http://www.everyspec.com
TECHNICAL LIBRARY
ABBOTTAEROSPACE.COM

SECTION 414

PIN, SWAGE LOCKING, A-286 CRES, 100° HEAD (MS24694), TENSION, PULL-TYPE

APPLICABLE DOCUMENT: NAS6946 THRU 6952

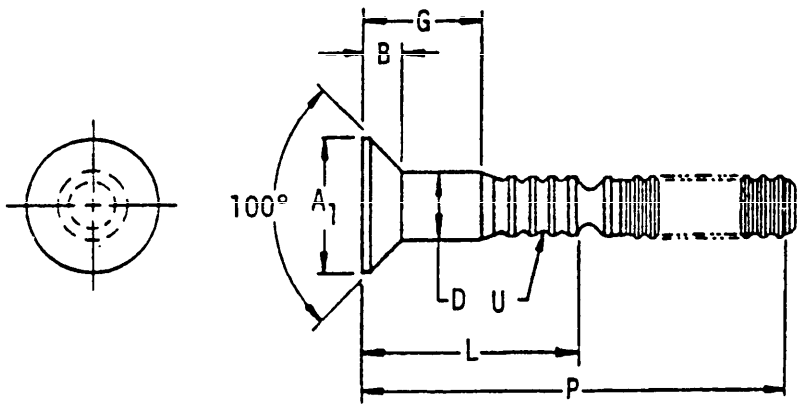

Material	Protective finish	Tensile strength (psi) min
Cres A-286 (AISI 660) per AMS 5735 or 5737	Passivate or cadmium plate or nickel cadmium plating	77,900

TABLE I. Pin-rivet, groove, configuration part numbers.

D Nom size	A_1 Min dia	B Max	U 1/	Basic part number
.190	.344	.084	4	NAS6946
.250	.455	.110	4	NAS6948
.312	.574	.138	5	NAS6950
.375	.693	.166	5	NAS6952

1/ Number of locking grooves.

TABLE II. NAS6946, 6948, 6950 and 6952 Dash numbers.

G	Grip range		.190 Dia		.250 Dia		.312 Dia		.375 Dia		Grip dash number
	Min	Max	L	P	L	P	L	P	L	P	
.125	.095	.156	.358	1.44	.437	1.88					02
.188	.157	.219	.421	1.56	.499	2.00	.627	1.94	.734	2.12	03
.250	.220	.281	.483	1.69	.562	2.12	.690	2.06	.797	2.25	04
.312	.282	.344	.546	1.81	.624	2.25	.752	2.19	.859	2.38	05
.375	.345	.406	.608	1.94	.687	2.38	.815	2.31	.922	2.50	06
.438	.407	.469	.671	2.06	.749	2.50	.877	2.44	.984	2.62	07
.500	.470	.531	.733	2.19	.812	2.62	.940	2.56	1.047	2.75	08
.562	.532	.594	.796	2.31	.874	2.75	1.002	2.69	1.109	2.88	09
.625	.595	.656	.858	2.44	.937	2.88	1.065	2.81	1.172	3.00	10
.688	.657	.719	.921	2.56	.999	3.00	1.127	2.94	1.234	3.12	11
.750	.720	.781	.983	2.69	1.062	3.12	1.190	3.06	1.297	3.25	12
.812	.782	.844	1.046	2.81	1.124	3.25	1.252	3.06	1.359	3.25	13
.875	.845	.906	1.108	2.94	1.187	3.25	1.315	3.06	1.422	3.25	14
.938	.907	.969	1.171	3.06	1.249	3.25	1.377	3.06	1.484	3.25	15
1.000	.970	1.031	1.233	3.19	1.312	3.25	1.440	3.06	1.547	3.25	16
1.062	1.032	1.094	1.296	3.19	1.374	3.25	1.502	3.06	1.609	3.25	17
1.125	1.095	1.156	1.358	3.19	1.437	3.25	1.565	3.06	1.672	3.25	18
1.188	1.157	1.219	1.421	3.19	1.499	3.25	1.627	3.06	1.734	3.25	19
1.250	1.220	1.281	1.483	3.19	1.562	3.25	1.690	3.06	1.797	3.25	20
1.312	1.282	1.344	1.546	3.19	1.624	3.25	1.752	3.06	1.859	3.25	21
1.375	1.345	1.406	1.608	3.19	1.687	3.25	1.815	3.06	1.922	3.25	22
1.438	1.407	1.469	1.671	3.19	1.749	3.25	1.877	3.06	1.984	3.25	23
1.500	1.470	1.531	1.733	3.19	1.812	3.25	1.940	3.06	2.047	3.25	24
1.562	1.532	1.594	1.796	3.19	1.874	3.25	2.002	3.12	2.109	3.31	25
1.625	1.595	1.656	1.858	3.19	1.937	3.25	2.065	3.19	2.172	3.38	26
1.688	1.657	1.719	1.921	3.19	1.999	3.31	2.127	3.25	2.234	3.44	27
1.750	1.720	1.781	1.983	3.19	2.062	3.38	2.190	3.31	2.297	3.50	28
1.812	1.782	1.844	2.046	3.19	2.124	3.44	2.252	3.38	2.359	3.56	29
1.875	1.845	1.906	2.108	3.19	2.187	3.50	2.315	3.44	2.422	3.62	30
1.938	1.907	1.969	2.171	3.19	2.249	3.56	2.377	3.50	2.484	3.69	31
2.000	1.970	2.031	2.233	3.19	2.312	3.62	2.440	3.56	2.547	3.75	32

NOTES: 1. For collar selection, see NAS1080.
2. Add "C" after basic part number for Cadmium plate.
3. Add "N" after basic part number for Nickel-Cadmium plate.

TECHNICAL LIBRARY
ABBOTTAEROSPACE.COM

THIS DOCUMENT PROVIDED BY THE ABBOTT AEROSPACE
Downloaded from http://www.everyspec.com
TECHNICAL LIBRARY
ABBOTTAEROSPACE.COM

SECTION 415

PIN, SWAGE LOCKING, A-286 CRES, 100° SHEAR HEAD, STUMP-TYPE

APPLICABLE DOCUMENT: NAS6974 THRU 6982

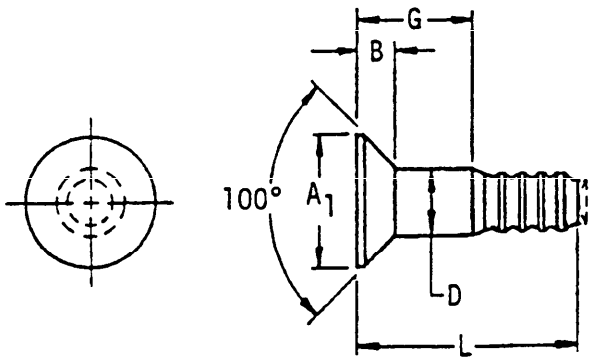

Material	Protective finish	Shear strength (psi) min
Cres A-286 (AISI 660) per AMS 5735 or 5737	Passivate or cadmium plate or nickel-cadmium plating	92,400

TABLE I. Pin-rivet, groove, configuration part numbers.

D Nom size	A_1 Min dia	B Max	Basic part number
.125	.180	.037	NAS6974
.156	.220	.043	NAS6975
.190	.262	.049	NAS6976
.250	.346	.064	NAS6978
.312	.417	.071	NAS6980
.375	.496	.082	NAS6982

THIS DOCUMENT PROVIDED BY THE ABBOTT AEROSPACE
Downloaded from http://www.everyspec.com
TECHNICAL LIBRARY
ABBOTTAEROSPACE.COM

TABLE II. NAS6974, 6975, 6976, 6978, 6980, and 6982 Dash numbers.

G	Grip range		L						Grip dash number
	Min	Max	.125 Dia	.156 Dia	.190 Dia	.250 Dia	.312 Dia	.375 Dia	
.062	1/	.062	.201	.236	-	-	-	-	01
.125	.063	.125	.263	.298	.323	.376	-	-	02
.188	.126	.188	.326	.361	.386	.439	.458	.501	03
.250	.189	.250	.388	.423	.448	.501	.520	.563	04
.312	.251	.312	.451	.486	.511	.564	.583	.626	05
.375	.313	.375	.513	.548	.574	.626	.645	.688	06
.438	.376	.438	.576	.611	.637	.689	.708	.751	07
.500	.439	.500	.638	.673	.699	.751	.770	.813	08
.562	.501	.562	.701	.736	.762	.814	.833	.876	09
.625	.563	.625	.763	.798	.824	.876	.895	.938	10
.688	.626	.688	.826	.861	.887	.939	.958	1.001	11
.750	.689	.750	.888	.923	.949	1.001	1.020	1.063	12
.812	.751	.812	.951	.986	1.012	1.064	1.083	1.126	13
.875	.813	.875	1.013	1.048	1.074	1.126	1.145	1.188	14
.938	.876	.938	1.076	1.111	1.137	1.189	1.208	1.251	15
1.000	.939	1.000	1.138	1.173	1.199	1.251	1.270	1.313	16
1.062	1.001	1.062	-	-	1.261	1.314	1.333	1.376	17
1.125	1.063	1.125	-	-	1.323	1.376	1.395	1.438	18
1.188	1.126	1.188	-	-	1.386	1.439	1.458	1.501	19
1.250	1.189	1.250	-	-	1.448	1.501	1.520	1.563	20
1.312	1.251	1.312	-	-	1.511	1.564	1.583	1.626	21
1.375	1.313	1.375	-	-	1.574	1.626	1.645	1.688	22
1.438	1.376	1.438	-	-	1.637	1.689	1.708	1.751	23
1.500	1.439	1.500	-	-	1.699	1.751	1.770	1.813	24
1.562	1.501	1.562	-	-	1.762	1.814	1.833	1.876	25
1.625	1.563	1.625	-	-	1.824	1.876	1.895	1.938	26
1.688	1.626	1.688	-	-	1.887	1.939	1.958	2.001	27
1.750	1.689	1.750	-	-	1.949	2.001	2.020	2.063	28
1.812	1.751	1.812	-	-	2.012	2.064	2.083	2.126	29
1.875	1.813	1.875	-	-	2.074	2.126	2.145	2.188	30
1.938	1.876	1.938	-	-	2.137	2.189	2.208	2.251	31
2.000	1.939	2.000	-	-	2.199	2.251	2.270	2.313	32

1/ Minimum grip for -01 varies with material to be fastened together.

NOTES: 1. For collar selection, see NAS1080.
2. Add "C" after basic part number for Cadmium plate.
3. Add "N" after basic part number for Nickel-Cadmium plate.

THIS DOCUMENT PROVIDED BY THE ABBOTT AEROSPACE
Downloaded from http://www.everyspec.com
TECHNICAL LIBRARY
ABBOTTAEROSPACE.COM

SECTION 416

PIN, SWAGE LOCKING, A-286 CRES, 100° SHEAR/TENSION HEAD, PULL-TYPE

APPLICABLE DOCUMENT: NAS 7004 THRU 7012

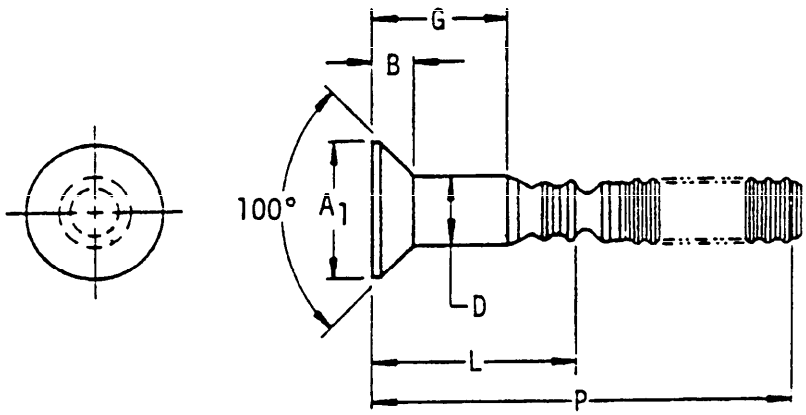

Material	Protective finish	Shear/ tension strength (psi) min
Cres A-286 (AISI 660) per AMS 5735 or 5737	Passivate or cadmium plate or nickel cadmium plating	70,500

TABLE I. Pin-rivet, groove, configuration part numbers.

D Nom size	A_1 Min dia	B Max	Basic part number
.125	.190	.041	NAS7004
.156	.240	.051	NAS7005
.190	.288	.060	NAS7006
.250	.379	.078	NAS7008
.312	.470	.095	NAS7010
.375	.561	.111	NAS7012

TABLE II. NAS7004, 7005, 7006, 7008, 7010 and 7012 Dash numbers.

G	Grip range		.125 Dia		.156 Dia		.190 Dia		.250 Dia		.312 Dia		.375 Dia		Grip dash number
	Min	Max	L	P	L	P	L	P	L	P	L	P	L	P	
.125	.062	.125	.299	1.34	.303	1.56	.321	1.56	-	-	-	-	-	-	02
.188	.126	.188	.362	1.46	.365	1.68	.383	1.68	.418	1.87	-	-	-	-	03
.250	.189	.250	.424	1.59	.428	1.81	.446	1.81	.481	2.00	.520	2.41	.553	2.57	04
.312	.251	.312	.487	1.71	.490	1.93	.508	1.93	.543	2.12	.582	2.54	.615	2.70	05
.375	.313	.375	.549	1.84	.553	2.06	.571	2.06	.606	2.25	.645	2.66	.678	2.82	06
.438	.376	.438	.612	1.96	.615	2.18	.633	2.18	.668	2.37	.707	2.79	.740	2.95	07
.500	.439	.500	.674	2.09	.678	2.31	.696	2.31	.731	2.50	.770	2.91	.803	3.07	08
.562	.501	.562	.737	2.21	.740	2.43	.758	2.43	.793	2.62	.832	3.04	.865	3.20	09
.625	.563	.625	.799	2.34	.803	2.56	.821	2.56	.856	2.75	.895	3.16	.928	3.32	10
.688	.626	.688	.862	2.46	.865	2.68	.883	2.68	.918	2.87	.957	3.29	.990	3.45	11
.750	.689	.750	.924	2.59	.928	2.81	.946	2.81	.981	3.00	1.020	3.41	1.053	3.57	12
.812	.751	.812	-	-	.990	2.81	1.008	2.93	1.043	3.12	1.082	3.54	1.115	3.70	13
.875	.813	.875	-	-	1.053	2.81	1.071	3.06	1.106	3.25	1.145	3.66	1.178	3.76	14
.938	.876	.938	-	-	1.115	2.81	1.133	3.18	1.168	3.37	1.207	3.73	1.240	3.76	15
1.000	.939	1.000	-	-	1.178	2.81	1.196	3.31	1.231	3.50	1.270	3.73	1.303	3.76	16
1.062	1.001	1.062	-	-	-	-	1.258	3.31	1.293	3.62	1.332	3.73	1.365	3.76	17
1.125	1.063	1.125	-	-	-	-	1.321	3.31	1.356	3.75	1.395	3.73	1.428	3.76	18
1.188	1.126	1.188	-	-	-	-	1.383	3.31	1.418	3.75	1.457	3.73	1.490	3.76	19
1.250	1.189	1.250	-	-	-	-	1.446	3.31	1.481	3.75	1.520	3.73	1.553	3.76	20
1.312	1.251	1.312	-	-	-	-	1.508	3.31	1.543	3.75	1.582	3.73	1.615	3.76	21
1.375	1.313	1.375	-	-	-	-	1.571	3.31	1.606	3.75	1.645	3.73	1.678	3.76	22
1.438	1.376	1.438	-	-	-	-	1.633	3.31	1.668	3.75	1.707	3.73	1.740	3.76	23
1.500	1.439	1.500	-	-	-	-	1.696	3.31	1.731	3.75	1.770	3.73	1.803	3.76	24
1.562	1.501	1.562	-	-	-	-	1.758	3.31	1.793	3.75	1.832	3.73	1.865	3.76	25
1.625	1.563	1.625	-	-	-	-	1.821	3.31	1.856	3.75	1.895	3.73	1.928	3.76	26
1.688	1.626	1.688	-	-	-	-	1.883	3.31	1.918	3.75	1.957	3.73	1.990	3.76	27
1.750	1.689	1.750	-	-	-	-	1.946	3.31	1.981	3.75	2.020	3.73	2.053	3.82	28
1.812	1.751	1.812	-	-	-	-	2.008	3.31	2.043	3.75	2.082	3.73	2.115	3.89	29
1.875	1.813	1.875	-	-	-	-	2.071	3.31	2.106	3.75	2.145	3.79	2.178	3.95	30
1.938	1.876	1.938	-	-	-	-	2.133	3.31	2.168	3.75	2.207	3.85	2.240	4.01	31
2.000	1.939	2.000	-	-	-	-	2.196	3.31	2.231	3.75	2.270	3.91	2.303	4.07	32

NOTES: 1. For collar selection, see NAS1080.
2. Add "C" after basic part number for Cadmium plate.
3. Add "N" after basic part number for Nickel-Cadmium plate.

THIS DOCUMENT IS BEING PROVIDED BY ABBOTT AEROSPACE
Downloaded from http://www.everyspec.com
TECHNICAL LIBRARY
ABBOTTAEROSPACE.COM

THIS DOCUMENT PROVIDED BY THE ABBOTT AEROSPACE
Downloaded from http://www.everyspec.com
TECHNICAL LIBRARY
ABBOTTAEROSPACE.COM

SECTION 417

PIN, SWAGE LOCKING, A-286 CRES, PROTRUDING HEAD, SHEAR/TENSION, PULL-TYPE

APPLICABLE DOCUMENT: NAS7014 THRU 7022

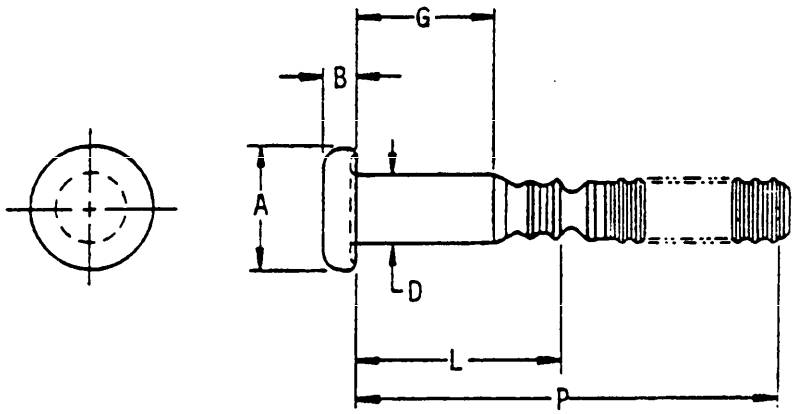

Material	Protective finish	Shear/ tension strength (psi) min
Cres A-286 (AISI 660) per AMS 5735 or 5737	Passivate or cadmium plate or nickel cadmium plating	70,500

TABLE I. Pin-rivet, groove, configuration part numbers.

D Nom size	A Dia	B	Basic part number
.125	.193 .177	.065 .059	NAS7014
.156	.238 .219	.077 .070	NAS7015
.190	.288 .268	.086 .079	NAS7016
.250	.380 .354	.111 .104	NAS7018
.312	.475 .443	.137 .130	NAS7020
.375	.569 .533	.164 .157	NAS7022

TABLE II. NAS7014, 7015, 7016, 7018, 7020 and 7022 Dash numbers.

G	Grip range		.125 Dia		.156 Dia		.190 Dia		.250 Dia		.312 Dia		.375 Dia		Grip dash number
	Min	Max	L	P	L	P	L	P	L	P	L	P	L	P	
.062	.020	.062	.237	1.21	.240	1.43	-	-	-	-	-	-	-	-	01
.125	.063	.125	.299	1.34	.303	1.56	.321	1.56	.356	1.75	.395	2.16	.428	2.32	02
.188	.126	.188	.362	1.46	.365	1.68	.383	1.68	.418	1.87	.457	2.29	.490	2.45	03
.250	.189	.250	.424	1.59	.428	1.81	.446	1.81	.481	2.00	.520	2.41	.553	2.57	04
.312	.251	.312	.487	1.71	.490	1.93	.508	1.93	.543	2.12	.582	2.54	.615	2.70	05
.375	.313	.375	.549	1.84	.553	2.06	.571	2.06	.606	2.25	.645	2.66	.678	2.82	06
.438	.376	.438	.612	1.96	.615	2.18	.633	2.18	.668	2.37	.707	2.79	.740	2.95	07
.500	.439	.500	.674	2.09	.678	2.31	.696	2.31	.731	2.50	.770	2.91	.803	3.07	08
.562	.501	.562	.737	2.21	.740	2.43	.758	2.43	.793	2.62	.832	3.04	.865	3.20	09
.625	.563	.625	.799	2.34	.803	2.56	.821	2.56	.856	2.75	.895	3.16	.928	3.32	10
.688	.626	.688	.862	2.46	.865	2.68	.883	2.68	.918	2.87	.957	3.29	.990	3.45	11
.750	.689	.750	.924	2.59	.928	2.81	.946	2.81	.981	3.00	1.020	3.41	1.053	3.57	12
.812	.751	.812	-	-	.990	2.81	1.008	2.93	1.043	3.12	1.082	3.54	1.115	3.70	13
.875	.813	.875	-	-	1.053	2.81	1.071	3.06	1.106	3.25	1.145	3.66	1.178	3.76	14
.938	.876	.938	-	-	1.115	2.81	1.133	3.18	1.168	3.37	1.207	3.73	1.240	3.76	15
1.000	.939	1.000	-	-	1.178	2.81	1.196	3.31	1.231	3.50	1.270	3.73	1.303	3.76	16
1.062	1.001	1.062	-	-	-	-	1.258	3.31	1.293	3.62	1.332	3.73	1.365	3.76	17
1.125	1.063	1.125	-	-	-	-	1.321	3.31	1.356	3.75	1.395	3.73	1.428	3.76	18
1.188	1.126	1.188	-	-	-	-	1.383	3.31	1.418	3.75	1.457	3.73	1.490	3.76	19
1.250	1.189	1.250	-	-	-	-	1.446	3.31	1.481	3.75	1.520	3.73	1.553	3.76	20
1.312	1.251	1.312	-	-	-	-	1.508	3.31	1.543	3.75	1.582	3.73	1.615	3.76	21
1.375	1.313	1.375	-	-	-	-	1.571	3.31	1.606	3.75	1.645	3.73	1.678	3.76	22
1.438	1.376	1.438	-	-	-	-	1.633	3.31	1.668	3.75	1.707	3.73	1.740	3.76	23
1.500	1.439	1.500	-	-	-	-	1.696	3.31	1.731	3.75	1.770	3.73	1.803	3.76	24
1.562	1.501	1.562	-	-	-	-	1.758	3.31	1.793	3.75	1.832	3.73	1.865	3.76	25
1.625	1.563	1.625	-	-	-	-	1.821	3.31	1.856	3.75	1.895	3.73	1.928	3.76	26
1.688	1.626	1.688	-	-	-	-	1.883	3.31	1.918	3.75	1.957	3.73	1.990	3.76	27
1.750	1.689	1.750	-	-	-	-	1.946	3.31	1.981	3.75	2.020	3.73	2.053	3.82	28
1.812	1.751	1.812	-	-	-	-	2.008	3.31	2.043	3.75	2.082	3.73	2.115	3.89	29
1.875	1.813	1.875	-	-	-	-	2.071	3.31	2.106	3.75	2.145	3.79	2.178	3.95	30
1.938	1.876	1.938	-	-	-	-	2.133	3.31	2.168	3.75	2.207	3.85	2.240	4.01	31
2.000	1.939	2.000	-	-	-	-	2.196	3.31	2.231	3.75	2.270	3.91	2.303	4.07	32

NOTES: 1. For collar selection, see NAS1080.
2. Add "C" after basic part number for Cadmium plate.
3. Add "N" after basic part number for Nickel-Cadmium plate.

TECHNICAL LIBRARY
ABBOTTAEROSPACE.COM

THIS DOCUMENT PROVIDED BY THE ABBOTT AEROSPACE
Downloaded from http://www.everyspec.com
TECHNICAL LIBRARY
ABBOTTAEROSPACE.COM

SECTION 418

PIN, SWAGE LOCKING, A-286 CRES, PROTRUDING HEAD, SHEAR, STUMP-TYPE

APPLICABLE DOCUMENT: NAS6984 THRU 6992

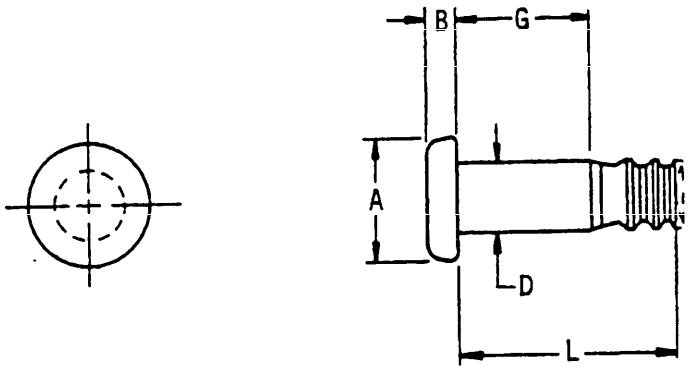

Material	Protective finish	Shear strength (psi) min
Cres A286 (AISI 660) per AMS 5735 or 5737	Passivate or cadmium plate or nickel cadmium plating	92,400

TABLE I. Pin-rivet, groove, configuration part numbers.

D Nom size	A Dia	B	Basic part number
.125	.195 .181	.040 .028	NAS6984
.156	.249 .235	.048 .036	NAS6985
.190	.302 .288	.056 .044	NAS6986
.250	.377 .363	.070 .058	NAS6988
.312	.471 .455	.079 .067	NAS6990
.375	.565 .549	.089 .077	NAS6992

THIS DOCUMENT PROVIDED BY THE ABBOTT AEROSPACE
Downloaded from http://www.everyspec.com
TECHNICAL LIBRARY
ABBOTTAEROSPACE.COM

TABLE II. NAS6984, 6985, 6986, 6988, 6990 and 6992 Dash numbers.

G	Grip range		L						Grip dash number
	Min	Max	.125 Dia	.156 Dia	.190 Dia	.250 Dia	.312 Dia	.375 Dia	
.062	-	.062	.201	.236	.261	-	-	-	01
.125	.063	.125	.263	.298	.323	.376	.395	.438	02
.188	.126	.188	.326	.361	.386	.439	.458	.501	03
.250	.189	.250	.388	.423	.448	.501	.520	.563	04
.312	.251	.312	.451	.486	.511	.564	.583	.626	05
.375	.313	.375	.513	.548	.574	.626	.645	.688	06
.438	.376	.438	.576	.611	.637	.689	.708	.751	07
.500	.439	.500	.638	.673	.699	.751	.770	.813	08
.562	.501	.562	.701	.736	.762	.814	.833	.876	09
.625	.563	.625	.763	.798	.824	.876	.895	.938	10
.688	.626	.688	.826	.861	.887	.939	.958	1.001	11
.750	.689	.750	.888	.923	.949	1.001	1.020	1.063	12
.812	.751	.812	.951	.986	1.012	1.064	1.083	1.126	13
.875	.813	.875	1.013	1.048	1.074	1.126	1.145	1.188	14
.938	.876	.938	1.076	1.111	1.137	1.189	1.208	1.251	15
1.000	.939	1.000	1.138	1.173	1.199	1.251	1.270	1.313	16
1.062	1.001	1.062	-	-	1.261	1.314	1.333	1.376	17
1.125	1.063	1.125	-	-	1.323	1.376	1.395	1.438	18
1.188	1.126	1.188	-	-	1.386	1.439	1.458	1.501	19
1.250	1.189	1.250	-	-	1.448	1.501	1.520	1.563	20
1.312	1.251	1.312	-	-	1.511	1.564	1.583	1.626	21
1.375	1.313	1.375	-	-	1.574	1.626	1.645	1.688	22
1.438	1.376	1.438	-	-	1.637	1.689	1.708	1.751	23
1.500	1.439	1.500	-	-	1.699	1.751	1.770	1.813	24
1.562	1.501	1.562	-	-	1.762	1.814	1.833	1.876	25
1.625	1.563	1.625	-	-	1.824	1.876	1.895	1.938	26
1.688	1.626	1.688	-	-	1.887	1.939	1.958	2.001	27
1.750	1.689	1.750	-	-	1.949	2.001	2.020	2.063	28
1.812	1.751	1.812	-	-	2.012	2.064	2.083	2.126	29
1.875	1.813	1.875	-	-	2.074	2.126	2.145	2.188	30
1.938	1.876	1.938	-	-	2.137	2.189	2.208	2.251	31
2.000	1.939	2.000	-	-	2.199	2.251	2.270	2.313	32

NOTES: 1. For collar selection, see NAS 1080.
2. Add "C" after basic part number for Cadmium plate.
3. Add "N" after basic part number for Nickel-Cadmium plate.

THIS DOCUMENT PROVIDED BY THE ABBOTT AEROSPACE
Downloaded from http://www.everyspec.com
TECHNICAL LIBRARY
ABBOTTAEROSPACE.COM

SECTION 419

PIN, SWAGE LOCKING, A-286 CRES, PROTRUDING HEAD, TENSION, PULL-TYPE

APPLICABLE DOCUMENT: NAS6965 THRU 6972

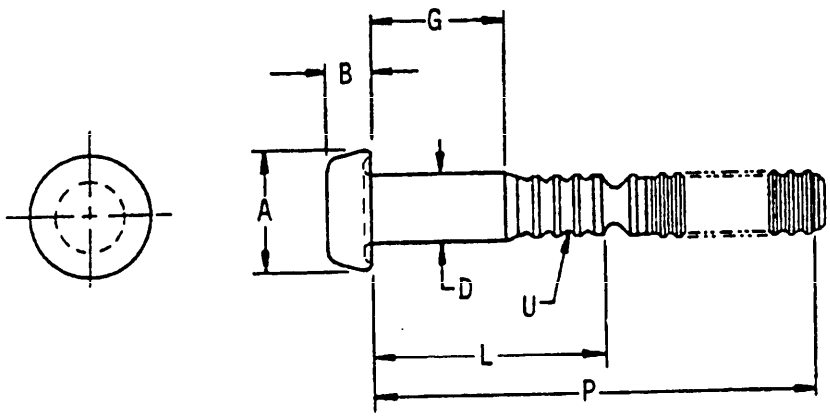

Material	Protective finish	Tensile strength (psi) min
Cres A-286 (AISI 660) per AMS 5735 or 5737	Passivate or cadmium plate or nickel-cadmium plating	77,900

TABLE I. Pin-rivet, groove, configuration part numbers.

D Nom size	A Dia	B	U 1/	Basic part number
.164	.282 .258	.095 .085	4	NAS6965
.190	.327 .297	.111 .099	4	NAS6966
.250	.430 .390	.147 .128	4	NAS6968
.312	.535 .485	.184 .158	5	NAS6970
.375	.655 .595	.224 .194	5	NAS6972

1/ Number of locking grooves.

TABLE II. NAS6965, 6966, 6968, 6970 and 6972 Dash numbers.

G	Grip range		.164 Dia		.190 Dia		.250 Dia		.312 Dia		.375 Dia		Grip dash number
	Min	Max	L	P	L	P	L	P	L	P	L	P	
.062	.031	.094	.251	1.38	.296	1.31	-	-	-	-	-	-	01
.125	.095	.156	.313	1.50	.358	1.44	.437	1.88	.565	1.81	.672	2.00	02
.188	.157	.219	.376	1.62	.421	1.56	.499	2.00	.627	1.94	.734	2.12	03
.250	.220	.281	.438	1.75	.483	1.69	.562	2.12	.690	2.06	.797	2.25	04
.312	.282	.344	.501	1.88	.546	1.81	.624	2.25	.752	2.19	.859	2.38	05
.375	.345	.406	.563	2.00	.608	1.94	.687	2.38	.815	2.31	.922	2.50	06
.438	.407	.469	.626	2.12	.671	2.06	.749	2.50	.877	2.44	.984	2.62	07
.500	.470	.531	.688	2.25	.733	2.19	.812	2.62	.940	2.56	1.047	2.75	08
.562	.532	.594	.751	2.38	.796	2.31	.874	2.75	1.002	2.69	1.109	2.88	09
.625	.595	.656	.813	1.88	.858	2.44	.937	2.88	1.065	2.81	1.172	3.00	10
.688	.657	.719	.876	1.94	.921	2.56	.999	3.00	1.127	2.94	1.234	3.12	11
.750	.720	.781	.938	2.00	.983	2.69	1.062	3.12	1.190	3.06	1.297	3.25	12
.812	.782	.844	1.001	2.06	1.046	2.81	1.124	3.25	1.252	3.06	1.359	3.25	13
.875	.845	.906	1.063	2.12	1.108	2.94	1.187	3.25	1.315	3.06	1.422	3.25	14
.938	.907	.969	1.126	2.19	1.171	3.06	1.249	3.25	1.377	3.06	1.484	3.25	15
1.000	.970	1.031	1.188	2.25	1.233	3.19	1.312	3.25	1.440	3.06	1.547	3.25	16
1.062	1.032	1.094	1.251	2.31	1.296	3.19	1.374	3.25	1.502	3.06	1.609	3.25	17
1.125	1.095	1.156	1.313	2.38	1.358	3.19	1.437	3.25	1.565	3.06	1.672	3.25	18
1.188	1.157	1.219	1.376	2.44	1.421	3.19	1.499	3.25	1.627	3.06	1.734	3.25	19
1.250	1.220	1.281	1.438	2.50	1.483	3.19	1.562	3.25	1.690	3.06	1.797	3.25	20
1.312	1.282	1.344	1.501	2.56	1.546	3.19	1.624	3.25	1.752	3.06	1.859	3.25	21
1.375	1.345	1.406	1.563	2.62	1.608	3.19	1.687	3.25	1.815	3.06	1.922	3.25	22
1.438	1.407	1.469	-	-	1.671	3.19	1.749	3.25	1.877	3.06	1.984	3.25	23
1.500	1.470	1.531	-	-	1.733	3.19	1.812	3.25	1.940	3.06	2.047	3.25	24
1.562	1.532	1.594	-	-	1.796	3.19	1.874	3.25	2.002	3.12	2.109	3.31	25
1.625	1.595	1.656	-	-	1.858	3.19	1.937	3.25	2.065	3.19	2.172	3.38	26
1.688	1.657	1.719	-	-	1.921	3.19	1.999	3.31	2.127	3.25	2.234	3.44	27
1.750	1.720	1.781	-	-	1.983	3.19	2.062	3.38	2.190	3.31	2.297	3.50	28
1.812	1.782	1.844	-	-	2.046	3.19	2.124	3.44	2.252	3.38	2.359	3.56	29
1.875	1.845	1.906	-	-	2.108	3.19	2.187	3.50	2.315	3.44	2.422	3.62	30
1.938	1.907	1.969	-	-	2.171	3.19	2.249	3.56	2.377	3.50	2.484	3.69	31
2.000	1.970	2.031	-	-	2.233	3.19	2.312	3.62	2.440	3.56	2.547	3.75	32

NOTES: 1. For collar selection, see NAS1080.
2. Add "C" after basic part number for Cadmium plate.
3. Add "N" after basic part number for Nickel-Cadmium plate.

THIS DOCUMENT WAS DOWNLOADED FROM http://www.everyspec.com
TECHNICAL LIBRARY
ABBOTTAEROSPACE.COM

THIS DOCUMENT PROVIDED BY THE ABBOTT AEROSPACE
Downloaded from http://www.everyspec.com
TECHNICAL LIBRARY
ABBOTTAEROSPACE.COM

SECTION 420

PIN, SWAGE LOCKING, 108 KSI STEEL, 100° SHEAR/TENSION HEAD, PULL-TYPE

APPLICABLE DOCUMENT: NAS7024 THRU 7032

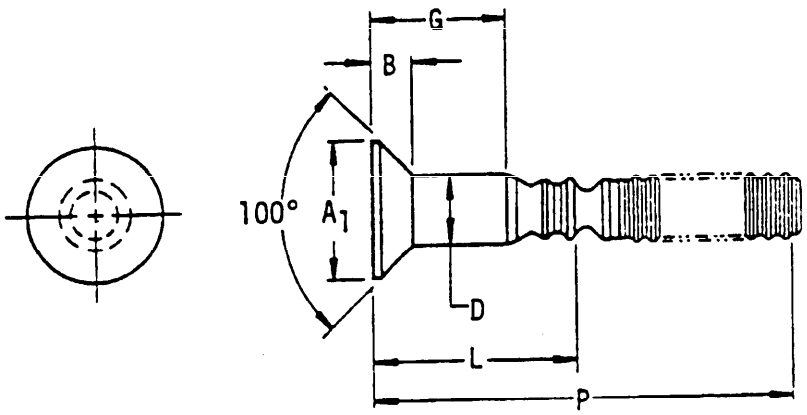

Material	Protective finish	Shear/ tension strength (psi) min
Alloy steel (AISI-8740)	Cadmium plate or nickel cadmium plating	42,300

TABLE I. Pin-rivet, groove, configuration part numbers.

D Nom size	A_1 Min dia	B Max	Basic part number
.125	.190	.041	NAS7024
.156	.240	.051	NAS7025
.190	.289	.060	NAS7026
.250	.379	.078	NAS7028
.312	.471	.095	NAS7030
.375	.562	.111	NAS7032

TABLE II. NAS7024, 7025, 7026, 7028, 7030 and 7032 Dash numbers.

G	Grip range		.125 Dia		.156 Dia		.190 Dia		.250 Dia		.312 Dia		.375 Dia		Grip dash number
	Min	Max	L	P	L	P	L	P	L	P	L	P	L	P	
.125	.062	.125	.284	1.34	.303	1.56	.321	1.56	-	-	-	-	-	-	02
.188	.126	.188	.347	1.46	.365	1.68	.383	1.68	.418	1.87	-	-	-	-	03
.250	.189	.250	.409	1.59	.428	1.81	.446	1.81	.481	2.00	.520	2.41	.553	2.57	04
.312	.251	.312	.472	1.71	.490	1.93	.508	1.93	.543	2.12	.582	2.54	.615	2.70	05
.375	.313	.375	.534	1.84	.553	2.06	.571	2.06	.606	2.25	.645	2.66	.678	2.82	06
.438	.376	.438	.597	1.96	.615	2.18	.633	2.18	.668	2.37	.707	2.79	.740	2.95	07
.500	.439	.500	.659	2.09	.678	2.31	.696	2.31	.731	2.50	.770	2.91	.803	3.07	08
.562	.501	.562	.722	2.21	.740	2.43	.758	2.43	.793	2.62	.832	3.04	.865	3.20	09
.625	.563	.625	.784	2.34	.803	2.56	.821	2.56	.856	2.75	.895	3.16	.928	3.32	10
.688	.626	.688	.847	2.46	.865	2.68	.883	2.68	.918	2.87	.957	3.29	.990	3.45	11
.750	.689	.750	.909	2.59	.928	2.81	.946	2.81	.981	3.00	1.020	3.41	1.053	3.57	12
.812	.751	.812	"	-	.990	2.81	1.008	2.93	1.043	3.12	1.082	3.54	1.115	3.70	13
.875	.813	.875	"	-	1.053	2.81	1.071	3.06	1.106	3.25	1.145	3.66	1.178	3.76	14
.938	.876	.938	"	-	1.115	2.81	1.133	3.18	1.168	3.37	1.207	3.73	1.240	3.76	15
1.000	.939	1.000	"	-	1.178	2.81	1.196	3.31	1.231	3.50	1.270	3.73	1.303	3.76	16
1.062	1.001	1.062	"	-	-	-	1.258	3.31	1.293	3.62	1.332	3.73	1.365	3.76	17
1.125	1.063	1.125	"	-	-	-	1.321	3.31	1.356	3.75	1.395	3.73	1.428	3.76	18
1.188	1.126	1.188	"	-	-	-	1.383	3.31	1.418	3.75	1.457	3.73	1.490	3.76	19
1.250	1.189	1.250	"	-	-	-	1.446	3.31	1.481	3.75	1.520	3.73	1.553	3.76	20
1.312	1.251	1.312	"	-	-	-	1.508	3.31	1.543	3.75	1.582	3.73	1.615	3.76	21
1.375	1.313	1.375	"	-	-	-	1.571	3.31	1.606	3.75	1.645	3.73	1.678	3.76	22
1.438	1.376	1.438	"	-	-	-	1.633	3.31	1.668	3.75	1.707	3.73	1.740	3.76	23
1.500	1.439	1.500	"	-	-	-	1.696	3.31	1.731	3.75	1.770	3.73	1.803	3.76	24
1.562	1.501	1.562	"	-	-	-	1.758	3.31	1.793	3.75	1.832	3.73	1.865	3.76	25
1.625	1.563	1.625	"	-	-	-	1.821	3.31	1.856	3.75	1.895	3.73	1.928	3.76	26
1.688	1.626	1.688	"	-	-	-	1.883	3.31	1.918	3.75	1.957	3.73	1.990	3.76	27
1.750	1.689	1.750	"	-	-	-	1.946	3.31	1.981	3.75	2.020	3.73	2.053	3.82	28
1.812	1.751	1.812	"	-	-	-	2.008	3.31	2.043	3.75	2.082	3.73	2.115	3.89	29
1.875	1.813	1.875	"	-	-	-	2.071	3.31	2.106	3.75	2.145	3.79	2.178	3.95	30
1.938	1.876	1.938	"	-	-	-	2.133	3.31	2.168	3.75	2.207	3.85	2.240	4.01	31
2.000	1.939	2.000	"	-	-	-	2.196	3.31	2.231	3.75	2.270	3.91	2.303	4.07	32

NOTES: 1. For collar selection, see NAS1080.
2. Add "N" after basic part number for Nickel-Cadmium plate.

THIS DOCUMENT PROVIDED BY ABBOTT AEROSPACE
Downloaded from http://www.everyspec.com
TECHNICAL LIBRARY
ABBOTTAEROSPACE.COM

THIS DOCUMENT PROVIDED BY THE ABBOTT AEROSPACE
Downloaded from http://www.everyspec.com
TECHNICAL LIBRARY
ABBOTTAEROSPACE.COM

SECTION 421

PIN, SWAGE LOCKING, 108 KSI STEEL, PROTRUDING HEAD, SHEAR/TENSION, PULL-TYPE

APPLICABLE DOCUMENT: NAS7034 THRU 7042

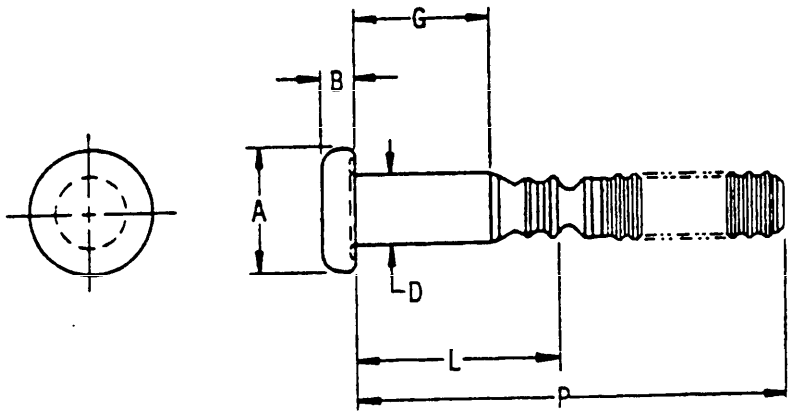

Material	Protective finish	Shear/ tension strength (psi) min
Alloy steel (AISI 8740)	Cadmium plate or nickel cadmium plating	42,300

TABLE I. Pin-rivet, groove, configuration part numbers.

D Nom size	A Dia	B	Basic part number
.125	.193 .177	.065 .059	NAS7034
.156	.238 .219	.077 .070	NAS7035
.190	.288 .268	.086 .079	NAS7036
.250	.380 .354	.111 .104	NAS7038
.312	.475 .443	.137 .130	NAS7040
.375	.569 .533	.164 .157	NAS7042

TABLE II. NAS7034, 7035, 7036, 7038, 7040 and 7042 Dash numbers.

G	Grip range		.125 Dia		.156 Dia		.190 Dia		.250 Dia		.312 Dia		.375 Dia		Grip dash number
	Min	Max	L	P	L	P	L	P	L	P	L	P	L	P	
.062	.020	.062	.222	1.21	.240	1.43	-	-	-	-	-	-	-	-	01
.125	.063	.125	.284	1.34	.303	1.56	.321	1.56	.356	1.75	.395	2.16	.428	2.32	02
.188	.126	.188	.347	1.46	.365	1.68	.383	1.68	.418	1.87	.457	2.29	.490	2.45	03
.250	.189	.250	.409	1.59	.428	1.81	.446	1.81	.481	2.00	.520	2.41	.553	2.57	04
.312	.251	.312	.472	1.71	.490	1.93	.508	1.93	.543	2.12	.582	2.54	.615	2.70	05
.375	.313	.375	.534	1.84	.553	2.06	.571	2.06	.606	2.25	.645	2.66	.678	2.82	06
.438	.376	.438	.597	1.96	.615	2.18	.633	2.18	.668	2.37	.707	2.79	.740	2.95	07
.500	.439	.500	.659	2.09	.678	2.31	.696	2.31	.731	2.50	.770	2.91	.803	3.07	08
.562	.501	.562	.722	2.21	.740	2.43	.758	2.43	.793	2.62	.832	3.04	.865	3.20	09
.625	.563	.625	.784	2.34	.803	2.56	.821	2.56	.856	2.75	.895	3.16	.928	3.32	10
.688	.626	.688	.847	2.46	.865	2.68	.883	2.68	.918	2.87	.957	3.29	.990	3.45	11
.750	.689	.750	.909	2.59	.928	2.81	.946	2.81	.981	3.00	1.020	3.41	1.053	3.57	12
.812	.751	.812	-	-	.990	2.81	1.008	2.93	1.043	3.12	1.082	3.54	1.115	3.70	13
.875	.813	.875	-	-	1.053	2.81	1.071	3.06	1.106	3.25	1.145	3.66	1.178	3.76	14
.938	.876	.938	-	-	1.115	2.81	1.133	3.18	1.168	3.37	1.207	3.73	1.240	3.76	15
1.000	.939	1.000	-	-	1.178	2.81	1.196	3.31	1.231	3.50	1.270	3.73	1.303	3.76	16
1.062	1.001	1.062	-	-	-	-	1.258	3.31	1.293	3.62	1.332	3.73	1.365	3.76	17
1.125	1.063	1.125	-	-	-	-	1.321	3.31	1.356	3.75	1.395	3.73	1.428	3.76	18
1.188	1.126	1.188	-	-	-	-	1.383	3.31	1.418	3.75	1.457	3.73	1.490	3.76	19
1.250	1.189	1.250	-	-	-	-	1.446	3.31	1.481	3.75	1.520	3.73	1.553	3.76	20
1.312	1.251	1.312	-	-	-	-	1.508	3.31	1.543	3.75	1.582	3.73	1.615	3.76	21
1.375	1.313	1.375	-	-	-	-	1.571	3.31	1.606	3.75	1.645	3.73	1.678	3.76	22
1.438	1.376	1.438	-	-	-	-	1.633	3.31	1.668	3.75	1.707	3.73	1.740	3.76	23
1.500	1.439	1.500	-	-	-	-	1.696	3.31	1.731	3.75	1.770	3.73	1.803	3.76	24
1.562	1.501	1.562	-	-	-	-	1.758	3.31	1.793	3.75	1.832	3.73	1.865	3.76	25
1.625	1.563	1.625	-	-	-	-	1.821	3.31	1.856	3.75	1.895	3.73	1.928	3.76	26
1.688	1.626	1.688	-	-	-	-	1.883	3.31	1.918	3.75	1.957	3.73	1.990	3.76	27
1.750	1.689	1.750	-	-	-	-	1.946	3.31	1.981	3.75	2.020	3.73	2.053	3.82	28
1.812	1.751	1.812	-	-	-	-	2.008	3.31	2.043	3.75	2.082	3.73	2.115	3.89	29
1.875	1.813	1.875	-	-	-	-	2.071	3.31	2.106	3.75	2.145	3.79	2.178	3.95	30
1.938	1.876	1.938	-	-	-	-	2.133	3.31	2.168	3.75	2.207	3.85	2.240	4.01	31
2.000	1.939	2.000	-	-	-	-	2.196	3.31	2.231	3.75	2.270	3.91	2.303	4.07	32

NOTES: 1. For collar selection, see NAS1080.
2. Add "N" after basic part number for Nickel-Cadmium plate.

THIS DOCUMENT IS ON THE PAGE
TECHNICAL LIBRARY
ABBOTTAEROSPACE.COM
Downloaded from http://www.everyspec.com

THIS DOCUMENT PROVIDED BY THE ABBOTT AEROSPACE
Downloaded from http://www.everyspec.com
TECHNICAL LIBRARY
ABBOTTAEROSPACE.COM

SECTION 422

PIN, SWAGE LOCKING, ALUMINUM ALLOY, 100° HEAD (MS20426), TENSION, PULL-TYPE

APPLICABLE DOCUMENT: NAS1535 THRU 1542

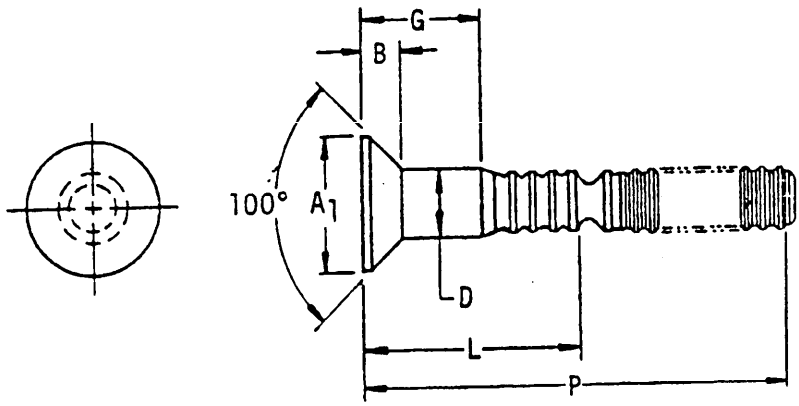

Material	Protective finish	Tensile strength (psi) min
Aluminum alloy 7075	Anodize or chemical surface treatment	42,100

TABLE I. Pin-rivet, groove, configuration.

Nom size	A_1 Min dia	B Max	Basic part number
.164	.263	.055	NAS1535
.190	.316	.071	NAS1536
.250	.428	.098	NAS1538

TABLE II. NAS1535, 1536 and 1538 Dash numbers.

G	Grip range		.164 Dia		.190 Dia		.250 Dia		Grip dash number
	Min	Max	L	P	L	P	L	P	
.125	.095	.156	.313	1.50	.358	1.44	.437	1.88	-02
.188	.157	.219	.376	1.62	.421	1.56	.499	2.00	-03
.250	.220	.281	.438	1.75	.483	1.69	.562	2.12	-04
.312	.282	.344	.501	1.88	.546	1.81	.624	2.25	-05
.375	.345	.406	.563	2.00	.608	1.94	.687	2.38	-06
.488	.407	.469	.626	2.12	.671	2.06	.749	2.50	-07
.500	.470	.531	.688	2.25	.733	2.19	.812	2.62	-08
.562	.532	.594	.751	2.38	.796	2.31	.874	2.75	-09
.625	.595	.656	.813	1.88	.858	2.44	.937	2.88	-10
.688	.657	.719	.876	1.94	.921	2.56	.999	3.00	-11
.750	.720	.781	.938	2.00	.983	2.69	1.062	3.12	-12
.812	.782	.844	1.001	2.06	1.046	2.81	1.124	3.25	-13
.875	.845	.906	1.063	2.12	1.108	2.94	1.187	2.50	-14
.938	.907	.969	1.126	2.19	1.171	3.06	1.249	2.56	-15
1.000	.970	1.031	1.188	2.25	1.233	3.19	1.312	2.62	-16
1.062	1.032	1.094	1.251	2.31	1.296	2.25	1.374	2.69	-17
1.125	1.095	1.156	1.313	2.38	1.358	2.31	1.437	2.75	-18
1.188	1.157	1.219	1.376	2.44	1.421	2.38	1.499	2.81	-19
1.250	1.220	1.281	1.438	2.50	1.483	2.44	1.562	2.88	-20

NOTE: For collar selection, see NAS1080.

THIS DOCUMENT IS BEING PROVIDED BY ABBOTT AEROSPACE
Downloaded from http://www.everyspec.com
TECHNICAL LIBRARY
ABBOTTAEROSPACE.COM

THIS DOCUMENT PROVIDED BY THE ABBOTT AEROSPACE
Downloaded from http://www.everyspec.com
TECHNICAL LIBRARY
ABBOTTAEROSPACE.COM

SECTION 423

PIN, SWAGE LOCKING, ALUMINUM ALLOY, 100° HEAD (MS24694), TENSION, PULL-TYPE

APPLICABLE DOCUMENT: NAS1516 THRU 1522

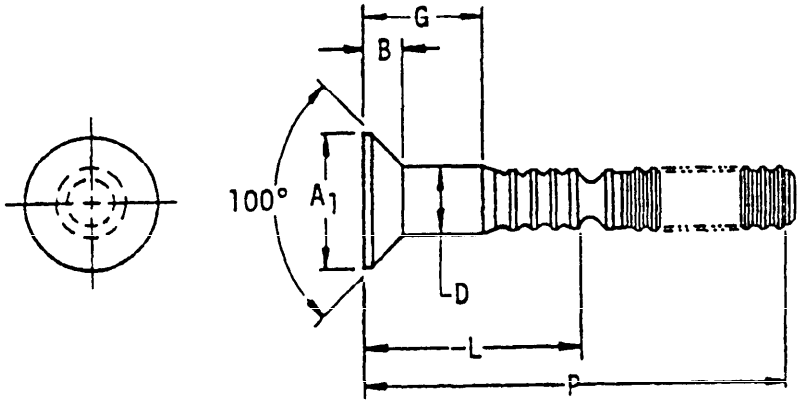

Material	Protective finish	Tensile strength (psi) min
Aluminum alloy 7075	Anodize or chemical surface treatment	42,100

TABLE I. Pin-rivet, groove, configuration.

D Nom size	A_1 Min dia	B Max	Basic part number
.190	.344	.084	NAS1516
.250	.455	.110	NAS1518
.312	.574	.137	NAS1520

GM.

THIS DOCUMENT PROVIDED BY THE ABBOTT AEROSPACE
TECHNICAL LIBRARY
ABBOTTAEROSPACE.COM
Downloaded from http://www.everyspec.com

TABLE II. NAS1516, 1518 and 1520 Dash numbers.

G	Grip range		.190 Dia		.250 Dia		.312 Dia		Grip dash number
	Min	Max	L	P		P	L	P	
.125	.095	.156	.358	1.44	.437	1.88	-	-	-02
.188	.157	.219	.421	1.56	.499	2.00	.568	1.88	-03
.250	.220	.281	.483	1.69	.562	2.12	.631	2.00	-04
.312	.282	.344	.546	1.81	.624	2.25	.693	2.12	-05
.375	.345	.406	.608	1.94	.687	2.38	.756	2.25	-06
.438	.407	.469	.671	2.06	.749	2.50	.818	2.38	-07
.500	.470	.531	.733	2.19	.812	2.62	.881	2.50	-08
.562	.532	.594	.796	2.31	.874	2.75	.943	2.62	-09
.625	.595	.656	.858	2.44	.937	2.88	1.006	2.75	-10
.688	.657	.719	.921	2.56	.999	3.00	1.068	2.88	-11
.750	.720	.781	.983	2.69	1.062	3.12	1.131	3.00	-12
.812	.782	.844	1.046	2.81	1.124	3.25	1.193	2.31	-13
.875	.845	.906	1.108	2.94	1.187	2.50	1.256	2.38	-14
.938	.907	.969	1.171	3.06	1.249	2.56	1.318	2.44	-15
1.000	.970	1.031	1.233	3.19	1.312	2.62	1.381	2.50	-16
1.062	1.032	1.094	-	-	1.374	2.69	-	-	-17
1.125	1.095	1.156	-	-	1.437	2.75	-	-	-18
1.188	1.157	1.219	-	-	1.499	2.81	-	-	-19
1.250	1.220	1.281	-	-	1.562	2.88	-	-	-20
1.312	1.282	1.344	-	-	1.624	2.94	-	-	-21
1.375	1.345	1.406	-	-	1.687	3.00	-	-	-22
1.438	1.407	1.469	-	-	1.749	3.06	-	-	-23
1.500	1.470	1.531	-	-	1.812	3.12	-	-	-24
1.562	1.532	1.594	-	-	1.874	3.19	-	-	-25
1.625	1.595	1.656	-	-	1.937	3.25	-	-	-26
1.688	1.657	1.719	-	-	1.999	3.31	-	-	-27
1.750	1.720	1.781	-	-	2.062	3.38	-	-	-28
1.812	1.782	1.844	-	-	2.124	3.44	-	-	-29
1.875	1.845	1.906	-	-	2.187	3.50	-	-	-30
1.938	1.907	1.969	-	-	2.249	3.56	-	-	-31
2.000	1.970	2.031	-	-	2.312	3.62	-	-	-32

NOTE: For collar selection, see NAS1080.

THIS DOCUMENT PROVIDED BY THE ABBOTT AEROSPACE
TECHNICAL LIBRARY
ABBOTTAEROSPACE.COM
Downloaded from http://www.everyspec.com

SECTION 424

PIN, SWAGE LOCKING, ALUMINUM ALLOY, 100° HEAD (MS20426), TENSION, STUMP-TYPE

APPLICABLE DOCUMENT: NAS6915 THRU 6922

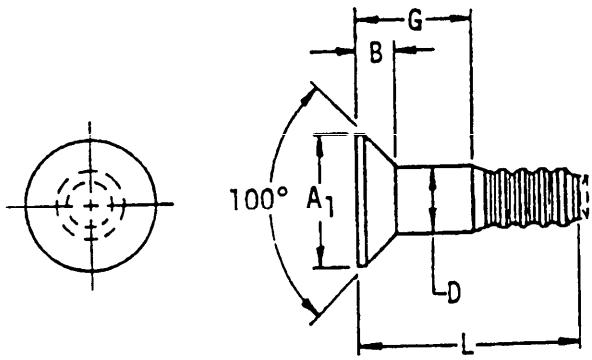

Material	Protective finish	Tensile strength (psi) min
Aluminum alloy 7075	Anodize or chemical surface treatment	42,100

TABLE I. Pin-rivet, groove, configuration part numbers.

D Nom size	A_1 Min dia	B Max	Basic part number
.164	.263	.055	NAS6915
.190	.320	.071	NAS6916
.250	.433	.098	NAS6918
.312	.513	.109	NAS6920
.375	.635	.137	NAS6922

THIS DOCUMENT PROVIDED BY THE ABBOTT AEROSPACE
Downloaded from http://www.everyspec.com
TECHNICAL LIBRARY
ABBOTTAEROSPACE.COM

TABLE II. NAS6915, 6916, 6918, 6920, and 6922 Dash numbers.

G	Grip range		L					Grip dash number
	Min	Max	.164 Dia	.190 Dia	.250 Dia	.312 Dia	.375 Dia	
.125	.095	.156	.324	.386	.456	-	-	-02
.188	.157	.219	.387	.448	.519	.602	.697	-03
.250	.220	.281	.449	.511	.581	.664	.760	-04
.312	.282	.344	.512	.573	.644	.727	.822	-05
.375	.345	.406	.574	.636	.706	.789	.885	-06
.438	.407	.469	.637	.698	.769	.852	.947	-07
.500	.470	.531	.699	.761	.831	.914	1.010	-08
.562	.532	.594	.762	.823	.894	.976	1.072	-09
.625	.595	.656	.824	.886	.956	1.039	1.135	-10
.688	.657	.719	.887	.948	1.019	1.101	1.197	-11
.750	.720	.781	.949	1.011	1.081	1.164	1.260	-12
.812	.782	.844	1.012	1.073	1.144	1.226	1.322	-13
.875	.845	.906	1.074	1.136	1.206	1.289	1.385	-14
.938	.907	.969	1.137	1.198	1.269	1.351	1.447	-15
1.000	.970	1.031	1.199	1.261	1.331	1.414	1.510	-16
1.062	1.032	1.094	1.262	1.323	1.394	1.476	1.572	-17
1.125	1.095	1.156	1.324	1.386	1.456	1.539	1.635	-18
1.188	1.157	1.219	1.387	1.448	1.519	1.602	1.697	-19
1.250	1.220	1.281	1.449	1.511	1.581	1.664	1.760	-20
1.312	1.282	1.344	1.512	1.573	1.644	1.727	1.822	-21
1.375	1.345	1.406	1.574	1.636	1.706	1.789	1.885	-22
1.438	1.407	1.469	1.637	1.698	1.769	1.852	1.947	-23
1.500	1.470	1.531	1.699	1.761	1.831	1.914	2.010	-24
1.562	1.532	1.594	1.762	1.823	1.894	1.976	2.072	-25
1.625	1.595	1.656	1.824	1.886	1.956	2.039	2.135	-26
1.688	1.657	1.719	1.887	1.948	2.019	2.101	2.197	-27
1.750	1.720	1.781	1.949	2.011	2.081	2.164	2.260	-28
1.812	1.782	1.844	2.012	2.073	2.144	2.226	2.322	-29
1.875	1.845	1.906	2.074	2.136	2.206	2.289	2.385	-30
1.938	1.907	1.969	2.137	2.198	2.269	2.351	2.447	-31
2.000	1.970	2.031	2.199	2.261	2.331	2.414	2.510	-32

NOTE: For collar selection, see NAS1080.

THIS DOCUMENT PROVIDED BY THE ABBOTT AEROSPACE
Downloaded from http://www.everyspec.com
TECHNICAL LIBRARY
ABBOTTAEROSPACE.COM

SECTION 425

PIN, SWAGE LOCKING, ALUMINUM ALLOY, PROTRUDING HEAD, TENSION, PULL-TYPE

APPLICABLE DOCUMENT: NAS1525 THRU 1532

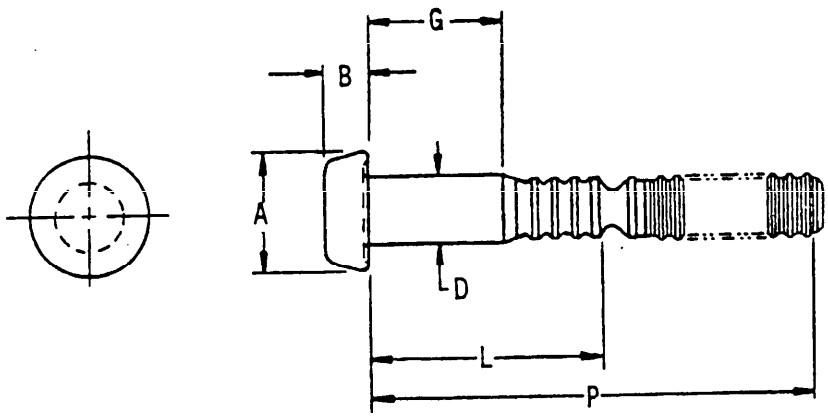

Material	Protective finish	Tensile strength (psi) min
Aluminum alloy 7075	Anodize or chemical surface treatment	42,100

TABLE I. Pin-rivet, groove, configuration.

D Nom size	A Dia	B	Basic part number
.164	.282 .258	.095 .085	NAS1525
.190	.327 .297	.111 .099	NAS1526
.250	.430 .390	.147 .128	NAS1528
.312	.535 .485	.184 .158	NAS1530
.375	.655 .595	.224 .194	NAS1532

TABLE II. NAS1525, 1526, 1528, 1530, and 1532 Dash numbers.

G	Grip range		.164 Dia		.190 Dia		.250 Dia		.312 Dia		.375 Dia		Grip dash number
	Min	Max	L	P	L	P	L	P	L	P	L	P	
.062	.031	.094	.251	1.38	.296	1.31	-	-	-	-	-	-	-01
.125	.095	.156	.313	1.50	.358	1.44	.437	1.88	.506	1.75	.588	2.00	-02
.188	.157	.219	.376	1.62	.421	1.56	.499	2.00	.568	1.88	.650	2.12	-03
.250	.220	.281	.438	1.75	.483	1.69	.562	2.12	.631	2.00	.713	2.25	-04
.312	.282	.344	.501	1.88	.546	1.81	.624	2.25	.693	2.12	.775	2.38	-05
.375	.345	.406	.563	2.00	.608	1.94	.687	2.38	.756	2.25	.838	2.50	-06
.438	.407	.469	.626	2.12	.671	2.06	.749	2.50	.818	2.38	.900	2.62	-07
.500	.470	.531	.688	2.25	.733	2.19	.812	2.62	.881	2.50	.963	2.75	-08
.562	.532	.594	.751	2.38	.796	2.31	.874	2.75	.943	2.62	1.025	2.88	-09
.625	.595	.656	.813	1.88	.858	2.44	.937	2.88	1.006	2.75	1.088	3.00	-10
.688	.657	.719	.876	1.94	.921	2.56	.999	3.00	1.068	2.88	1.150	3.12	-11
.750	.720	.781	.938	2.00	.983	2.69	1.062	3.12	1.131	3.00	1.213	3.25	-12
.812	.782	.844	1.001	2.06	1.046	2.81	1.124	3.25	1.193	2.31	1.275	2.56	-13
.875	.845	.906	1.063	2.12	1.108	2.94	1.187	2.50	1.256	2.38	1.338	2.62	-14
.938	.907	.969	1.126	2.19	1.171	3.06	1.249	2.56	1.318	2.44	1.400	2.69	-15
1.000	.970	1.031	1.188	2.25	1.233	3.19	1.312	2.62	1.381	2.50	1.463	2.75	-16
1.062	1.032	1.094	1.251	2.31	1.296	2.25	1.374	2.69	1.443	2.56	1.525	2.81	-17
1.125	1.095	1.156	1.313	2.38	1.358	2.31	1.437	2.75	1.506	2.62	1.588	2.88	-18
1.188	1.157	1.219	1.376	2.44	1.421	2.38	1.499	2.81	1.568	2.69	1.650	2.94	-19
1.250	1.220	1.281	1.438	2.50	1.483	2.44	1.562	2.88	1.631	2.75	1.713	3.00	-20
1.312	1.282	1.344	1.501	2.56	1.546	2.50	1.624	2.94	1.693	2.81	1.775	3.06	-21
1.375	1.345	1.406	1.563	2.62	1.608	2.56	1.687	3.00	1.756	2.88	1.838	3.12	-22
1.438	1.407	1.469	-	-	-	-	-	-	1.818	2.94	-	-	-23
1.500	1.470	1.531	-	-	-	-	-	-	1.881	3.00	-	-	-24
1.562	1.532	1.594	-	-	-	-	-	-	1.943	3.06	-	-	-25
1.625	1.595	1.656	-	-	-	-	-	-	2.006	3.12	-	-	-26
1.688	1.657	1.719	-	-	-	-	-	-	2.068	3.19	-	-	-27
1.750	1.720	1.781	-	-	-	-	-	-	2.131	3.25	-	-	-28

NOTE: For collar selection, see NAS1080.

THIS DOCUMENT WAS DOWNLOADED FROM THE ABBOTT AEROSPACE TECHNICAL LIBRARY
Downloaded from http://www.everyspec.com
ABBOTTAEROSPACE.COM

THIS DOCUMENT PROVIDED BY THE ABBOTT AEROSPACE
Downloaded from http://www.everyspec.com
TECHNICAL LIBRARY
ABBOTTAEROSPACE.COM

SECTION 426

PIN, SWAGE LOCKING, ALUMINUM ALLOY, PROTRUDING HEAD, TENSION, STUMP-TYPE

APPLICABLE DOCUMENT: NAS1555 THRU 1562

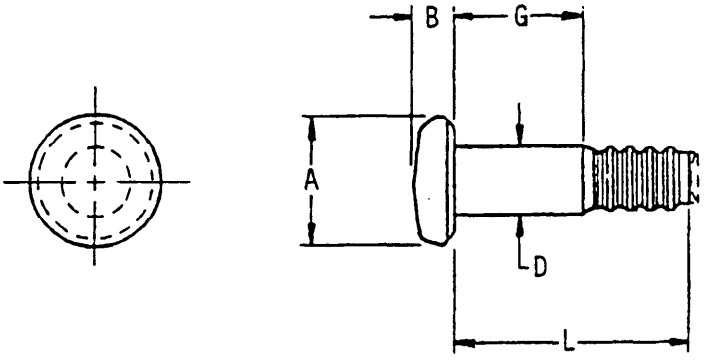

Material	Protective finish	Tensile strength (psi) min
Aluminum alloy 7075	Anodize or chemical surface treatment	42,100

TABLE I. Pin-rivet, groove, configuration part numbers.

D Nom size	A Dia	B	Basic part number
.190	.317 .302	.088 .078	NAS1556
.250	.411 .396	.113 .103	NAS1558
.312	.515 .500	.152 .142	NAS1560

THIS DOCUMENT PROVIDED BY THE ABBOTT AEROSPACE
Downloaded from http://www.everyspec.com
TECHNICAL LIBRARY
ABBOTTAEROSPACE.COM

TABLE II. NAS1556, 1558 and 1560 Dash numbers.

G	Grip range		L			Grip dash number
	Min	Max	.190 Dia	.250 Dia	.312 Dia	
.062	.031	.094	.323	-	-	-01
.125	.095	.156	.386	.456	.539	-02
.188	.157	.219	.448	.519	.602	-03
.250	.220	.281	.511	.581	.664	-04
.312	.282	.344	.573	.644	.727	-05
.375	.345	.406	.636	.706	.789	-06
.438	.407	.469	.698	.769	.852	-07
.500	.470	.531	.761	.831	.914	-08
.562	.532	.594	.823	.894	.976	-09
.625	.595	.656	.886	.956	1.039	-10
.688	.657	.719	.948	1.019	1.101	-11
.750	.720	.781	1.011	1.081	1.164	-12
.812	.782	.844	1.073	1.144	1.226	-13
.875	.845	.906	1.136	1.206	1.289	-14
.938	.907	.969	1.198	1.269	1.351	-15
1.000	.970	1.031	1.261	1.331	1.414	-16

NOTE: For collar selection, see NAS1080.

THIS DOCUMENT PROVIDED BY THE ABBOTT AEROSPACE
Downloaded from http://www.everyspec.com
TECHNICAL LIBRARY
ABBOTTAEROSPACE.COM

SECTION 427

PIN, SWAGE-LOCKING, BRAZIER HEAD, STRAIGHT SHANK, SIX LOCKING GROOVES. ALUMINUM ALLOY, CORROSION RESISTANT STEEL AND CARBON STEEL

APPLICABLE DOCUMENT: MIL-P-23469/2

TYPE I - SIX LOCKING GROOVE PINS

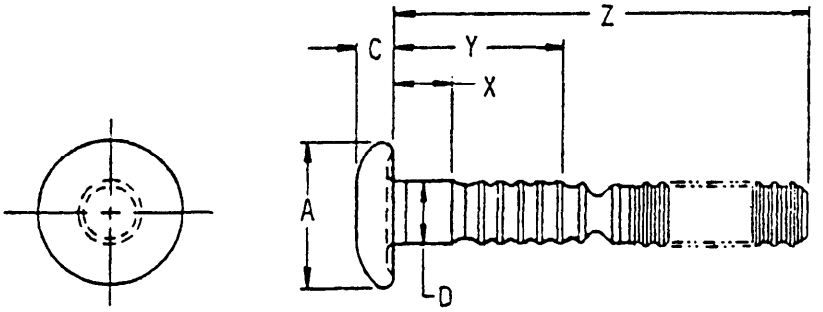

Material	Protective finish	Shear strength (psi) min	Class
Aluminum alloy 6061	Not specified	26,900	1
Cres #10 AISI 304 AISI 305	Not specified	68,400	2
Carbon steel C1035, C1038, C1041, C10B18, C10B23	Not specified	61,600	3

TABLE I. Pin-rivet, groove, configuration.

D Nom dia	A Dia	C
.188	.394 .356	.113 .125
.250	.525 .475	.136 .152
.312	.656 .594	.181 .201
.375	.787 .713	.223 .248

TABLE II. M23469/2 dash numbers.

.188 diameter					Dash number			.250 diameter					Dash number		
Grip range		X	Y	Z	Al	Cres	Carbon steel	Grip range		X	Y	Z	Al	Cres	Carbon steel
Min	Max				Class 1	Class 2	Class 3	Min	Max				Class 1	Class 2	Class 3
.062	.187	.062	.326	1.50	-10602	-20602	-30602	.062	.187	.062	.396	1.63	-10802	-20802	-30802
.125	.250	.125	.389	1.56	-10603	-20603	-30603	.125	.250	.125	.459	1.69	-10803	-20803	-30803
.187	.312	.187	.451	1.63	-10604	-20604	-30604	.187	.312	.187	.521	1.75	-10804	-20804	-30804
.250	.375	.250	.514	1.69	-10605	-20605	-30605	.250	.375	.250	.584	1.81	-10805	-20805	-30805
.312	.437	.312	.576	1.75	-10606	-20606	-30606	.312	.437	.312	.646	1.88	-10806	-20806	-30806
.375	.500	.375	.639	1.81	-10607	-20607	-30607	.375	.500	.375	.709	1.94	-10807	-20807	-30807
.437	.562	.437	.701	1.88	-10608	-20608	-30608	.437	.562	.437	.771	2.00	-10808	-20808	-30808
.500	.625	.500	.764	1.94	-10609	-20609	-30609	.500	.625	.500	.834	2.06	-10809	-20809	-30809
.562	.687	.562	.826	2.00	-10610	-20610	-30610	.562	.687	.562	.896	2.13	-10810	-20810	-30810
.625	.750	.625	.889	2.06	-10611	-20611	-30611	.625	.750	.625	.959	2.19	-10811	-20811	-30811
.687	.812	.687	.951	2.13	-10612	-20612	-30612	.687	.812	.687	1.021	2.25	-10812	-20812	-30812
.750	.875	.750	1.014	2.19	-10613	-20613	-30613	.750	.875	.750	1.084	2.31	-10813	-20813	-30813
.812	.937	.812	1.076	2.25	-10614	-20614	-30614	.812	.937	.812	1.146	2.38	-10814	-20814	-30814
.875	1.000	.875	1.139	2.31	-10615	-20615	-30615	.875	1.000	.875	1.209	2.44	-10815	-20815	-30815
.937	1.062	.937	1.201	2.38	-10616	-20616	-30616	.937	1.062	.937	1.271	2.50	-10816	-20816	-30816
1.000	1.125	1.000	1.264	2.44	-10617	-20617	-30617	1.000	1.125	1.000	1.334	2.56	-10817	-20817	-30817

.312 diameter					Dash number			.375 diameter					Dash number		
Grip range		X	Y	Z	Al	Cres	Carbon steel	Grip range		X	Y	Z	Al	Cres	Carbon steel
Min	Max				Class 1	Class 2	Class 3	Min	Max				Class 1	Class 2	Class 3
.125	.375	.125	.570	1.97	-11004	-21004	-31004	.125	.375	.125	.658	2.25	-11204	-21204	-31204
.250	.500	.250	.695	2.09	-11006	-21006	-31006	.250	.500	.250	.783	2.38	-11206	-21206	-31206
.375	.625	.375	.820	2.22	-11008	-21008	-31008	.375	.625	.375	.908	2.50	-11208	-21208	-31208
.500	.750	.500	.945	2.34	-11010	-21010	-31010	.500	.750	.500	1.033	2.63	-11210	-21210	-31210
.625	.875	.625	1.070	2.47	-11012	-21012	-31012	.625	.875	.625	1.158	2.75	-11212	-21212	-31212
.750	1.000	.750	1.195	2.59	-11014	-21014	-31014	.750	1.000	.750	1.283	2.88	-11214	-21214	-31214
.875	1.125	.875	1.320	2.72	-11016	-21016	-31016	.875	1.125	.875	1.408	3.00	-11216	-21216	-31216
1.000	1.250	1.000	1.445	2.84	-11018	-21018	-31018	1.000	1.250	1.000	1.533	3.13	-11218	-21218	-31218

THIS DOCUMENT IS BEING PROVIDED BY ABBOTT AEROSPACE
Downloaded from http://www.everyspec.com
TECHNICAL LIBRARY
ABBOTTAEROSPACE.COM

THIS DOCUMENT PROVIDED BY THE ABBOTT AEROSPACE
Downloaded from http://www.everyspec.com
TECHNICAL LIBRARY
ABBOTTAEROSPACE.COM

SECTION 428

PIN, SWAGE-LOCKING, BUTTON HEAD, STRAIGHT SHANK, SIX LOCKING GROOVES AND MULTIPLE LOCKING GROOVES, ALUMINUM ALLOY, CORROSION RESISTANT STEEL AND CARBON STEEL

APPLICABLE DOCUMENT: MIL-P-23469/4

TYPE I - SIX LOCKING GROOVE PINS

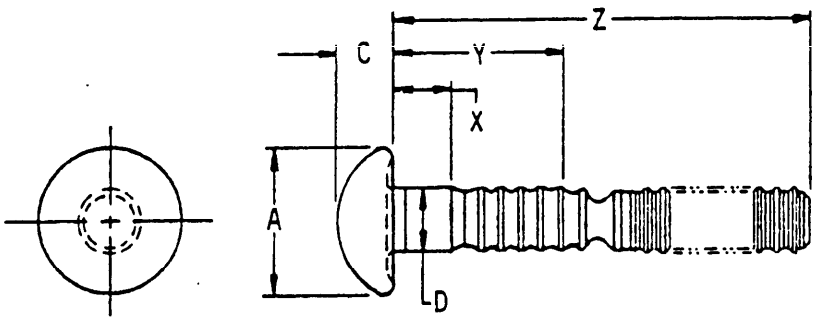

TABLE I. Pin-rivet, groove, configuration.

D Nom dia	A Dia	C
.188	.342 .312	.135 .145
.250	.458 .418	.181 .195
.312	.571 .521	.244 .224
.375	.686 .626	.269 .293

THIS DOCUMENT PROVIDED BY THE ABBOTT AEROSPACE
Downloaded from http://www.everyspec.com
TECHNICAL LIBRARY
ABBOTTAEROSPACE.COM

Material	Protective finish	Shear strength (psi) min	Class
Aluminum alloy 6061	Not specified	26,900	1
Cres #10 AISI 304 AISI 305	Not specified	68,400	2
Carbon steel C1035, C1038, C1041, C10B18, C10B23	Not specified	61,600	3

TABLE II. M23469/4 Dash numbers.

.188 diameter					Dash number		
Grip range		X	Y	Z	Al	Cres	Carbon steel
Min	Max				Class 1	Class 2	Class 3
.062	.187	.062	.326	1.50	-10602	-20602	-30602
.125	.250	.125	.389	1.56	-10603	-20603	-30603
.187	.312	.187	.451	1.63	-10604	-20604	-30604
.250	.375	.250	.514	1.69	-10605	-20605	-30605
.312	.437	.312	.576	1.75	-10606	-20606	-30606
.375	.500	.375	.639	1.81	-10607	-20607	-30607
.437	.562	.437	.701	1.88	-10608	-20608	-30608
.500	.625	.500	.764	1.94	-10609	-20609	-30609
.562	.687	.562	.826	2.00	-10610	-20610	-30610
.625	.750	.625	.889	2.06	-10611	-20611	-30611
.687	.812	.687	.951	2.13	-10612	-20612	-30612
.750	.875	.750	1.014	2.19	-10613	-20613	-30613
.812	.937	.812	1.076	2.25	-10614	-20614	-30614
.875	1.000	.875	1.139	2.31	-10615	-20615	-30615
.937	1.062	.937	1.201	2.38	-10616	-20616	-30616
1.000	1.125	1.000	1.264	2.44	-10617	-20617	-30617

.250 diameter					Dash number		
Grip range		X	Y	Z	Al	Cres	Carbon steel
Min	Max				Class 1	Class 2	Class 3
.062	.187	.062	.396	1.63	-10802	-20802	-30802
.125	.250	.125	.459	1.69	-10803	-20803	-30803
.187	.312	.187	.521	1.75	-10804	-20804	-30804
.250	.375	.250	.584	1.81	-10805	-20805	-30805
.312	.437	.312	.646	1.88	-10806	-20806	-30806
.375	.500	.375	.709	1.94	-10807	-20807	-30807
.437	.562	.437	.771	2.00	-10808	-20808	-30808
.500	.625	.500	.834	2.06	-10809	-20809	-30809
.562	.687	.562	.896	2.13	-10810	-20810	-30810
.625	.750	.625	.959	2.19	-10811	-20811	-30811
.687	.812	.687	1.021	2.25	-10812	-20812	-30812
.750	.875	.750	1.084	2.31	-10813	-20813	-30813
.812	.937	.812	1.146	2.38	-10814	-20814	-30814
.875	1.000	.875	1.209	2.44	-10815	-20815	-30815
.937	1.062	.937	1.271	2.50	-10816	-20816	-30816
1.000	1.125	1.000	1.334	2.56	-10817	-20817	-30817

.312 diameter					Dash number		
Grip range		X	Y	Z	Al	Cres	Carbon steel
Min	Max				Class 1	Class 2	Class 3
.125	.375	.125	.570	1.97	-11004	-21004	-31004
.250	.500	.250	.695	2.09	-11006	-21006	-31006
.375	.625	.375	.820	2.22	-11008	-21008	-31008
.500	.750	.500	.945	2.34	-11010	-21010	-31010
.625	.875	.625	1.070	2.47	-11012	-21012	-31012
.750	1.000	.750	1.195	2.59	-11014	-21014	-31014
.875	1.125	.875	1.320	2.72	-11016	-21016	-31016
1.000	1.250	1.000	1.445	2.84	-11018	-21018	-31018

.375 diameter					Dash number		
Grip range		X	Y	Z	Al	Cres	Carbon steel
Min	Max				Class 1	Class 2	Class 3
.125	.375	.125	.658	2.25	-11204	-21204	-31204
.250	.500	.250	.783	2.38	-11206	-21206	-31206
.375	.625	.375	.908	2.50	-11208	-21208	-31208
.500	.750	.500	1.033	2.63	-11210	-21210	-31210
.625	.875	.625	1.158	2.75	-11212	-21212	-31212
.750	1.000	.750	1.283	2.88	-11214	-21214	-31214
.875	1.125	.875	1.408	3.00	-11216	-21216	-31216
1.000	1.250	1.000	1.533	3.13	-11218	-21218	-31218

THIS DOCUMENT PROVIDED BY THE ABBOTT AEROSPACE
Downloaded from http://www.everyspec.com
TECHNICAL LIBRARY
ABBOTTAEROSPACE.COM

TYPE II - MULTIPLE LOCKING GROOVE PINS.

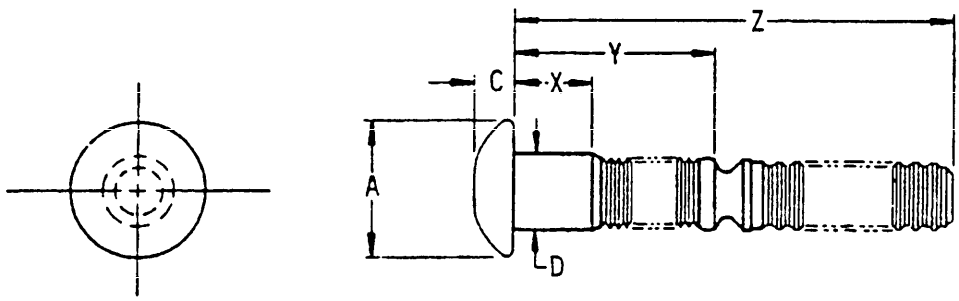

TABLE I. Pin-rivet, groove, configuration.

D Nom dia	A Dia	C
.500	.938 .875	.302 .330
.625	1.187 1.094	.378 .415
.750	1.438 1.328	.455 .500
.875	1.656 1.547	.531 .578
1.000	1.906 1.781	.591 .640

TABLE II. M23469/4 dash numbers.

.500 diameter					Dash number			.750 diameter					Dash number		
Grip range		X	Y	Z	Al	Cres	Carbon steel	Grip range		X	Y	Z	Al	Cres	Carbon steel
Min	Max				Class 1	Class 2	Class 3	Min	Max				Class 1	Class 2	Class 3
.251	.500	.188	1.213	3.36	-11604	-21604	-31604	.251	.500	.188	1.518	4.34	-12404	-22404	-32404
.501	.750	.438	1.463	3.61	-11608	-21608	-31608	.501	.750	.438	1.768	4.59	-12408	-22408	-32408
.751	1.000	.688	1.713	3.86	-11612	-21612	-31612	.751	1.000	.688	2.018	4.84	-12412	-22412	-32412
1.001	1.250	.938	1.963	4.11	-11616	-21616	-31616	1.001	1.250	.938	2.268	5.09	-12416	-22416	-32416
1.251	1.500	1.188	2.213	4.36	-11620	-21620	-31620	1.251	1.500	1.188	2.518	5.34	-12420	-22420	-32420
1.501	1.750	1.438	2.463	4.61	-11624	-21624	-31624	1.501	1.750	1.438	2.768	5.59	-12424	-22424	-32424
1.751	2.000	1.688	2.713	4.86	-11628	-21628	-31628	1.751	2.000	1.688	3.018	5.84	-12428	-22428	-32428
2.001	2.250	1.938	2.963	5.11	-11632	-21632	-21632	2.001	2.250	1.938	3.268	6.09	-12432	-22432	-32432

.625 diameter					Dash number			.875 diameter					Dash number		
Grip range		X	Y	Z	Al	Cres		Grip range		X	Y	Z	Al	Cres	Carbon steel
Min	Max				Class 1	Class 2		Min	Max				Class 1	Class 2	Class 3
.251	.500	.188	1.363	3.78	-12004	-22004									
.501	.750	.438	1.613	4.03	-12008	-22008		.501	.750	.438	1.921	4.88	-12808	-22808	-32808
.751	1.000	.688	1.863	4.28	-12012	-22012		.751	1.000	.688	2.171	5.13	-12812	-22812	-32812
1.001	1.250	.938	2.113	4.53	-12016	-22016		1.001	1.250	.938	2.421	5.38	-12816	-22816	-32816
1.251	1.500	1.188	2.363	4.78	-12020	-22024		1.251	1.500	1.188	2.671	5.63	-12820	-22820	-32820
1.501	1.750	1.438	2.613	5.03	-12024	-22024		1.501	1.750	1.438	2.921	5.88	-12824	-22824	-32824
1.751	2.000	1.688	2.863	5.28	-12028	-22028		1.751	2.000	1.688	3.171	6.13	-12828	-22828	-32828
2.001	2.250	1.938	3.113	5.53	-12032	-22032		2.001	2.250	1.938	3.421	6.38	-12832	-22832	-32832

.625 diameter					Dash number			1.000 diameter					Dash number		
Grip range		X	Y	Z			Carbon steel	Grip range		X	Y	Z	Al	Cres	Carbon steel
Min	Max						Class 3	Min	Max				Class 1	Class 2	Class 3
.251	.500	.188	1.433	3.84			-32004								
.501	.750	.438	1.683	4.09			-32008	.501	.750	.438	2.073	5.57	-13208	-23208	-33208
.751	1.000	.688	1.933	4.34			-32012	.751	1.000	.688	2.323	5.82	-13212	-23212	-33212
1.001	1.250	.938	2.183	4.59			-32016	1.001	1.250	.938	2.573	6.07	-13216	-23216	-33216
1.251	1.500	1.188	2.433	4.84			-32020	1.251	1.500	1.188	2.823	6.32	-13220	-23220	-33220
1.501	1.750	1.438	2.683	5.09			-32024	1.501	1.750	1.438	3.	6.57	-13224	-23224	-33224
1.751	2.000	1.688	2.933	5.34			-32028	1.751	2.000	1.688	3.323	6.82	-13228	-23228	-33228
2.001	2.250	1.938	3.183	5.59			-32032	2.001	2.250	1.938	3.573	7.07	-13232	-23232	-33232

THIS DOCUMENT IS BEING PROVIDED BY
TECHNICAL LIBRARY
ABBOTTAEROSPACE.COM
Downloaded from http://www.everyspec.com

THIS DOCUMENT PROVIDED BY THE ABBOTT AEROSPACE
TECHNICAL LIBRARY
ABBOTTAEROSPACE.COM
Downloaded from http://www.everyspec.com

SECTION 429

PIN, SWAGE-LOCKING, FLAT 90° COUNTERSUNK HEAD, STRAIGHT SHANK, SIX LOCKING GROOVES AND MULTIPLE LOCKING GROOVES, ALUMINUM ALLOY, CORROSION RESISTANT STEEL AND CARBON STEEL

APPLICABLE DOCUMENT: MIL-P-23469/6

Material	Protective finish	Shear strength (psi) min	Class
Aluminum alloy 6061	Not specified	26,900	1
Cres #10 AISI 304 AISI 305	Not specified	68,400	2
Carbon steel C1035, C1038, C1041, C10B18, C10B23	Not specified	61,600	3

THIS DOCUMENT PROVIDED BY THE ABBOTT AEROSPACE
TECHNICAL LIBRARY
ABBOTTAEROSPACE.COM
Downloaded from http://www.everyspec.com

TYPE I - SIX LOCKING GROOVE PINS

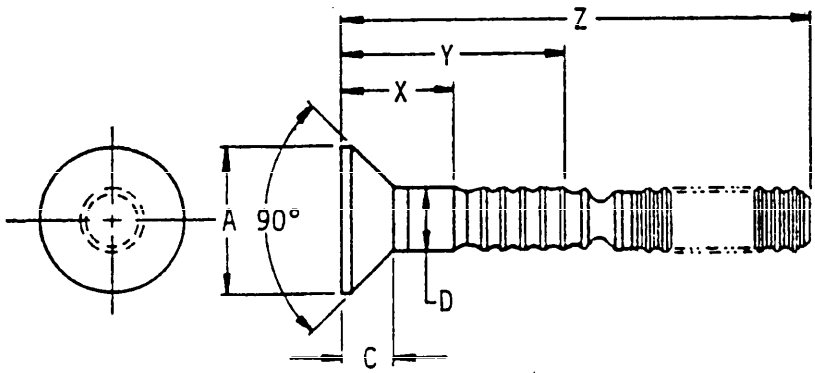

TABLE I. Pin-rivet, groove, configuration.

D Nom dia	A Dia	C
.188	.354 .328	.078 .085
.250	.473 .437	.104 .113
.312	.589 .547	.131 .140
.375	.709 .656	.155 .168

TABLE II. M23469/6 Dash numbers.

.188 Diameter					Dash no.			.250 Diameter					Dash no.		
Grip range		X	Y	Z	Al	Cres	Carbon steel	Grip range		X	Y	Z	Al	Cres	Carbon steel
Min	Max				Class 1	Class 2	Class 3	Min	Max				Class 1	Class 2	Class 3
.125	.250	.125	.389	1.56	-10603	-20603	-30603	.125	.250	.125	.459	1.69	-10803	-20803	-30803
.187	.312	.187	.451	1.63	-10604	-20604	-30604	.187	.312	.187	.521	1.75	-10804	-20804	-30804
.250	.375	.250	.514	1.69	-10605	-20605	-30605	.250	.375	.250	.584	1.81	-10805	-20805	-30805
.312	.437	.312	.576	1.75	-10606	-20606	-30606	.312	.437	.312	.646	1.88	-10806	-20806	-30806
.375	.500	.375	.639	1.81	-10607	-20607	-30607	.375	.500	.375	.709	1.94	-10807	-20807	-30807
.437	.562	.437	.701	1.88	-10608	-20608	-30608	.437	.562	.437	.771	2.00	-10808	-20808	-30808
.500	.625	.500	.764	1.94	-10609	-20609	-30609	.500	.625	.500	.834	2.06	-10809	-20809	-30809
.562	.687	.562	.826	2.00	-10610	-20610	-30610	.562	.687	.562	.896	2.13	-10810	-20810	-30810
.625	.750	.625	.889	2.06	-10611	-20611	-30611	.625	.750	.625	.959	2.19	-10811	-20811	-30811
.687	.812	.687	.951	2.13	-10612	-20612	-30612	.687	.812	.687	1.021	2.25	-10812	-20812	-30812
.750	.875	.750	1.014	2.19	-10613	-20613	-30613	.750	.875	.750	1.084	2.31	-10813	-20813	-30813
.812	.937	.812	1.076	2.25	-10614	-20614	-30614	.812	.937	.812	1.146	2.38	-10814	-20814	-30814
.875	1.000	.875	1.139	2.31	-10615	-20615	-30615	.875	1.000	.875	1.209	2.44	-10815	-20815	-30815
.937	1.062	.937	1.201	2.38	-10616	-20616	-30616	.937	1.062	.937	1.271	2.50	-10816	-20816	-30816
1.000	1.125	1.000	1.264	2.44	-10617	-20617	-30617	1.000	1.125	1.000	1.334	2.56	-10817	-20817	-30817

.312 Diameter					Dash no.			.375 Diameter					Dash no.		
Grip range		X	Y	Z	Al	Cres	Carbon steel	Grip range		X	Y	Z	Al	Cres	Carbon steel
Min	Max				Class 1	Class 2	Class 3	Min	Max				Class 1	Class 2	Class 3
.125	.375	.125	.570	1.97	-11004	-21004	-31004								
.250	.500	.250	.695	2.09	-11006	-21006	-31006	.250	.500	.250	.783	2.38	-11206	-21206	-31206
.375	.625	.375	.820	2.22	-11008	-21008	-31008	.375	.625	.375	.908	2.50	-11208	-21208	-31208
.500	.750	.500	.945	2.34	-11010	-21010	-31010	.500	.750	.500	1.033	2.63	-11210	-21210	-31210
.625	.875	.625	1.070	2.47	-11012	-21012	-31012	.625	.875	.625	1.158	2.75	-11212	-21212	-31212
.750	1.000	.750	1.195	2.59	-11014	-21014	-31014	.750	1.000	.750	1.283	2.88	-11214	-21214	-31214
.875	1.125	.875	1.320	2.72	-11016	-21016	-31016	.875	1.125	.875	1.408	3.00	-11216	-21216	-31216
1.000	1.250	1.000	1.445	2.84	-11018	-21018	-31013	1.000	1.250	1.000	1.533	3.13	-11218	-21218	-31218

THIS DOCUMENT DOWNLOADED FROM http://www.everyspec.com
TECHNICAL LIBRARY
ABBOTTAEROSPACE.COM

THIS DOCUMENT PROVIDED BY THE ABBOTT AEROSPACE
Downloaded from http://www.everyspec.com
TECHNICAL LIBRARY
ABBOTTAEROSPACE.COM

TYPE II - MULTIPLE LOCKING GROOVE PINS.

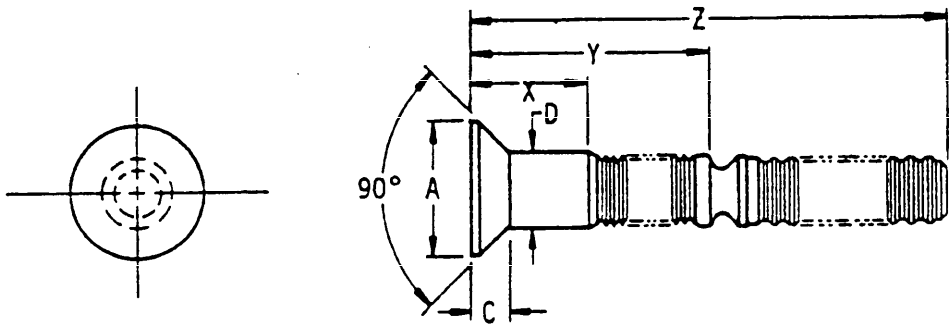

TABLE I. Pin-rivet, groove, configuration.

D Nom dia	A Dia	C
.500	.945 .875	.225 .239
.625	1.183 1.093	.284 .300
.750	1.417 1.312	.340 .360
.875	1.655 1.531	.396 .420
1.000	1.895 1.750	.453 .481

TABLE II. M23469/6 Dash numbers.

.500 Diameter					Dash no.		
Grip range		X	Y	Z	Al	Cres	Carbon steel
Min	Max				Class 1	Class 2	Class 3
.501	.750	.438	1.463	3.61	-11608	-21608	-31608
.751	1.000	.688	1.713	3.86	-11612	-21612	-31612
1.001	1.250	.938	1.963	4.11	-11616	-21616	-31616
1.251	1.500	1.188	2.213	4.36	-11620	-21620	-31620
1.501	1.750	1.438	2.463	4.61	-11624	-21624	-31624
1.751	2.000	1.688	2.713	4.86	-11628	-21628	-31628
2.001	2.250	1.938	2.963	5.11	-11632	-21632	-31632

.625 Diameter					Dash no.		
Grip range		X	Y	Z	Al	Cres	Carbon steel
Min	Max				Class 1	Class 2	Class 3
.501	.750	.438	1.613	4.03	-12008	-22008	
.751	1.000	.688	1.863	4.28	-12012	-22012	
1.001	1.250	.938	2.113	4.53	-12016	-22016	
1.251	1.500	1.188	2.363	4.78	-12020	-22020	
1.501	1.750	1.438	2.613	5.03	-12024	-22024	
1.751	2.000	1.688	2.863	5.28	-12028	-22028	
2.001	2.250	1.938	3.113	5.53	-12032	-22032	

.625 Diameter					Dash no.		
Grip range		X	Y	Z	Al	Cres	
Min	Max				Class 1	Class 2	
.501	.750	.438	1.683	4.09			-32008
.751	1.000	.688	1.933	4.34			-32012
1.001	1.250	.938	2.183	4.59			-32016
1.251	1.500	1.188	2.433	4.84			-32020
1.501	1.750	1.438	2.683	5.09			-32024
1.751	2.000	1.688	2.933	5.34			-32028
2.001	2.250	1.938	3.183	5.59			-32032

.750 Diameter					Dash no.		
Grip range		X	Y	Z	Al	Cres	Carbon steel
Min	Max				Class 1	Class 2	Class 3
.751	1.000	.688	2.018	4.84	-12412	-22412	-32412
1.001	1.250	.938	2.268	5.09	-12416	-22416	-32416
1.251	1.500	1.188	2.518	5.34	-12420	-22420	-32420
1.501	1.750	1.438	2.768	5.59	-12424	-22424	-32424
1.751	2.000	1.688	3.018	5.84	-12428	-22428	-32428
2.001	2.250	1.938	3.268	6.09	-12432	-22432	-32432

.875 Diameter					Dash no.		
Grip range		X	Y	Z	Al	Cres	Carbon steel
Min	Max				Class 1	Class 2	Class 3
.751	1.000	.688	2.171	5.13	-12812	-22812	-32812
1.001	1.250	.938	2.421	5.38	-12816	-22816	-32816
1.251	1.500	1.188	2.671	5.63	-12820	-22820	-32820
1.501	1.750	1.438	2.921	5.88	-12824	-22824	-32824
1.751	2.000	1.688	3.171	6.13	-12828	-22828	-32828
2.001	2.250	1.938	3.421	6.38	-12832	-22832	-32832

1.000 Diameter					Dash no.		
Grip range		X	Y	Z	Al	Cres	Carbon steel
Min	Max				Class 1	Class 2	Class 3
1.001	1.250	.938	2.573	6.07	-13216	-23216	-33216
1.251	1.500	1.188	2.823	6.32	-13220	-23220	-33220
1.501	1.750	1.438	3.073	6.57	-13224	-23224	-33224
1.751	2.000	1.688	3.323	6.82	-13228	-23228	-33228
2.001	2.250	1.938	3.573	7.07	-13232	-23232	-33232

THIS DOCUMENT WAS DOWNLOADED FROM THE ABBOTT AEROSPACE TECHNICAL LIBRARY
http://www.everyspec.com
ABBOTTAEROSPACE.COM

THIS DOCUMENT PROVIDED BY THE ABBOTT AEROSPACE
TECHNICAL LIBRARY
ABBOTTAEROSPACE.COM
Downloaded from http://www.everyspec.com

THIS DOCUMENT PROVIDED BY THE ABBOTT AEROSPACE
Downloaded from http://www.everyspec.com
TECHNICAL LIBRARY
ABBOTTAEROSPACE.COM

SECTION 430

PIN, SWAGE-LOCKING, OVAL 60° COUNTERSUNK HEAD, TAPERED-SECTION SHANK, MULTIPLE LOCKING GROOVES, ALUMINUM ALLOY, CORROSION RESISTANT STEEL AND CARBON STEEL

APPLICABLE DOCUMENT: MIL-P-23469/7

TYPE II - MULTIPLE LOCKING GROOVE PINS

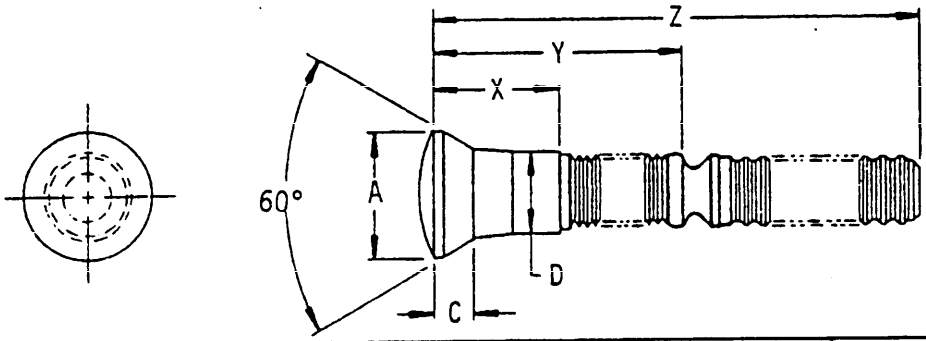

Material	Protective finish	Shear strength (psi) min	Class
Aluminum alloy 6061	Not specified	26,900	1
Cres #10 AISI 304 AISI 305	Not specified	68,400	2
Carbon steel C1035, C1038, C1041, C10B18, C10B23	Not specified	61,600	3
Cres	Cadmium plate	68,400	4

TABLE I. Pin-rivet, groove, configuration.

D Nom dia	A Dia	C
.500	.808 .768	.218 .238
.625	1.005 .965	.274 .294
.750	1.203 1.163	.337 .357
.875	1.400 1.360	.393 .413
1.000	1.597 1.557	.454 .474

TABLE II. M23469/7 dash numbers.

.500 Diameter					Dash no.			
Grip range		X	Y	Z	Al	Cres	Carbon steel	Cres cad
Min	Max				Class 1	Class 2	Class 3	Class 4
.751	1.000	.688	1.713	3.86	-11612	-21612	-31612	-41612
1.001	1.250	.938	1.963	4.11	-11616	-21616	-31616	-41616
1.251	1.500	1.188	2.213	4.36	-11620	-21620	-31620	-41620
1.501	1.750	1.438	2.463	4.61	-11624	-21624	-31624	-41624
1.751	2.000	1.688	2.713	4.86	-11628	-21628	-31628	-41628
2.001	2.250	1.938	2.963	5.11	-11632	-21632	-31632	-41632

.625 Diameter					Dash no.			
Grip range		X	Y	Z	Al	Cres		Cres cad
Min	Max				Class 1	Class 2		Class 4
.751	1.000	.688	1.863	4.28	-12012	-22012		-42012
1.001	1.250	.938	2.113	4.53	-12016	-22016		-42016
1.251	1.500	1.188	2.363	4.78	-12020	-22020		-42020
1.501	1.750	1.438	2.613	5.03	-12024	-22024		-42024
1.751	2.000	1.688	2.863	5.28	-12028	-22028		-42028
2.001	2.250	1.938	3.113	5.53	-12032	-22032		-42032

.625 Diameter					Dash no.			
Grip range		X	Y	Z			Carbon steel	
Min	Max						Class 3	
.751	1.000	.688	1.933	4.34			-32012	
1.001	1.250	.938	2.183	4.59			-32016	
1.251	1.500	1.188	2.433	4.84			-32020	
1.501	1.750	1.438	2.683	5.09			-32024	
1.751	2.000	1.688	2.933	5.34			-32028	
2.001	2.250	1.938	3.183	5.59			-32032	

.750 Diameter					Dash no.			
Grip range		X	Y	Z	Al	Cres	Carbon steel	Cres cad
Min	Max				Class 1	Class 2	Class 3	Class 4
1.001	1.250	.938	2.268	5.09	-12416	-22416	-32416	-42416
1.251	1.500	1.188	2.518	5.34	-12420	-22420	-32420	-42420
1.501	1.750	1.438	2.768	5.59	-12424	-22424	-32424	-42424
1.751	2.000	1.688	3.018	5.84	-12428	-22428	-32428	-42428
2.001	2.250	1.938	3.268	6.09	-12432	-22432	-32432	-42432

.875 Diameter					Dash no.			
Grip range		X	Y	Z	Al	Cres	Carbon steel	Cres cad
Min	Max				Class 1	Class 2	Class 3	Class 4
1.001	1.250	.938	2.421	5.38	-12816	-22816	-32816	-42816
1.251	1.500	1.188	2.671	5.63	-12820	-22820	-32820	-42820
1.501	1.750	1.438	2.921	5.88	-12824	-22824	-32824	-42824
1.751	2.000	1.688	3.171	6.13	-12828	-22828	-32828	-42828
2.001	2.250	1.938	3.421	6.38	-12832	-22832	-32832	-42832

1.000 Diameter					Dash no.			
Grip range		X	Y	Z	Al	Cres	Carbon steel	Cres cad
Min	Max				Class 1	Class 2	Class 3	Class 4
1.251	1.500	1.188	2.823	6.32	-13220	-23220	-33220	-43220
1.501	1.750	1.438	3.073	6.57	-13224	-23224	-33224	-43224
1.751	2.000	1.688	3.323	6.82	-13228	-23228	-33228	-43228
2.001	2.250	1.938	3.573	7.07	-13232	-23232	-33232	-43232

THIS DOCUMENT IS BEING PROVIDED BY ABBOTT AEROSPACE
Downloaded from http://www.everyspec.com
TECHNICAL LIBRARY
ABBOTTAEROSPACE.COM

THIS DOCUMENT PROVIDED BY THE ABBOTT AEROSPACE
TECHNICAL LIBRARY
Downloaded from http://www.everyspec.com
ABBOTTAEROSPACE.COM

SECTION 431

PIN, SWAGE LOCKING, STEEL, 100° CROWN HEAD, TENSION, PULL-TYPE

APPLICABLE DOCUMENT: NAS6935 THRU 6942

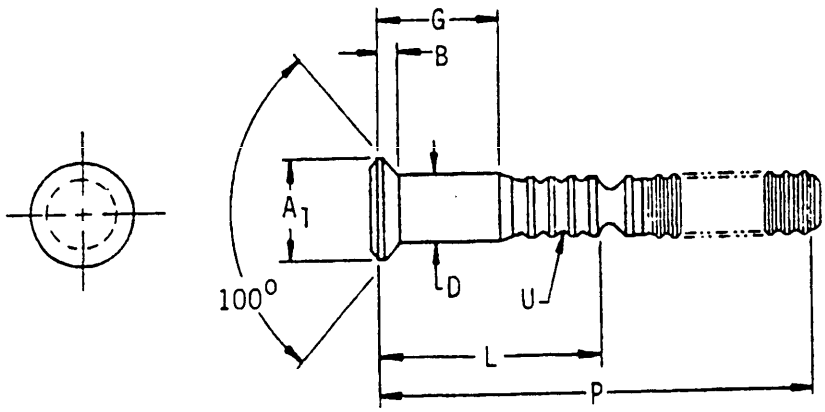

Material	Protective finish	Tensile strength (psi) min
Alloy steel AISI-4140 or 4340 or 8740	Cadmium plate or nickel-cadmium plating	77,900

TABLE I. Pin-rivet, groove, configuration part numbers.

D Nom size	A_1 Min dia	B Ref	U 1/	Basic part number
.164	.229	.036	4	NAS6935
.190	.269	.045	4	NAS6936
.250	.361	.061	4	NAS6938
.312	.440	.073	5	NAS6940
.375	.537	.086	5	NAS6942

1/ Number of locking grooves.

TABLE II. NAS6935, 6936, 6938, 6940 and 6942 Dash numbers.

G	Grip range		.164 Dia		.190 Dia		.250 Dia		.312 Dia		.375 Dia		Grip dash number
	Min	Max	L	P	L	P	L	P	L	P	L	P	
.125	.095	.156	.313	1.50	.358	1.44	.437	1.88	-	-	-	-	02
.188	.157	.219	.376	1.62	.421	1.56	.499	2.00	.627	1.94	.734	2.12	03
.250	.220	.281	.438	1.75	.483	1.69	.562	2.12	.690	2.06	.797	2.25	04
.312	.282	.344	.501	1.88	.546	1.81	.624	2.25	.752	2.19	.859	2.38	05
.375	.345	.406	.563	2.00	.608	1.94	.687	2.38	.815	2.31	.922	2.50	06
.438	.407	.469	.626	2.12	.671	2.06	.749	2.50	.877	2.44	.984	2.62	07
.500	.470	.531	.688	2.25	.733	2.19	.812	2.62	.940	2.56	1.047	2.75	08
.562	.532	.594	.751	2.38	.796	2.31	.874	2.75	1.002	2.69	1.109	2.88	09
.625	.595	.656	.813	1.88	.858	2.44	.937	2.88	1.065	2.81	1.172	3.00	10
.688	.657	.719	.876	1.94	.921	2.56	.999	3.00	1.127	2.94	1.234	3.12	11
.750	.720	.781	.938	2.00	.983	2.69	1.062	3.12	1.190	3.06	1.297	3.25	12
.812	.782	.844	1.001	2.06	1.046	2.81	1.124	3.25	1.252	3.06	1.359	3.25	13
.875	.845	.906	1.063	2.12	1.108	2.94	1.187	3.25	1.315	3.06	1.422	3.25	14
.938	.907	.969	1.126	2.19	1.171	3.06	1.249	3.25	1.377	3.06	1.484	3.25	15
1.000	.970	1.031	1.188	2.25	1.233	3.19	1.312	3.25	1.440	3.06	1.547	3.25	16
1.062	1.032	1.094	1.251	2.31	1.296	3.19	1.374	3.25	1.502	3.06	1.609	3.25	17
1.125	1.095	1.156	1.313	2.38	1.358	3.19	1.437	3.25	1.565	3.06	1.672	3.25	18
1.188	1.157	1.219	1.376	2.44	1.421	3.19	1.499	3.25	1.627	3.06	1.734	3.25	19
1.250	1.220	1.281	1.438	2.50	1.483	3.19	1.562	3.25	1.690	3.06	1.797	3.25	20
1.312	1.282	1.344	1.501	2.56	1.546	3.19	1.624	3.25	1.752	3.06	1.859	3.25	21
1.375	1.345	1.406	1.563	2.62	1.608	3.19	1.687	3.25	1.815	3.06	1.922	3.25	22
1.438	1.407	1.469	-	-	1.671	3.19	1.749	3.25	1.877	3.06	1.984	3.25	23
1.500	1.470	1.531	-	-	1.733	3.19	1.812	3.25	1.940	3.06	2.047	3.25	24
1.562	1.532	1.594	-	-	1.796	3.19	1.874	3.25	2.002	3.12	2.109	3.31	25
1.625	1.595	1.656	-	-	1.858	3.19	1.937	3.25	2.065	3.19	2.172	3.38	26
1.688	1.657	1.719	-	-	1.921	3.19	1.999	3.31	2.127	3.25	2.234	3.44	27
1.750	1.720	1.781	-	-	1.983	3.19	2.062	3.38	2.190	3.31	2.297	3.50	28
1.812	1.782	1.844	-	-	2.046	3.19	2.124	3.44	2.252	3.38	2.359	3.56	29
1.875	1.845	1.906	-	-	2.108	3.19	2.187	3.50	2.315	3.44	2.422	3.62	30
1.938	1.907	1.969	-	-	2.171	3.19	2.249	3.56	2.377	3.50	2.484	3.69	31
2.000	1.970	2.031	-	-	2.233	3.19	2.312	3.62	2.440	3.56	2.547	3.75	32

NOTES: 1. For collar selection, see NAS1080.
2. Add "N" after basic part number for Nickel-Cadmium plate.

THIS DOCUMENT WAS DOWNLOADED FROM http://www.everyspec.com
TECHNICAL LIBRARY
ABBOTTAEROSPACE.COM

THIS DOCUMENT PROVIDED BY THE ABBOTT AEROSPACE
Downloaded from http://www.everyspec.com
TECHNICAL LIBRARY
ABBOTTAEROSPACE.COM

SECTION 432

PIN, SWAGE LOCKING, STEEL, 100° HEAD, TENSION, STUMP-TYPE

APPLICABLE DOCUMENT: NAS1486 THRU 1492, NAS6925 THRU 6932

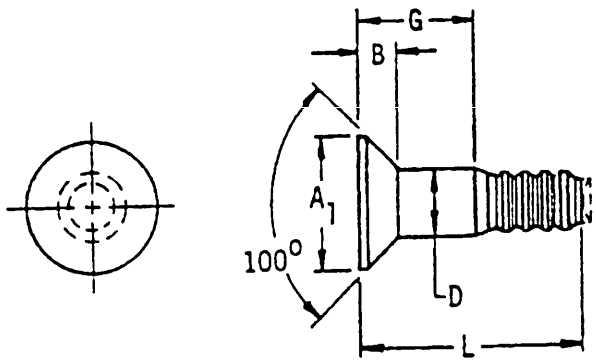

Material	Protective finish	Tensile strength (psi) min
Alloy steel AISI-4140 or 4340 or 8740	Cadmium plate or nickel-cadmium plating	77,900

THIS DOCUMENT PROVIDED BY THE ABBOTT AEROSPACE
Downloaded from http://www.everyspec.com
TECHNICAL LIBRARY
ABBOTTAEROSPACE.COM

TABLE I. Part numbers.

D Nom size.....	.164	.190		.250		.312		.375	
A_1 Min dia	.263	.316	.344	.428	.455	.508	.574	.629	.693
B Max.....	.055	.071	.084	.048	.110	.109	.137	.137	.165
NAS Document No.	6925	6926	1486	6928	1488	6930	1490	6932	1492

G	Grip Range		L					NAS6925, 6926 6928, 6930 and 6932 Dash no.	NAS1486, 1488 1490 and 1492 Dash no.
	Min	Max	Lengths						
.125	.095	.156	.324	.373	.456	-	-	-02	02
.188	.157	.219	.387	.435	.519	.602	.697	-03	03
.250	.220	.281	.449	.498	.581	.664	.760	-04	04
.312	.282	.344	.512	.560	.644	.727	.822	-05	05
.375	.345	.406	.574	.623	.706	.789	.885	-06	06
.438	.407	.469	.637	.685	.769	.852	.947	-07	07
.500	.470	.531	.699	.748	.831	.914	1.010	-08	08
.562	.532	.594	.762	.810	.894	.976	1.072	-09	09
.625	.595	.656	.824	.873	.956	1.039	1.135	-10	10
.688	.657	.719	.887	.935	1.019	1.101	1.197	-11	11
.750	.720	.781	.949	.998	1.081	1.164	1.260	-12	12
.812	.782	.844	1.012	1.060	1.144	1.226	1.322	-13	13
.875	.845	.906	1.074	1.123	1.206	1.289	1.385	-14	14
.938	.907	.969	1.137	1.185	1.269	1.351	1.447	-15	15
1.000	.970	1.031	1.199	1.248	1.331	1.414	1.510	-16	16
1.062	1.032	1.094	1.262	1.310	1.394	1.476	1.572	-17	17
1.125	1.095	1.156	1.324	1.373	1.456	1.539	1.635	-18	18
1.188	1.157	1.219	1.387	1.435	1.519	1.602	1.697	-19	19
1.250	1.220	1.281	1.449	1.498	1.581	1.664	1.760	-20	20
1.312	1.282	1.344	1.512	1.560	1.644	1.727	1.822	-21	21
1.375	1.345	1.406	1.574	1.623	1.706	1.789	1.885	-22	22
1.438	1.407	1.469	1.637	1.685	1.769	1.852	1.947	-23	23
1.500	1.470	1.531	1.699	1.748	1.831	1.914	2.010	-24	24
1.562	1.532	1.594	1.762	1.810	1.894	1.976	2.072	-25	---
1.625	1.595	1.656	1.824	1.873	1.956	2.039	2.135	-26	---
1.688	1.657	1.719	1.887	1.935	2.019	2.101	2.197	-27	---
1.750	1.720	1.781	1.949	1.998	2.081	2.164	2.260	-28	---
1.812	1.782	1.844	2.012	2.060	2.144	2.226	2.322	-29	---
1.875	1.845	1.906	2.074	2.123	2.206	2.289	2.385	-30	---
1.938	1.907	1.969	2.137	2.185	2.269	2.351	2.447	-31	---
2.000	1.970	2.031	2.199	2.248	2.331	2.414	2.510	-32	

NOTES: 1. For collar selection, see NAS1080.
2. Add "N" after basic part number for Nickel-Cadmium plate.

THIS DOCUMENT PROVIDED BY THE ABBOTT AEROSPACE
TECHNICAL LIBRARY
ABBOTTAEROSPACE.COM
Downloaded from http://www.everyspec.com

SECTION 433

PIN, SWAGE LOCKING, STEEL, 100°SHEAR HEAD, STUMP-TYPE

APPLICABLE DOCUMENT: NAS1414 THRU 1422

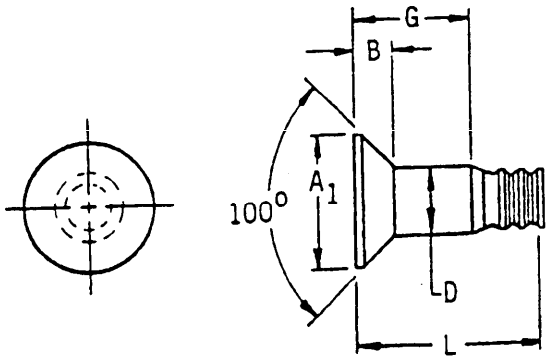

Material	Protective finish	Shear strength (psi) min
Alloy steel AISI 4140 or 4340 or 8740	Cadmium plate or nickel-cadmium plating	92,400

TABLE I. Pin-rivet, groove, configuration part numbers.

D Nom size	A_1 Min dia	B Max	Basic part number
.125	.180	.037	NAS1414
.156	.220	.042	NAS1415
.190	.263	.049	NAS1416
.250	.346	.063	NAS1418
.312	.417	.071	NAS1420
.375	.496	.081	NAS1422

THIS DOCUMENT PROVIDED BY THE ABBOTT AEROSPACE
Downloaded from http://www.everyspec.com
TECHNICAL LIBRARY
ABBOTTAEROSPACE.COM

TABLE II. NAS1414, 1415, 1416, 1418, 1420 and 1422 Dash numbers.

G	Grip range		L						Grip dash number
	Min	Max	.125 Dia	.156 Dia	.190 Dia	.250 Dia	.312 Dia	.375 Dia	
.062	1/	.062	.201	.236	.261	-	-	-	01
.125	.063	.125	.263	.298	.323	.376	.395	.438	02
.188	.126	.188	.326	.361	.386	.439	.458	.501	03
.250	.189	.250	.388	.423	.448	.501	.520	.563	04
.312	.251	.312	.451	.486	.511	.564	.583	.626	05
.375	.313	.375	.513	.548	.574	.626	.645	.688	06
.438	.376	.438	.576	.611	.637	.689	.708	.751	07
.500	.439	.500	.638	.673	.699	.751	.770	.813	08
.562	.501	.562	.701	.736	.762	.814	.833	.876	09
.625	.563	.625	.763	.798	.824	.876	.895	.938	10
.688	.626	.688	.826	.861	.887	.939	.958	1.001	11
.750	.689	.750	.888	.923	.949	1.001	1.020	1.063	12
.812	.751	.812	.951	.986	1.012	1.064	1.083	1.126	13
.875	.813	.875	1.013	1.048	1.074	1.126	1.145	1.188	14
.938	.876	.938	1.076	1.111	1.137	1.189	1.208	1.251	15
1.000	.939	1.000	1.138	1.173	1.199	1.251	1.270	1.313	16
1.062	1.001	1.062	-	-	1.261	1.314	1.333	1.376	17
1.125	1.063	1.125	-	-	1.323	1.376	1.395	1.438	18
1.188	1.126	1.188	-	-	1.386	1.439	1.458	1.501	19
1.250	1.189	1.250	-	-	1.448	1.501	1.520	1.563	20
1.312	1.251	1.312	-	-	1.511	1.564	1.583	1.626	21
1.375	1.313	1.375	-	-	1.574	1.626	1.645	1.688	22
1.438	1.376	1.438	-	-	1.637	1.689	1.708	1.751	23
1.500	1.439	1.500	-	-	1.699	1.751	1.770	1.813	24
1.562	1.501	1.562	-	-	1.762	1.814	1.833	1.876	25
1.625	1.563	1.625	-	-	1.824	1.876	1.895	1.938	26
1.688	1.626	1.688	-	-	1.887	1.939	1.958	2.001	27
1.750	1.689	1.750	-	-	1.949	2.001	2.020	2.063	28
1.812	1.751	1.812	-	-	2.012	2.064	2.083	2.126	29
1.875	1.813	1.875	-	-	2.074	2.126	2.145	2.188	30
1.938	1.876	1.938	-	-	2.137	2.189	2.208	2.251	31
2.000	1.939	2.000	-	-	2.199	2.251	2.270	2.313	32

1/ Minimum grip for -01 varies with material to be fastened together.

NOTES:

1. For collar selection, see NAS1080.
2. Use NAS1080 AG (2219 Al alloy) collars in application up to 450° F. For increase temperature requirement use NAS1080 UK (A286 Cres) collars.
3. Do not use these parts in Titanium structure.
4. Add "N" after basic part number for Nickel-Cadmium plate.

THIS DOCUMENT PROVIDED BY THE ABBOTT AEROSPACE
Downloaded from http://www.everyspec.com
TECHNICAL LIBRARY
ABBOTTAEROSPACE.COM

SECTION 434

PIN, SWAGE LOCKING, STEEL, PROTRUDING HEAD, SHEAR, STUMP-TYPE

APPLICABLE DOCUMENT: NAS1424 THRU 1432

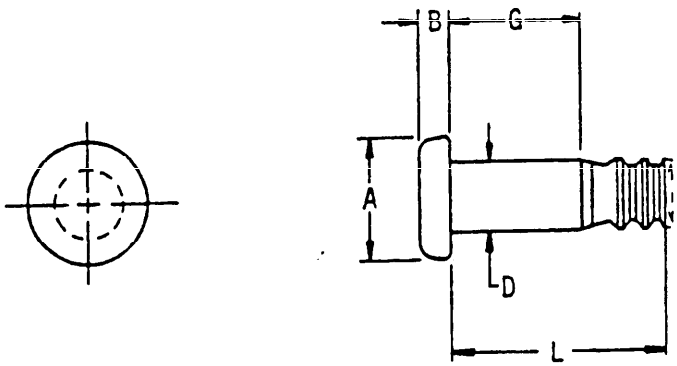

Material	Protective finish	Shear strength (psi) min
Alloy steel AISI 4140 or 4340 or 8740	Cadmium plate or nickel-cadmium plating	92,400

TABLE I. Pin-rivet, groove, configuration part numbers.

D Nom size	A Dia	B	Basic part number
.125	.195 .181	.040 .028	NAS1424
.156	.249 .235	.048 .036	NAS1425
.190	.302 .288	.056 .044	NAS1426
.250	.377 .363	.070 .058	NAS1428
.312	.471 .455	.079 .067	NAS1430
.375	.565 .549	.089 .077	NAS1432

THIS DOCUMENT PROVIDED BY THE ABBOTT AEROSPACE
Downloaded from http://www.everyspec.com
TECHNICAL LIBRARY
ABBOTTAEROSPACE.COM

TABLE II. NAS1424, 1425, 1426, 1428, 1430 and 1432 Dash numbers.

G	Grip range		L					Grip dash number
	Min	Max	.125 Dia	.156 Dia	.190 Dia	.250 Dia	.312 Dia	
.062	.020	.062	.201	.236	.261	-	-	01
.125	.063	.125	.263	.298	.323	.376	.395	02
.188	.126	.188	.326	.361	.386	.439	.458	03
.250	.189	.250	.388	.423	.448	.501	.520	04
.312	.251	.312	.451	.486	.511	.564	.583	05
.375	.313	.375	.513	.548	.574	.626	.645	06
.438	.376	.438	.576	.611	.637	.689	.708	07
.500	.439	.500	.638	.673	.699	.751	.770	08
.562	.501	.562	.701	.736	.762	.814	.833	09
.625	.563	.625	.763	.798	.824	.876	.895	10
.688	.626	.688	.826	.861	.887	.939	.958	11
.750	.689	.750	.888	.923	.949	1.001	1.020	12
.812	.751	.812	.951	.986	1.012	1.064	1.083	13
.875	.813	.875	1.013	1.048	1.074	1.126	1.145	14
.938	.876	.938	1.076	1.111	1.137	1.189	1.208	15
1.000	.939	1.000	1.138	1.173	1.199	1.251	1.270	16
1.062	1.001	1.062	-	-	1.261	1.314	1.333	17
1.125	1.063	1.125	-	-	1.323	1.376	1.395	18
1.188	1.126	1.188	-	-	1.386	1.439	1.458	19
1.250	1.189	1.250	-	-	1.448	1.501	1.520	20
1.312	1.251	1.312	-	-	1.511	1.564	1.583	21
1.375	1.313	1.375	-	-	1.574	1.626	1.645	22
1.438	1.376	1.438	-	-	1.637	1.689	1.708	23
1.500	1.439	1.500	-	-	1.699	1.751	1.770	24
1.562	1.501	1.562	-	-	1.762	1.814	1.833	25
1.625	1.563	1.625	-	-	1.824	1.876	1.895	26
1.688	1.626	1.688	-	-	1.887	1.939	1.958	27
1.750	1.689	1.750	-	-	-	-	-	28
1.812	1.751	1.812	-	-	-	-	-	29
1.875	1.813	1.875	-	-	-	-	-	30
1.938	1.876	1.938	-	-	-	-	-	31
2.000	1.939	2.000	-	-	-	-	-	32

NOTES:

1. For collar selection, see NAS 1080.
2. Use NAS1080 AG (2219 A1 alloy) collars in application up to 450° F. For increase temperature requirements use NAS1080 UK (A286 Cres) collars.
3. Do not use these parts in Titanium structure.
4. Add "N" after basic part number for Nickel-Cadmium plate.

THIS DOCUMENT PROVIDED BY THE ABBOTT AEROSPACE
Downloaded from http://www.everyspec.com
TECHNICAL LIBRARY
ABBOTTAEROSPACE.COM

SECTION 435

PIN, SWAGE LOCKING, STEEL, PROTRUDING HEAD, TENSION, STUMP-TYPE

APPLICABLE DOCUMENT: NAS1496 THRU 1502

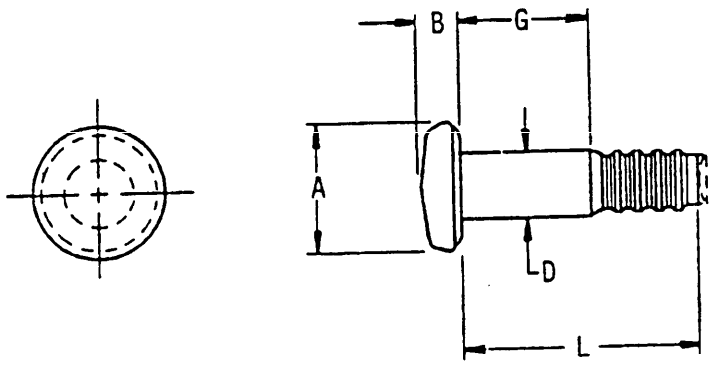

Material	Protective finish	Tensile strength (psi) min
Alloy steel AISI 4140 or 4340 or 8740	Cadmium plate or nickel-cadmium plating	77,900

TABLE I. Pin-rivet, groove, configuration.

D Nom size	A Dia	B	Basic part number
.164	.270 .255	.072 .062	NAS1497
.190	.317 .302	.088 .078	NAS1496
.250	.411 .396	.113 .103	NAS1498
.312	.515 .500	.140 .130	NAS1500
.375	.628 .613	.167 .157	NAS1502

THIS DOCUMENT PROVIDED BY THE ABBOTT AEROSPACE
Downloaded from http://www.everyspec.com
TECHNICAL LIBRARY
ABBOTTAEROSPACE.COM

TABLE II. NAS1496, 1497, 1498, 1500 and 1502 Dash numbers.

G	Grip range		L					Grip dash number
	Min	Max	.164 Dia	.190 Dia	.250 Dia	.312 Dia	.375 Dia	
.062	.031	.094	.262	.310	-	-	-	01
.125	.095	.156	.324	.373	.456	.539	.635	02
.188	.157	.219	.387	.435	.519	.602	.697	03
.250	.220	.281	.449	.498	.581	.664	.760	04
.312	.282	.344	.512	.560	.644	.727	.822	05
.375	.345	.406	.574	.623	.706	.789	.885	06
.438	.407	.469	.637	.685	.769	.852	.947	07
.500	.470	.531	.699	.748	.831	.914	1.010	08
.562	.532	.594	.762	.810	.894	.976	1.072	09
.625	.595	.656	.824	.873	.956	1.039	1.135	10
.688	.657	.719	.887	.935	1.019	1.101	1.197	11
.750	.720	.781	.949	.998	1.081	1.164	1.260	12
.812	.782	.844	1.012	1.060	1.144	1.226	1.322	13
.875	.845	.906	1.074	1.123	1.206	1.289	1.385	14
.938	.907	.969	1.137	1.185	1.269	1.351	1.447	15
1.000	.970	1.031	1.199	1.248	1.331	1.414	1.510	16
1.062	1.032	1.094	1.262	1.310	1.394	1.476	1.572	17
1.125	1.095	1.156	1.324	1.373	1.456	1.539	1.635	18
1.188	1.157	1.219	1.387	1.435	1.519	1.602	1.697	19
1.250	1.220	1.281	1.449	1.498	1.581	1.664	1.760	20
1.312	1.282	1.344	1.512	1.560	1.644	1.727	1.822	21
1.375	1.345	1.406	1.574	1.623	1.706	1.789	1.885	22
1.438	1.407	1.469	1.637	1.685	1.769	1.852	1.947	23
1.500	1.470	1.531	1.699	1.748	1.831	1.914	2.010	24
1.562	1.532	1.594	1.762	1.810	1.894	1.976	2.072	25
1.625	1.595	1.656	1.824	1.873	1.956	2.039	2.135	26
1.688	1.657	1.719	1.887	1.935	2.019	2.101	2.197	27
1.750	1.720	1.781	1.949	1.998	2.081	2.164	2.260	28

NOTES: 1. For collar selection, see NAS1080.
2. Add "N" after basic part number for Nickel-Cadmium plate.

THIS DOCUMENT PROVIDED BY THE ABBOTT AEROSPACE
Downloaded from http://www.everyspec.com
TECHNICAL LIBRARY
ABBOTTAEROSPACE.COM

SECTION 436

PIN, SWAGE LOCKING, STEEL, 100° HEAD (MS20426), TENSION, PULL-TYPE

APPLICABLE DOCUMENT: NAS1475 THRU 1482

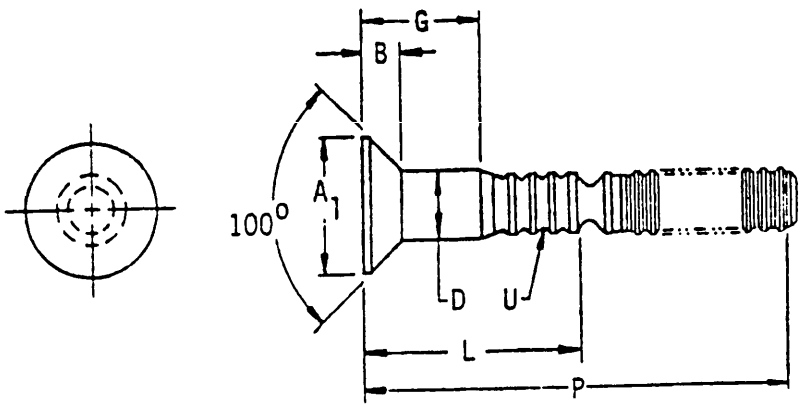

Material	Protective finish	Tensile strength (psi) min
Alloy steel AISI-4140 or 4340 or 8740	Cadmium plate or nickel-cadmium plating	77,900

TABLE I. Pin-rivet, groove, configuration.

D Nom size	A_1 Min dia	B Max	U 1/	Basic part number
.164	.263	.055	4	NAS1475
.190	.316	.071	4	NAS1476
.250	.428	.098	4	NAS1478

1/ Number of locking grooves.

THIS DOCUMENT PROVIDED BY THE ABBOTT AEROSPACE
Downloaded from http://www.everyspec.com
TECHNICAL LIBRARY
ABBOTTAEROSPACE.COM

TABLE II. NAS1475, 1476 and 1478 Dash numbers.

G	Grip range		.164 Dia		.190 & .203 Dia		.250 & .266 Dia		Grip dash number
	Min	Max	L	P	L	P	L	P	
.125	.095	.156	.313	1.50	.358	1.44	.437	1.88	02
.188	.157	.219	.376	1.62	.421	1.56	.499	2.00	03
.250	.220	.281	.438	1.75	.483	1.69	.562	2.12	04
.312	.282	.344	.501	1.88	.546	1.81	.624	2.25	05
.375	.345	.406	.563	2.00	.608	1.94	.687	2.38	06
.438	.407	.469	.626	2.12	.671	2.06	.749	2.50	07
.500	.470	.531	.688	2.25	.733	2.19	.812	2.62	08
.562	.532	.594	.751	2.38	.796	2.31	.874	2.75	09
.625	.595	.656	.813	1.88	.858	2.44	.937	2.88	10
.688	.657	.719	.876	1.94	.921	2.56	.999	3.00	11
.750	.720	.781	.938	2.00	.983	2.69	1.062	3.12	12
.812	.782	.844	1.001	2.06	1.046	2.81	1.124	3.25	13
.875	.845	.906	1.063	2.12	1.108	2.94	1.187	3.25	14
.938	.907	.969	1.126	2.19	1.171	3.06	1.249	3.25	15
1.000	.970	1.031	1.188	2.25	1.233	3.19	1.312	3.25	16
1.062	1.032	1.094	1.251	2.31	1.296	3.19	1.374	3.25	17
1.125	1.095	1.156	1.313	2.38	1.358	3.19	1.437	3.25	18
1.188	1.157	1.219	1.376	2.44	1.421	3.19	1.499	3.25	19
1.250	1.220	1.281	1.438	2.50	1.483	3.19	1.562	3.25	20
1.312	1.282	1.344	1.501	2.56	1.546	3.19	1.624	3.25	21
1.375	1.345	1.406	1.563	2.62	1.608	3.19	1.687	3.25	22
1.438	1.407	1.469	-	-	1.671	3.19	1.749	3.25	23
1.500	1.470	1.531	-	-	1.733	3.19	1.812	3.25	24
1.562	1.532	1.594	-	-	1.796	3.19	1.874	3.25	25
1.625	1.595	1.656	-	-	1.858	3.19	1.937	3.25	26
1.688	1.657	1.719	-	-	1.921	3.19	1.999	3.31	27
1.750	1.720	1.781	-	-	1.983	3.19	2.062	3.38	28
1.812	1.782	1.844	-	-	2.046	3.19	2.124	3.44	29
1.875	1.845	1.906	-	-	2.108	3.19	2.187	3.50	30
1.938	1.907	1.969	-	-	2.171	3.19	2.249	3.56	31
2.000	1.970	2.031	-	-	2.233	3.19	2.312	3.62	32

NOTES: 1. For collar selection, see NAS1080.
2. Add "N" after basic part number for Nickel-Cadmium plate.

THIS DOCUMENT PROVIDED BY THE ABBOTT AEROSPACE
Downloaded from http://www.everyspec.com
TECHNICAL LIBRARY
ABBOTTAEROSPACE.COM

SECTION 437

PIN, SWAGE LOCKING, STEEL, 100° HEAD (MS24694), TENSION, PULL-TYPE

APPLICABLE DOCUMENT: NAS1456 THRU 1462

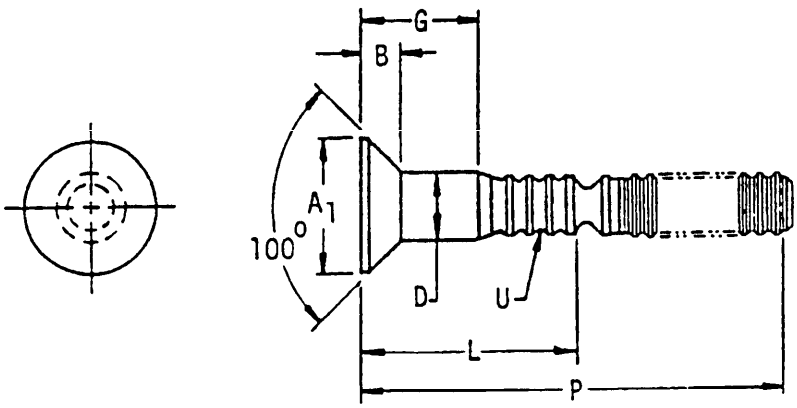

Material	Protective finish	Tensile strength (psi) min
Alloy steel AISI-4140 or 4340 or 8740	Cadmium plate or nickel-cadmium plating	77,900

TABLE I. Pin-rivet, groove, configuration.

D Nom size	A_1 min dia	B max	U 1/	Basic part number
.190	.344	.084	4	NAS1456
.250	.455	.110	4	NAS1458
.312	.574	.137	5	NAS1460
.375	.693	.165	5	NAS1462

1/ Number of locking grooves.

TABLE II. NAS1456, 1458, 1460 and 1462 Dash numbers.

G	Grip range		.190 Dia		.250 Dia		.312 Dia		.375 Dia		Grip dash number
	Min	Max	L	P	L	P	L	P	L	P	
.125	.095	.156	.358	1.44	.437	1.88	-	-	-	-	02
.188	.157	.219	.421	1.56	.499	2.00	.627	1.94	.734	2.12	03
.250	.220	.281	.483	1.69	.562	2.12	.690	2.06	.797	2.25	04
.312	.282	.344	.546	1.81	.624	2.25	.752	2.19	.859	2.38	05
.375	.345	.406	.608	1.94	.687	2.38	.815	2.31	.922	2.50	06
.438	.407	.469	.671	2.06	.749	2.50	.877	2.44	.984	2.62	07
.500	.470	.531	.733	2.19	.812	2.62	.940	2.56	1.047	2.75	08
.562	.532	.594	.796	2.31	.874	2.75	1.002	2.69	1.109	2.88	09
.625	.595	.656	.858	2.44	.937	2.88	1.065	2.81	1.172	3.00	10
.688	.657	.719	.921	2.56	.999	3.00	1.127	2.94	1.234	3.12	11
.750	.720	.781	.983	2.69	1.062	3.12	1.190	3.06	1.297	3.25	12
.812	.782	.844	1.046	2.81	1.124	3.25	1.252	3.06	1.359	3.25	13
.875	.845	.906	1.108	2.94	1.187	3.25	1.315	3.06	1.422	3.25	14
.938	.907	.969	1.171	3.06	1.249	3.25	1.377	3.06	1.484	3.25	15
1.000	.970	1.031	1.233	3.19	1.312	3.25	1.440	3.06	1.547	3.25	16
1.062	1.032	1.094	1.296	3.19	1.374	3.25	1.502	3.06	1.609	3.25	17
1.125	1.095	1.156	1.358	3.19	1.437	3.25	1.565	3.06	1.672	3.25	18
1.188	1.157	1.219	1.421	3.19	1.499	3.25	1.627	3.06	1.734	3.25	19
1.250	1.220	1.281	1.483	3.19	1.562	3.25	1.690	3.06	1.797	3.25	20
1.312	1.282	1.344	1.546	3.19	1.624	3.25	1.752	3.06	1.859	3.25	21
1.375	1.345	1.406	1.608	3.19	1.687	3.25	1.815	3.06	1.922	3.25	22
1.438	1.407	1.469	1.671	3.19	1.749	3.25	1.877	3.06	1.984	3.25	23
1.500	1.470	1.531	1.733	3.19	1.812	3.25	1.940	3.06	2.047	3.25	24
1.562	1.532	1.594	1.796	3.19	1.874	3.25	2.002	3.12	2.109	3.31	25
1.625	1.595	1.656	1.858	3.19	1.937	3.25	2.065	3.19	2.172	3.38	26
1.688	1.657	1.719	1.921	3.19	1.999	3.31	2.127	3.25	2.234	3.44	27
1.750	1.720	1.781	1.983	3.19	2.062	3.38	2.190	3.31	2.297	3.50	28
1.812	1.782	1.844	2.046	3.19	2.124	3.44	2.252	3.38	2.359	3.56	29
1.875	1.845	1.906	2.108	3.19	2.187	3.50	2.315	3.44	2.422	3.62	30
1.938	1.907	1.969	2.171	3.19	2.249	3.56	2.377	3.50	2.484	3.69	31
2.000	1.970	2.031	2.233	3.19	2.312	3.62	2.440	3.56	2.547	3.75	32

NOTES: 1. For collar selection, see NAS1080.
2. Add "N" after basic part number for Nickel-Cadmium plate.

THIS DOCUMENT PROVIDED BY THE ABBOTT AEROSPACE
Downloaded from http://www.everyspec.com
TECHNICAL LIBRARY
ABBOTTAEROSPACE.COM

THIS DOCUMENT PROVIDED BY THE ABBOTT AEROSPACE
Downloaded from http://www.everyspec.com
TECHNICAL LIBRARY
ABBOTTAEROSPACE.COM

SECTION 438

PIN, SWAGE LOCKING, STEEL, 100° SHEAR HEAD, PULL-TYPE

APPLICABLE DOCUMENT: NAS1436 THRU 1441

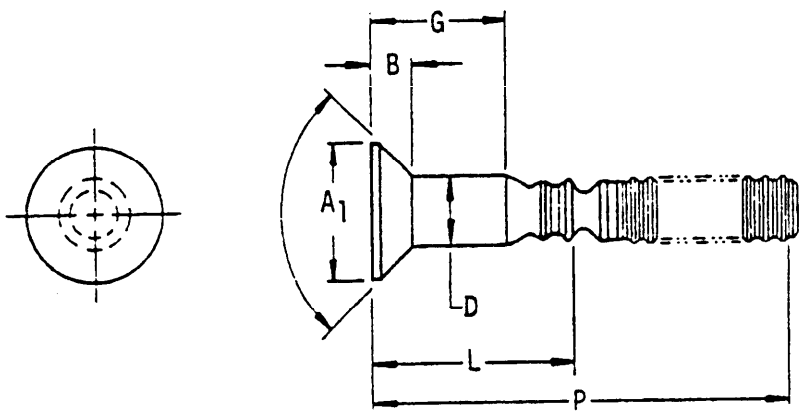

Material	Protective finish	Shear strength (psi) min
Alloy steel AISI 4140 or 4340 or 8740	Cadmium plate or nickel-cadmium plating	92,400

TABLE I. Pin-rivet, groove, configuration.

D Nom size	A_1 Min dia	B Max	Basic part number
.190	.263	.049	NAS1436
.250	.346	.063	NAS1438
.312	.417	.071	NAS1440
.375	.496	.081	NAS1442

TABLE II. NAS1436, 1438, 1440 and 1442 Dash numbers.

G	Grip range		.190 Dia		.250 Dia		.312 Dia		.375 Dia		Grip dash number
	Min	Max	L	P	L	P	L	P	L	P	
.125	.062	.125	.319	1.38	-	-	-	-	-	-	02
.188	.126	.188	.381	1.50	.433	1.91	.458	1.81	.509	1.94	03
.250	.189	.250	.444	1.62	.496	2.03	.521	1.94	.572	2.06	04
.312	.251	.312	.506	1.75	.558	2.16	.583	2.06	.634	2.19	05
.375	.313	.375	.569	1.88	.621	2.28	.646	2.19	.697	2.31	06
.438	.376	.438	.631	2.00	.683	2.41	.708	2.31	.759	2.44	07
.500	.439	.500	.694	2.12	.746	2.53	.771	2.44	.822	2.56	08
.562	.501	.562	.756	2.25	.808	2.66	.833	2.56	.884	2.69	09
.625	.563	.625	.819	2.38	.871	2.78	.896	2.69	.947	2.81	10
.688	.626	.688	.881	2.50	.933	2.91	.958	2.81	1.009	2.94	11
.750	.689	.750	.944	2.62	.996	3.03	1.021	2.94	1.072	3.06	12
.812	.751	.812	1.006	2.75	1.058	3.16	1.083	2.94	1.134	3.06	13
.875	.813	.875	1.069	2.88	1.121	3.16	1.146	2.94	1.197	3.06	14
.938	.876	.938	1.131	3.00	1.183	3.16	1.208	2.94	1.259	3.06	15
1.000	.939	1.000	1.194	3.12	1.246	3.16	1.271	2.94	1.322	3.06	16
1.062	1.001	1.062	1.256	3.12	1.308	3.16	1.333	2.94	1.384	3.06	17
1.125	1.063	1.125	1.319	3.12	1.371	3.16	1.396	2.94	1.447	3.06	18
1.188	1.126	1.188	1.381	3.12	1.433	3.16	1.458	2.94	1.509	3.06	19
1.250	1.189	1.250	1.444	3.12	1.496	3.16	1.521	2.94	1.572	3.06	20
1.312	1.251	1.312	1.506	3.12	1.558	3.16	1.583	2.94	1.634	3.06	21
1.375	1.313	1.375	1.569	3.12	1.621	3.16	1.646	2.94	1.697	3.06	22
1.438	1.376	1.438	1.631	3.12	1.683	3.16	1.708	2.94	1.759	3.06	23
1.500	1.439	1.500	1.694	3.12	1.746	3.16	1.771	2.94	1.822	3.06	24
1.562	1.501	1.562	1.756	3.12	1.808	3.16	1.833	3.00	1.884	3.12	25
1.625	1.563	1.625	1.819	3.12	1.871	3.16	1.896	3.06	1.947	3.19	26
1.688	1.626	1.688	1.881	3.12	1.933	3.22	1.958	3.12	2.009	3.25	27
1.750	1.689	1.750	1.944	3.12	1.996	3.28	2.021	3.19	2.072	3.31	28
1.812	1.751	1.812	2.006	3.12	2.058	3.34	2.083	3.25	2.134	3.38	29
1.875	1.813	1.875	2.069	3.12	2.121	3.41	2.146	3.31	2.197	3.44	30
1.938	1.876	1.938	2.131	3.12	2.183	3.47	2.208	3.38	2.259	3.50	31
2.000	1.939	2.000	2.194	3.12	2.246	3.53	2.271	3.44	2.322	3.56	32

NOTES:
1. For collar selection, see NAS1080.
2. Use NAS1080 AG (2219 Al alloy) collars in application up to 450° F.
3. Do not use these parts in Titanium structure.
4. Add "N" after basic part number for Nickel-Cadmium plate.

This Document Provided by ABBOTT AEROSPACE
Downloaded from http://www.everyspec.com
TECHNICAL LIBRARY
ABBOTTAEROSPACE.COM

THIS DOCUMENT PROVIDED BY THE ABBOTT AEROSPACE
Downloaded from http://www.everyspec.com
TECHNICAL LIBRARY
ABBOTTAEROSPACE.COM

SECTION 439

PIN, SWAGE LOCKING, STEEL, PROTRUDING HEAD, SHEAR, PULL-TYPE

APPLICABLE DOCUMENT: NAS1446 THRU 1452

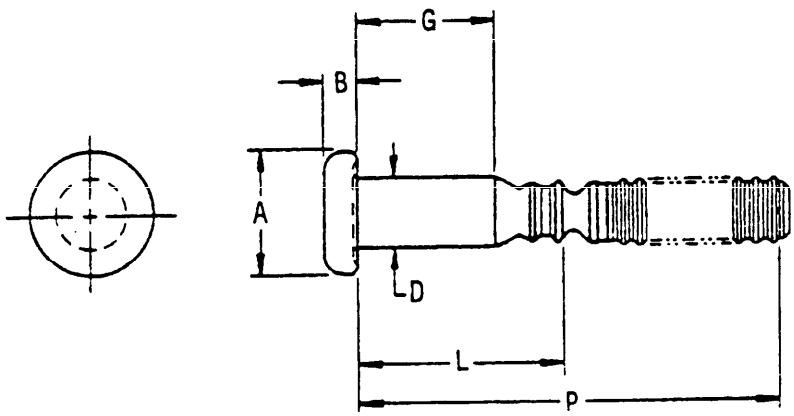

Material	Protective finish	Shear strength (psi) min
Alloy steel AISI 4140 or 4340 or 8740	Cadmium plate or nickel-cadmium plating	92,400

TABLE I. Pin-rivet, groove, configuration.

D Nom size	A dia	B Max	Basic part number
.190	.302 .288	.063 .056	NAS1446
.250	.377 .363	.081 .074	NAS1448
.312	.471 .455	.100 .094	NAS1450
.375	.565 .549	.120 .113	NAS1452

TABLE II. NAS1446, 1448, 1450 and 1452 Dash numbers.

G	Grip range		.190 Dia		.250 Dia		.312 Dia		.375 Dia		Grip dash number
	Min	Max	L	P	L	P	L	P	L	P	
.062	.020	.062	.256	1.25	-	-	-	-	-	-	01
.125	.062	.125	.319	1.38	.371	1.78	.396	1.69	.447	1.81	02
.188	.126	.188	.381	1.50	.433	1.91	.458	1.81	.509	1.94	03
.250	.189	.250	.444	1.62	.496	2.03	.521	1.94	.572	2.06	04
.312	.251	.312	.506	1.75	.558	2.16	.583	2.06	.634	2.19	05
.375	.313	.375	.569	1.88	.621	2.28	.646	2.19	.697	2.31	06
.438	.376	.438	.631	2.00	.683	2.41	.708	2.31	.759	2.44	07
.500	.439	.500	.694	2.12	.746	2.53	.771	2.44	.822	2.56	08
.562	.501	.562	.756	2.25	.808	2.66	.833	2.56	.884	2.69	09
.625	.563	.625	.819	2.38	.871	2.78	.896	2.69	.947	2.81	10
.688	.626	.688	.881	2.50	.933	2.91	.958	2.81	1.009	2.94	11
.750	.689	.750	.944	2.62	.996	3.03	1.021	2.94	1.072	3.06	12
.812	.751	.812	1.006	2.75	1.058	3.16	1.083	2.94	1.134	3.06	13
.875	.813	.875	1.069	2.88	1.121	3.16	1.146	2.94	1.197	3.06	14
.938	.876	.938	1.131	3.00	1.183	3.16	1.208	2.94	1.259	3.06	15
1.000	.939	1.000	1.194	3.12	1.246	3.16	1.271	2.94	1.322	3.06	16
1.062	1.001	1.062	1.256	3.12	1.308	3.16	1.333	2.94	1.384	3.06	17
1.125	1.063	1.125	1.319	3.12	1.371	3.16	1.396	2.94	1.447	3.06	18
1.188	1.126	1.188	1.381	3.12	1.433	3.16	1.458	2.94	1.509	3.06	19
1.250	1.189	1.250	1.444	3.12	1.496	3.16	1.521	2.94	1.572	3.06	20
1.312	1.251	1.312	1.506	3.12	1.558	3.16	1.583	2.94	1.634	3.06	21
1.375	1.313	1.375	1.569	3.12	1.621	3.16	1.646	2.94	1.697	3.06	22
1.438	1.376	1.438	1.631	3.12	1.683	3.16	1.708	2.94	1.759	3.06	23
1.500	1.439	1.500	1.694	3.12	1.746	3.16	1.771	2.94	1.822	3.06	24
1.562	1.501	1.562	1.756	3.12	1.808	3.16	1.833	3.00	1.884	3.12	25
1.625	1.563	1.625	1.819	3.12	1.871	3.16	1.896	3.06	1.947	3.19	26
1.688	1.626	1.688	1.881	3.12	1.933	3.22	1.958	3.12	2.009	3.25	27
1.750	1.689	1.750	1.944	3.12	1.996	3.28	2.021	3.19	2.072	3.31	28
1.812	1.751	1.812	2.006	3.12	2.058	3.34	2.083	3.25	2.134	3.38	29
1.875	1.813	1.875	2.069	3.12	2.121	3.41	2.146	3.31	2.197	3.44	30
1.938	1.876	1.938	2.131	3.12	2.183	3.47	2.208	3.38	2.259	3.50	31
2.000	1.939	2.000	2.194	3.12	2.246	3.53	2.271	3.44	2.322	3.56	32

NOTES:
1. For collar selection, see NAS1080.
2. Do not use these parts in Titanium structure.
3. Use NAS1080 AG (2219 Al alloy) collars in application up to 450° F.
4. Add "N" after basic part number for Nickel-Cadmium plate.

TECHNICAL LIBRARY
ABBOTTAEROSPACE.COM

THIS DOCUMENT PROVIDED BY THE ABBOTT AEROSPACE
Downloaded from http://www.everyspec.com
TECHNICAL LIBRARY
ABBOTTAEROSPACE.COM

SECTION 440

PIN, SWAGE LOCKING, STEEL, PROTRUDING HEAD, TENSION, PULL-TYPE

APPLICABLE DOCUMENT: NAS1465 THRU 1472

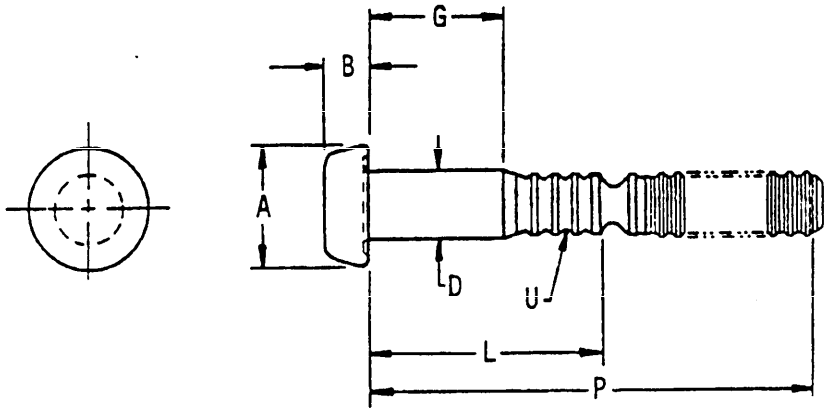

Material	Protective finish	Tensile strength (psi) min
Alloy steel AISI-4140 or 4340 or 8740	Cadmium plate or nickel-cadmium plating	77,900

TABLE I. Pin-rivet, groove, configuration.

D Nom size	A dia	B	U 1/	Basic part number
.164	.282 .258	.095 .085	4	NAS1465
.190	.327 .297	.111 .099	4	NAS1466
.250	.430 .390	.147 .128	4	NAS1468
.312	.535 .485	.184 .158	5	NAS1470
.375	.655 .595	.224 .194	5	NAS1472

1/ Number of locking grooves.

TABLE II. NAS1465, 1466, 1468, 1470 and 1472 Dash numbers.

G	Grip range		.164 Dia		.190 Dia		.250 Dia		.312 Dia		.375 Dia		Grip dash number
	Min	Max	L	P	L	P	L	P	L	P	L	P	
.062	.031	.094	.251	1.38	.296	1.31	-	-	-	-	-	-	
.125	.095	.156	.313	1.50	.358	1.44	.437	1.88	.565	1.81	.672	2.00	02
.188	.157	.219	.376	1.62	.421	1.56	.499	2.00	.627	1.94	.734	2.12	03
.250	.220	.281	.438	1.75	.483	1.69	.562	2.12	.690	2.06	.797	2.25	04
.312	.282	.344	.501	1.88	.546	1.81	.624	2.25	.752	2.19	.859	2.38	05
.375	.345	.406	.563	2.00	.608	1.94	.687	2.38	.815	2.31	.922	2.50	06
.438	.407	.469	.626	2.12	.671	2.06	.749	2.50	.877	2.44	.984	2.62	07
.500	.470	.531	.688	2.25	.733	2.19	.812	2.62	.940	2.56	1.047	2.75	08
.562	.532	.594	.751	2.38	.796	2.31	.874	2.75	1.002	2.69	1.109	2.88	09
.625	.595	.656	.813	1.88	.858	2.44	.937	2.88	1.065	2.81	1.172	3.00	10
.688	.657	.719	.876	1.94	.921	2.56	.999	3.00	1.127	2.94	1.234	3.12	11
.750	.720	.781	.938	2.00	.983	2.69	1.062	3.12	1.190	3.06	1.297	3.25	12
.812	.782	.844	1.001	2.06	1.046	2.81	1.124	3.25	1.252	3.06	1.359	3.25	13
.875	.845	.906	1.063	2.12	1.108	2.94	1.187	3.25	1.315	3.06	1.422	3.25	14
.938	.907	.969	1.126	2.19	1.171	3.06	1.249	3.25	1.377	3.06	1.484	3.25	15
1.000	.970	1.031	1.188	2.25	1.233	3.19	1.312	3.25	1.440	3.06	1.547	3.25	16
1.062	1.032	1.094	1.251	2.31	1.296	3.19	1.374	3.25	1.502	3.06	1.609	3.25	17
1.125	1.095	1.156	1.313	2.38	1.358	3.19	1.437	3.25	1.565	3.06	1.672	3.25	18
1.188	1.157	1.219	1.376	2.44	1.421	3.19	1.499	3.25	1.627	3.06	1.734	3.25	19
1.250	1.220	1.281	1.438	2.50	1.483	3.19	1.562	3.25	1.690	3.06	1.797	3.25	20
1.312	1.282	1.344	1.501	2.56	1.546	3.19	1.624	3.25	1.752	3.06	1.859	3.25	21
1.375	1.345	1.406	1.563	2.62	1.608	3.19	1.687	3.25	1.815	3.06	1.922	3.25	22
1.438	1.407	1.469	-	-	1.671	3.19	1.749	3.25	1.877	3.06	1.984	3.25	23
1.500	1.470	1.531	-	-	1.733	3.19	1.812	3.25	1.940	3.06	2.047	3.25	24
1.562	1.532	1.594	-	-	1.796	3.19	1.874	3.25	2.002	3.12	2.109	3.31	25
1.625	1.595	1.656	-	-	1.858	3.19	1.937	3.25	2.065	3.19	2.172	3.38	26
1.688	1.657	1.719	-	-	1.921	3.19	1.999	3.31	2.127	3.25	2.234	3.44	27
1.750	1.720	1.781	-	-	1.983	3.19	2.062	3.38	2.190	3.31	2.297	3.50	28
1.812	1.782	1.844	-	-	2.046	3.19	2.124	3.44	2.252	3.38	2.359	3.56	29
1.875	1.845	1.906	-	-	2.108	3.19	2.187	3.50	2.315	3.44	2.422	3.62	30
1.938	1.907	1.969	-	-	2.171	3.19	2.249	3.56	2.377	3.50	2.484	3.69	31
2.000	1.970	2.031	-	-	2.233	3.19	2.312	3.62	2.440	3.56	2.547	3.75	32

NOTES: 1. For collar selection, see NAS1080.
2. Add "N" after basic part number for Nickel-Cadmium plate.

THIS DOCUMENT IS BEING PROVIDED BY ABBOTT AEROSPACE
TECHNICAL LIBRARY
ABBOTTAEROSPACE.COM

THIS DOCUMENT PROVIDED BY THE ABBOTT AEROSPACE
TECHNICAL LIBRARY
ABBOTTAEROSPACE.COM
Downloaded from http://www.everyspec.com

SECTION 441

PIN, SWAGE-LOCKING, TRUSS HEAD, STRAIGHT SHANK, SIX LOCKING GROOVES AND MULTIPLE LOCKING GROOVES. ALUMINUM ALLOY, CORROSION RESISTANT STEEL AND CARBON STEEL

APPLICABLE DOCUMENT: MIL-P-23469/5

Material	Protective finish	Shear strength (psi) min	Class
Aluminum alloy 6061	Not specified	26,900	1
Cres #10 AISI 304 AISI 305	Not specified	68,400	2
Carbon steel C1035, C1038, C1041, C10B18, C10B23	Not specified	61,600	3

THIS DOCUMENT PROVIDED BY THE ABBOTT AEROSPACE
Downloaded from http://www.everyspec.com
TECHNICAL LIBRARY
ABBOTTAEROSPACE.COM

TYPE I - SIX LOCKING GROOVE PINS

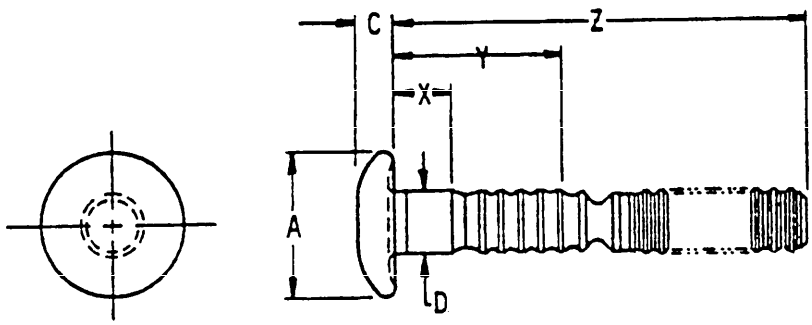

TABLE I. Pin-rivet, groove, configuration.

D Nom dia	A Dia	C	
		Class 1	Class 2 Class 3
.188	.469 .406	.078 .088	.078 .088
.250	.594 .531	.108 .121	.103 .115
.312	.797 .703	.143 .157	.127 .141
.375	.922 .828	.184 .200	.152 .168

THIS DOCUMENT PROVIDED BY THE ABBOTT AEROSPACE TECHNICAL LIBRARY ABBOTTAEROSPACE.COM
Downloaded from http://www.everyspec.com

.125	.375	.125	.570	1.97	-11004	-21004	-31004	.125	.375	.125	.658	2.25	-11204	-21204	-31204
.250	.500	.250	.695	2.09	-11006	-21006	-31006	.250	.500	.250	.783	2.38	-11206	-21206	-31206
.375	.625	.375	.820	2.22	-11008	-21008	-31008	.375	.625	.375	.908	2.50	-11208	-21208	-31208
.500	.750	.500	.945	2.34	-11010	-21010	-31010	.500	.750	.500	1.033	2.63	-11210	-21210	-31210
.625	.875	.625	1.070	2.47	-11012	-21012	-31012	.625	.875	.625	1.158	2.75	-11212	-21212	-31212
.750	1.000	.750	1.195	2.59	-11014	-21014	-31014	.750	1.000	.750	1.283	2.88	-11214	-21214	-31214
.875	1.125	.875	1.320	2.72	-11016	-21016	-31016	.875	1.125	.875	1.408	3.00	-11216	-21216	-31216
1.000	1.250	1.000	1.445	2.84	-11018	-21018	-31018	1.000	1.250	1.000	1.533	3.13	-11218	-21218	-31218

THIS DOCUMENT PROVIDED BY THE ABBOTT AEROSPACE
Downloaded from http://www.everyspec.com
TECHNICAL LIBRARY
ABBOTTAEROSPACE.COM

TYPE II - MULTIPLE LOCKING GROOVE PINS.

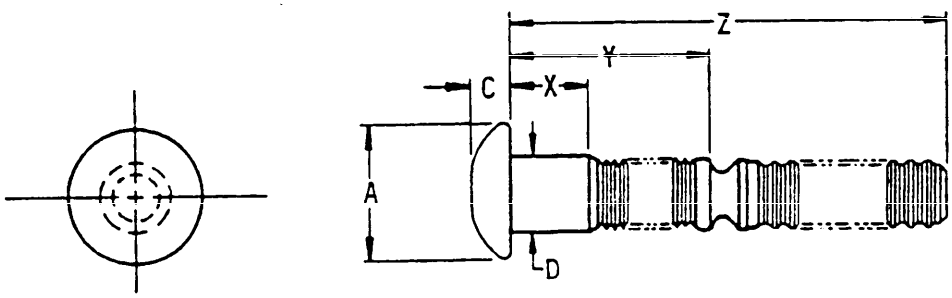

TABLE I. Pin-rivet, groove, configuration.

D Nom dia	A Dia	C
.500	1.138 1.075	.225 .250
.625	1.343 1.280	.288 .313
.750	1.608 1.545	.340 .375
.875	1.915 1.790	.395 .438
1.000	2.180 2.055	.452 .500

TABLE II. M23469/5 Dash numbers.

.500 Diameter					Dash no.			.750 Diameter					Dash no.		
Grip range		X	Y	Z	Al	Cres	Carbon steel	Grip range		X	Y	Z	Al	Cres	Carbon steel
Min	Max				Class 1	Class 2	Class 3	Min	Max				Class 1	Class 2	Class 3
.251	.500	.188	1.213	3.36	-11604	-21604	-31604	.251	.500	.188	1.518	4.34	-12404	-22404	-32404
.501	.750	.438	1.463	3.61	-11608	-21608	-31608	.501	.750	.438	1.768	4.59	-12408	-22408	-32408
.751	1.000	.688	1.713	3.86	-11612	-21612	-31612	.751	1.000	.688	2.018	4.84	-12412	-22412	-32412
1.001	1.250	.938	1.963	4.11	-11616	-21616	-31616	1.001	1.250	.938	2.268	5.09	-12416	-22416	-32416
1.251	1.500	1.188	2.213	4.36	-11620	-21620	-31620	1.251	1.500	1.188	2.518	5.34	-12420	-22420	-32420
1.501	1.750	1.438	2.463	4.61	-11624	-21624	-31624	1.501	1.750	1.438	2.768	5.59	-12424	-22424	-32424
1.751	2.000	1.688	2.213	4.86	-11628	-21628	-31628	1.751	2.000	1.688	3.018	5.84	-12428	-22428	-32428
2.001	2.250	1.938	2.963	5.11	-11632	-21632	-31632	2.001	2.250	1.938	3.268	6.09	-12432	-22432	-32432

.625 Diameter					Dash no.			.875 Diameter					Dash no.		
Grip range		X	Y	Z	Al	Cres		Grip range		X	Y	Z	Al	Cres	Carbon steel
Min	Max				Class 1	Class 2		Min	Max				Class 1	Class 2	Class 3
.251	.500	.188	1.363	3.78	-12004	-22004									
.501	.750	.438	1.613	4.03	-12008	-22008		.501	.750	.438	1.921	4.88	-12803	-22808	-32808
.751	1.000	.688	1.863	4.28	-12012	-22012		.751	1.000	.688	2.171	5.13	-12812	-22812	-32812
1.001	1.250	.938	2.113	4.53	-12016	-22016		1.001	1.250	.938	2.421	5.38	-12816	-22816	-32816
1.251	1.500	1.188	2.363	4.78	-12020	-22020		1.251	1.500	1.188	2.671	5.63	-12820	-22820	-32820
1.501	1.750	1.438	2.613	5.03	-12024	-22024		1.501	1.750	1.438	2.921	5.88	-12824	-22824	-32824
1.751	2.000	1.688	2.863	5.28	-12028	-22028		1.751	2.000	1.688	3.171	6.13	-12828	-22828	-32828
2.001	2.250	1.938	3.113	5.53	-12032	-22032		2.001	2.250	1.938	3.421	6.38	-12832	-22832	-32832

.625 Diameter					Dash no.			1.000 Diameter					Dash no.		
Grip range		X	Y	Z			Carbon steel	Grip range		X	Y	Z	Al	Cres	Carbon steel
Min	Max						Class 3	Min	Max				Class 1	Class 2	Class 3
.251	.500	.188	1.433	3.84			-32004								
.501	.750	.438	1.683	4.09			-32008	.501	.750	.438	2.073	5.57	-13208	-23208	-33208
.751	1.000	.688	1.933	4.34			-32012	.751	1.000	.688	2.323	5.82	-13212	-23212	-33212
1.001	1.250	.938	2.183	4.59			-32016	1.001	1.250	.938	2.573	6.07	-13216	-23216	-33216
1.251	1.500	1.188	2.433	4.84			-32020	1.251	1.500	1.188	2.823	6.32	-13220	-23220	-33220
1.501	1.750	1.438	2.683	5.09			-32024	1.501	1.750	1.438	3.073	6.57	-13224	-23224	-33224
1.751	2.000	1.688	2.933	5.34			-32028	1.751	2.000	1.688	3.323	6.82	-13228	-23228	-33228
2.001	2.250	1.938	3.183	5.59			-32032	2.001	2.250	1.938	3.573	7.07	-13232	-23232	-33232

Downloaded from http://www.everyspec.com
TECHNICAL LIBRARY
ABBOTTAEROSPACE.COM

THIS DOCUMENT PROVIDED BY THE ABBOTT AEROSPACE
Downloaded from http://www.everyspec.com
TECHNICAL LIBRARY
ABBOTTAEROSPACE.COM

THIS DOCUMENT PROVIDED BY THE ABBOTT AEROSPACE
Downloaded from http://www.everyspec.com
TECHNICAL LIBRARY
ABBOTTAEROSPACE.COM

SECTION 442

PIN, SWAGE-LOCKING, WASHER FACE, BRAZIER HEAD, STRAIGHT SHANK, SIX LOCKING GROOVES, CORROSION RESISTANT STEEL

APPLICABLE DOCUMENT: MIL-P-23469/3

TYPE I - SIX LOCKING GROOVE PINS

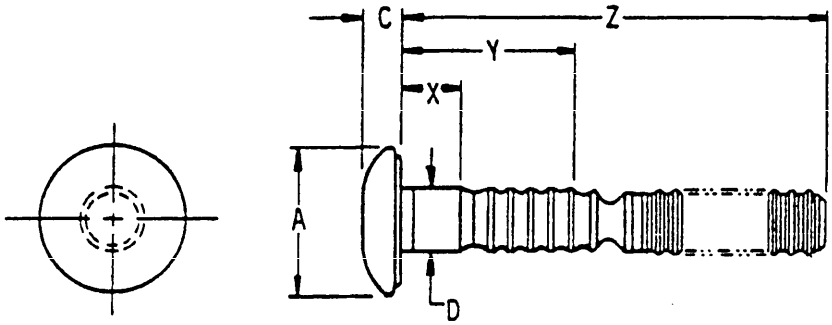

Material	Protective finish	Shear strength (psi) min	Class
Cres #10 AISI 304 AISI 305	Not specified	68,400	2

TABLE I. Pin-rivet, groove, configuration.

D Nom dia	A Dia	C
.312	.656 .594	.181 .201
.375	.787 .713	.223 .248

TABLE II. M23469/3 Dash numbers.

.312 Diameter					Dash no.	.375 Diameter					Dash no.
Grip range		X	Y	Z	Cres	Grip range		X	Y	Z	Cres
Min	Max				Class 2	Min	Max				Class 2
.125	.375	.125	.570	1.97	-21004	.125	.375	.125	.658	2.25	-21204
.250	.500	.250	.695	2.09	-21006	.250	.500	.250	.783	2.38	-21206
.375	.625	.375	.820	2.22	-21008	.375	.625	.375	.908	2.50	-21208
.500	.750	.500	.945	2.34	-21010	.500	.750	.500	1.033	2.63	-21210
.625	.875	.625	1.070	2.47	-21012	.625	.875	.625	1.158	2.75	-21212
.750	1.000	.750	1.195	2.59	-21014	.750	1.000	.750	1.283	2.88	-21214
.875	1.125	.875	1.320	2.72	-21016	.875	1.125	.875	1.408	3.00	-21216
1.000	1.250	1.000	1.445	2.84	-21018	1.000	1.250	1.000	1.533	3.13	-21218

THIS DOCUMENT PROVIDED BY THE ABBOTT AEROSPACE
TECHNICAL LIBRARY
ABBOTTAEROSPACE.COM
Downloaded from http://www.everyspec.com

THIS DOCUMENT PROVIDED BY THE ABBOTT AEROSPACE
Downloaded from http://www.everyspec.com
TECHNICAL LIBRARY
ABBOTTAEROSPACE.COM

SECTION 501

PIN, CRIMP, 100° CROWN SHEAR/TENSION HEAD

APPLICABLE DOCUMENT: NAS4466

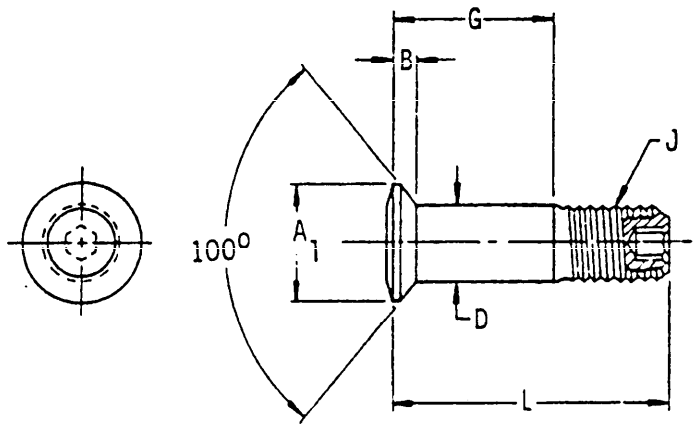

Material	Protective finish	Shear strength (psi) min	Tensile strength (psi) min
Alloy steel AISI 4340 or 8740	Cadmium plate or nickel-cadmium plating	108,000	93,700

TABLE I. Pin-rivet, threaded, configuration part numbers.

D Nom size	A_1 Min dia	B Ref	J Thread	Basic part number
.164	.229	.036	.1640-32 UNJC-3A	NAS4466( )05
.190	.269	.045	.1900-32 UNJF-3A	NAS4466( )06
.250	.361	.061	.2500-28 UNJF-3A	NAS4466( )08
.312	.440	.073	.3125-24 UNJF-3A	NAS4466( )10
.375	.537	.086	.3750-24 UNJF-3A	NAS4466( )12

THIS DOCUMENT PROVIDED BY THE ABBOTT AEROSPACE
Downloaded from http://www.everyspec.com
TECHNICAL LIBRARY
ABBOTTAEROSPACE.COM

TABLE II. NAS4466 Dash numbers.

G	Grip range		L					Grip dash number
	Min	Max	.164 Dia	.190 Dia	.250 Dia	.312 Dia	.375 Dia	
.125	.063	.125	.382	.410	.473	-	-	-02
.188	.126	.188	.445	.473	.536	.599	.659	-03
.250	.189	.250	.507	.535	.598	.661	.721	-04
.312	.251	.312	.570	.598	.661	.724	.784	-05
.375	.313	.375	.632	.660	.723	.786	.846	-06
.438	.376	.438	.695	.723	.786	.849	.909	-07
.500	.439	.500	.757	.785	.848	.911	.971	-08
.562	.501	.562	.820	.848	.911	.974	1.034	-09
.625	.563	.625	.882	.910	.973	1.036	1.096	-10
.688	.626	.688	-	.973	1.036	1.099	1.159	-11
.750	.689	.750	-	1.035	1.098	1.161	1.221	-12
.812	.751	.812	-	-	1.161	1.224	1.284	-13
.875	.813	.875	-	-	1.223	1.286	1.346	-14
.938	.876	.938	-	-	1.286	1.349	1.409	-15
1.000	.939	1.000	-	-	1.348	1.411	1.471	-16
1.062	1.001	1.062	-	-	-	1.474	1.534	-17
1.125	1.063	1.125	-	-	-	1.536	1.596	-18
1.188	1.126	1.188	-	-	-	1.599	1.659	-19
1.250	1.189	1.250	-	-	-	1.661	1.721	-20
1.312	1.251	1.312	-	-	-	-	1.784	-21
1.375	1.313	1.375	-	-	-	-	1.846	-22
1.438	1.376	1.438	-	-	-	-	1.909	-23
1.500	1.439	1.500	-	-	-	-	1.971	-24

NOTE: For crimp nut selection, see NAS4455.

THIS DOCUMENT PROVIDED BY THE ABBOTT AEROSPACE
Downloaded from http://www.everyspec.com
TECHNICAL LIBRARY
ABBOTTAEROSPACE.COM

SECTION 502

PIN, CRIMP, 100° FLUSH SHEAR HEAD

APPLICABLE DOCUMENT: NAS4452

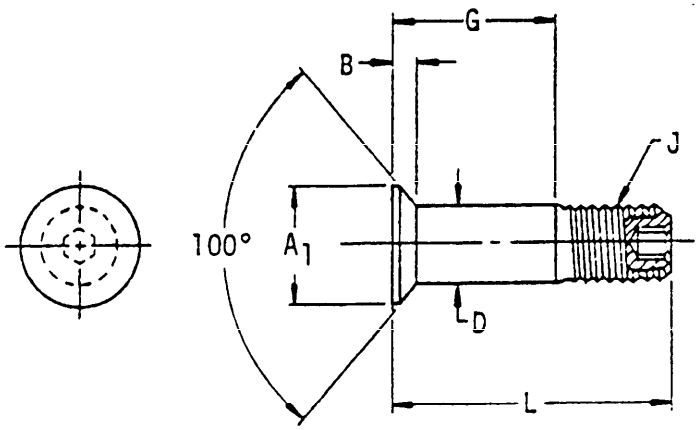

Material		Protective finish	Shear strength (psi) min
Alloy steel	AISI 4340 or 8740	Cadmium plate	108,000
	H-11	Nickel-cadmium plating	156,000
Titanium alloy 6AL-4V		None	95,000

TABLE I. Pin-rivet, threaded, configuration part numbers.

D Nom size	A_1 Min dia	B Max	J Thread	Basic part number
.164	.220	.040	.1640-32 UNJC-3A	NAS4452( )05
.190	.263	.049	.1900-32 UNJF-3A	NAS4452( )06
.250	.346	.063	.2500-28 UNJF-3A	NAS4452( )08
.312	.456	.077	.3125-24 UNJF-3A	NAS4452( )10
.375	.517	.091	.3750-24 UNJF-3A	NAS4452( )12

THIS DOCUMENT PROVIDED BY THE ABBOTT AEROSPACE
Downloaded from http://www.everyspec.com
TECHNICAL LIBRARY
ABBOTTAEROSPACE.COM

TABLE II. NAS4452 Dash numbers.

G	Grip range		L					Grip dash number
	Min	Max	.164 Dia	.190 Dia	.250 Dia	.312 Dia	.375 Dia	
.125	.063	.125	.382	.410	.473	-	-	-02
.188	.126	.188	.445	.473	.536	.599	.659	-03
.250	.189	.250	.507	.535	.598	.661	.721	-04
.312	.251	.312	.570	.598	.661	.724	.784	-05
.375	.313	.375	.632	.660	.723	.786	.846	-06
.438	.376	.438	.695	.723	.786	.849	.909	-07
.500	.439	.500	.757	.785	.848	.911	.971	-08
.562	.501	.562	.820	.848	.911	.974	1.034	-09
.625	.563	.625	.882	.910	.973	1.036	1.096	-10
.688	.626	.688	-	.973	1.036	1.099	1.159	-11
.750	.689	.750	-	1.035	1.098	1.161	1.221	-12
.812	.751	.812	-	-	1.161	1.224	1.284	-13
.875	.813	.875	-	-	1.223	1.286	1.346	-14
.938	.876	.938	-	-	1.286	1.349	1.409	-15
1.000	.939	1.000	-	-	1.348	1.411	1.471	-16
1.062	1.001	1.062	-	-	-	1.474	1.534	-17
1.125	1.063	1.125	-	-	-	1.536	1.596	-18
1.188	1.126	1.188	-	-	-	1.599	1.659	-19
1.250	1.189	1.250	-	-	-	1.661	1.721	-20
1.312	1.251	1.312	-	-	-	-	1.784	-21
1.375	1.313	1.375	-	-	-	-	1.846	-22
1.438	1.376	1.438	-	-	-	-	1.909	-23
1.500	1.439	1.500	-	-	-	-	1.971	-24

NOTE: For crimp nut selection, see NAS4445.

THIS DOCUMENT PROVIDED BY THE ABBOTT AEROSPACE
Downloaded from http://www.everyspec.com
TECHNICAL LIBRARY
ABBOTTAEROSPACE.COM

SECTION 503

PIN, CRIMP, PROTRUDING SHEAR HEAD

APPLICABLE DOCUMENT: NAS4450

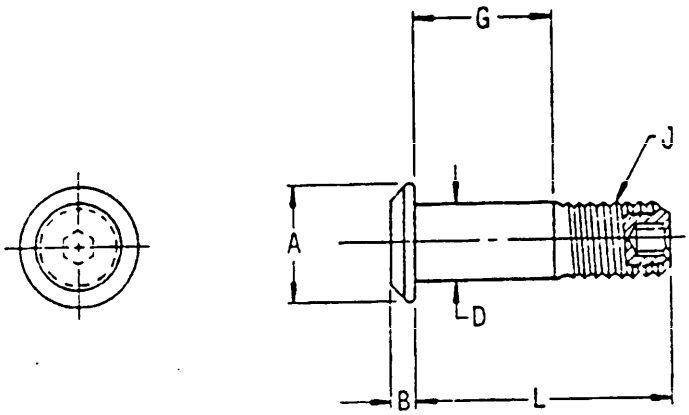

Material		Protective finish	Shear strength (psi) min
Alloy steel	AISI 4340 or 8740	Cadmium plate or nickel-cadmium plating	108,000
	H-11	Nickel-cadmium plating	156,000
Titanium alloy 6AL-4V		None	95,000

TABLE I. Pin-rivet, threaded, configuration part numbers.

D Nom dia	A Dia	B	J Thread	Basic part number
.164	.257 .245	.047 .039	.1640-32 UNJC-3A	NAS4450( )05
.190	.312 .298	.050 .042	.1900-32 UNJF-3A	NAS4450( )06
.250	.413 .398	.069 .061	.2500-28 UNJF-3A	NAS4450( )08
.312	.503 .483	.078 .070	.3125-24 UNJF-3A	NAS4450( )10
.375	.583 .563	.088 .080	.3750-24 UNJF-3A	NAS4450( )12

THIS DOCUMENT PROVIDED BY THE ABBOTT AEROSPACE
TECHNICAL LIBRARY
ABBOTTAEROSPACE.COM
Downloaded from http://www.everyspec.com

TABLE II. NAS4450 Dash numbers.

G	Grip range		L					Grip dash number
	Min	Max	.164 Dia	.190 Dia	.250 Dia	.312 Dia	.375 Dia	
.062	-	.062	.320	.348	.411	-	-	01
.125	.063	.125	.382	.410	.473	.536	.596	02
.188	.126	.188	.445	.473	.536	.599	.659	03
.250	.189	.250	.507	.535	.598	.661	.721	04
.312	.251	.312	.570	.598	.661	.724	.784	05
.375	.313	.375	.632	.660	.723	.786	.846	06
.438	.376	.438	.695	.723	.786	.849	.909	07
.500	.439	.500	.757	.785	.848	.911	.971	08
.562	.501	.562	.820	.848	.911	.974	1.034	09
.625	.563	.625	.882	.910	.973	1.036	1.096	10
.688	.626	.688	-	.973	1.036	1.099	1.159	11
.750	.689	.750	-	1.035	1.098	1.161	1.221	12
.812	.751	.812	-	-	1.161	1.224	1.284	13
.875	.813	.875	-	-	1.223	1.286	1.346	14
.938	.876	.938	-	-	1.286	1.349	1.409	15
1.000	.939	1.000	-	-	1.348	1.411	1.471	16
1.062	1.001	1.062	-	-	-	1.474	1.534	17
1.125	1.063	1.125	-	-	-	1.536	1.596	18
1.188	1.126	1.188	-	-	-	1.599	1.659	19
1.250	1.189	1.250	-	-	-	1.661	1.721	20
1.312	1.251	1.312	-	-	-	-	1.784	21
1.375	1.313	1.375	-	-	-	-	1.846	22
1.438	1.376	1.438	-	-	-	-	1.909	23
1.500	1.439	1.500	-	-	-	-	1.971	24

NOTE: For crimp nut selection, see NAS4445.

THIS DOCUMENT PROVIDED BY THE ABBOTT AEROSPACE
TECHNICAL LIBRARY
ABBOTTAEROSPACE.COM
Downloaded from http://www.everyspec.com

SECTION 504

PIN, CRIMP, PROTRUDING TENSION HEAD

APPLICABLE DOCUMENT: NAS4458

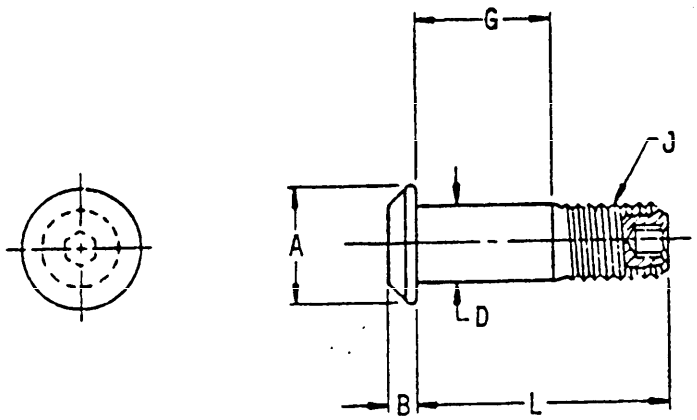

Material	Protective finish	Tension strength (psi) min
Alloy steel AISI 4340 or 8740	Cadmium plate or nickel-cadmium plating	93,700

TABLE I. Pin-rivet, threaded, configuration part numbers.

D Nom dia	A Dia	B	J Thread	Basic part number
.164	.257 .245	.077 .070	.1640-32 UNJC-3A	NAS4458( )05
.190	.312 .298	.086 .079	.1900-32 UNJF-3A	NAS4458( )06
.250	.413 .398	.111 .104	.2500-28 UNJF-3A	NAS4458( )08
.312	.503 .483	.137 .130	.3125-24 UNJF-3A	NAS4458( )10
.375	.583 .563	.164 .157	.3750-24 UNJF-3A	NAS4458( )12

THIS DOCUMENT PROVIDED BY THE ABBOTT AEROSPACE
Downloaded from http://www.everyspec.com
TECHNICAL LIBRARY
ABBOTTAEROSPACE.COM

TABLE II. NAS4458 Dash numbers.

G	Grip range		L					Grip dash number
	Min	Max	.164 Dia	.190 Dia	.250 Dia	.312 Dia	.375 Dia	
.062		.062	.320	.348	.411	-	-	01
.125	.063	.125	.382	.410	.473	.536	.596	02
.188	.126	.188	.445	.473	.536	.599	.659	03
.250	.189	.250	.507	.535	.598	.661	.721	04
.312	.251	.312	.570	.598	.661	.724	.784	05
.375	.313	.375	.632	.660	.723	.786	.846	06
.438	.376	.438	.695	.723	.786	.849	.909	07
.500	.439	.500	.757	.785	.848	.911	.971	08
.562	.501	.562	.820	.848	.911	.974	1.034	09
.625	.563	.625	.882	.910	.973	1.036	1.096	10
.688	.626	.688	-	.973	1.036	1.099	1.159	11
.750	.689	.750	-	1.035	1.098	1.161	1.221	12
.812	.751	.812	-	-	1.161	1.224	1.284	13
.875	.813	.875	-	-	1.223	1.286	1.346	14
.938	.876	.938	-	-	1.286	1.349	1.409	15
1.000	.939	1.000	-	-	1.348	1.411	1.471	16
1.062	1.001	1.062	-	-	-	1.474	1.534	17
1.125	1.063	1.125	-	-	-	1.536	1.596	18
1.188	1.126	1.188	-	-	-	1.599	1.659	19
1.250	1.189	1.250	-	-	-	1.661	1.721	20
1.312	1.215	1.312	-	-	-	-	1.784	21
1.375	1.313	1.375	-	-	-	-	1.846	22
1.438	1.376	1.438	-	-	-	-	1.909	23
1.500	1.439	1.500	-	-	-	-	1.971	24

NOTE: For crimp nut selection, see NAS4445.

THIS DOCUMENT PROVIDED BY THE ABBOTT AEROSPACE
Downloaded from http://www.everyspec.com
TECHNICAL LIBRARY
· ABBOTTAEROSPACE.COM

SECTION 505

PIN-RIVET, THREADED, BUTTON HEAD, STRAIGHT SHANK

APPLICABLE DOCUMENT: MIL-P-23470/1./5./10./14

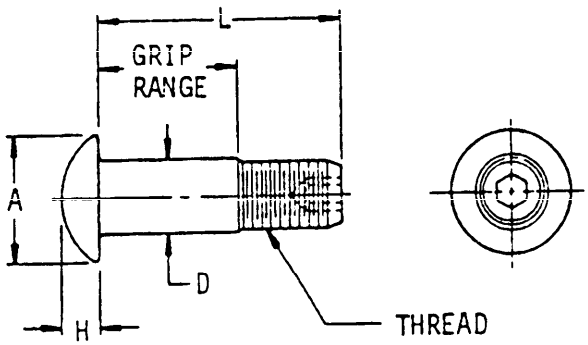

Footnotes	Part Numbers	Material	Protective finish	Shear strength (psi) min
1/	M23470/14 + dash nos.	Aluminum alloy 6061-T6	Anodic coat	24,950
2/	M23470/5 + dash nos.	Carbon steel ASTM A546	Zinc plate	68,400
3/	M23470/10 + dash nos.	Cres 304 or 304L or 305 or 316 or 316L	Passivate	68,400
4/	M23470/1	Cres, class 304 or 304L or 305 or 316 or 316L	Passivate	68,400

1/ Threads shall be class 3A (UNF-3A) of Handbook H-28, per MIL-S-8879.
2/, 3/, 4/ Threads shall be class 2A (UNF-2A) of Handbook H-28, per MIL-S-8879.

THIS DOCUMENT PROVIDED BY THE ABBOTT AEROSPACE
Downloaded from http://www.everyspec.com
TECHNICAL LIBRARY
ABBOTTAEROSPACE.COM

TABLE I. Part numbers (M23470/14,/5,/10).

D	Nom....	.188		.250		.312		.375	
A	Min....	.343		.469		.531		.656	
	Max....	.374		.500		.563		.687	
H	Min....	.094		.125		.156		.188	
	Max....	.114		.145		.176		.208	
Grip range		L	1/, 2/, or 3/	L	1/, 2/, or 3/	L	1/, 2/, or 3/	L	1/, 2/, or 3/
Min	Max								
.062	.188	.531	- 1	.594	-33	.656	-65	.719	-97
.188	.312	.656	- 2	.719	-34	.781	-66	.844	-98
.312	.438	.781	- 3	.844	-35	.906	-67	.969	-99
.438	.562	.906	- 4	.969	-36	1.031	-68	1.094	-100
.562	.688	1.031	- 5	1.094	-37	1.156	-69	1.219	-101
.688	.812	1.156	- 6	1.219	-38	1.281	-70	1.344	-102
.812	.938	1.281	- 7	1.344	-39	1.406	-71	1.469	-103
.938	1.062	1.406	- 8	1.469	-40	1.531	-72	1.594	-104
1.062	1.188	1.531	- 9	1.594	-41	1.656	-73	1.719	-105
1.188	1.312	1.656	-10	1.719	-42	1.781	-74	1.844	-106
1.312	1.438	1.781	-11	1.844	-43	1.906	-75	1.969	-107
1.438	1.562	1.906	-12	1.969	-44	2.031	-76	2.094	-108
1.562	1.688	2.031	-13	2.094	-45	2.156	-77	2.219	-109
1.688	1.812	2.156	-14	2.219	-46	2.281	-78	2.344	-110
1.812	1.938	2.281	-15	2.344	-47	2.406	-79	2.469	-111
1.938	2.062	2.406	-16	2.469	-48	2.531	-80	2.594	-112
2.062	2.188	2.531	-17	2.594	-49	2.656	-81	2.719	-113
2.188	2.312	2.656	-18	2.719	-50	2.781	-82	2.844	-114
2.312	2.438	2.781	-19	2.844	-51	2.906	-83	2.969	-115
2.438	2.562	2.906	-20	2.969	-52	3.031	-84	3.094	-116
2.562	2.688	3.031	-21	3.094	-53	3.156	-85	3.219	-117
2.688	2.812	3.156	-22	3.219	-54	3.281	-86	3.344	-118
2.812	2.938	3.281	-23	3.344	-55	3.406	-87	3.469	-119
2.938	3.062	3.406	-24	3.469	-56	3.531	-88	3.594	-120
3.062	3.188	3.531	-25	3.594	-57	3.656	-89	3.719	-121
3.188	3.312	3.656	-26	3.719	-58	3.781	-90	3.844	-122
3.312	3.438	3.781	-27	3.844	-59	3.906	-91	3.969	-123
3.438	3.562	3.906	-28	3.969	-60	4.031	-92	4.094	-124
3.562	3.688	4.031	-29	4.094	-61	4.156	-93	4.219	-125
3.688	3.812	4.156	-30	4.219	-62	4.281	-94	4.344	-126
3.812	3.938	4.281	-31	4.344	-63	4.406	-95	4.469	-127
3.938	4.062	4.406	-32	4.469	-64	4.531	-96	4.594	-128

1/, 2/, 3/ (see page 505.1)

THIS DOCUMENT PROVIDED BY THE ABBOTT AEROSPACE
Downloaded from http://www.everyspec.com
TECHNICAL LIBRARY
ABBOTTAEROSPACE.COM

TABLE I. Part Numbers (M23470/14,/5,/10). - Continued

D	Nom	.438		.500		.625		.750	
A	Min	.719		.828		1.063		1.125	
	Max	.750		.859		1.094		1.156	
H	Min	.219		.250		.312		.375	
	Max	.239		.270		.332		.395	
Grip range		L	1/, 2/,	L	1/, 2/,	L	1/, 2/,	L	1/, 2/,
Min	Max		or 3/		or 3/		or 3/		or 3/
.062	.188	.781	-129	.844	-161	.906	-193	1.031	-225
.188	.312	.906	-130	.969	-162	1.031	-194	1.156	-226
.312	.438	1.031	-131	1.094	-163	1.156	-195	1.281	-227
.438	.562	1.156	-132	1.219	-164	1.281	-196	1.406	-228
.562	.688	1.281	-133	1.344	-165	1.406	-197	1.531	-229
.688	.812	1.406	-134	1.469	-166	1.531	-198	1.656	-230
.812	.938	1.531	-135	1.594	-167	1.656	-199	1.781	-231
.938	1.062	1.656	-136	1.719	-168	1.781	-200	1.906	-232
1.062	1.188	1.781	-137	1.844	-169	1.906	-201	2.031	-233
1.188	1.312	1.906	-138	1.969	-170	2.031	-202	2.156	-234
1.312	1.438	2.031	-139	2.094	-171	2.156	-203	2.281	-235
1.438	1.562	2.156	-140	2.219	-172	2.281	-204	2.406	-236
1.562	1.688	2.281	-141	2.344	-173	2.406	-205	2.531	-237
1.688	1.812	2.406	-142	2.469	-174	2.531	-206	2.656	-238
1.812	1.938	2.531	-143	2.594	-175	2.656	-207	2.781	-239
1.938	2.062	2.656	-144	2.719	-176	2.781	-208	2.906	-240
2.062	2.188	2.781	-145	2.844	-177	2.906	-209	3.031	-241
2.188	2.312	2.906	-146	2.969	-178	3.031	-210	3.156	-242
2.312	2.438	3.031	-147	3.094	-179	3.156	-211	3.281	-243
2.438	2.562	3.156	-148	3.219	-180	3.281	-212	3.406	-244
2.562	2.688	3.281	-149	3.344	-181	3.406	-213	3.531	-245
2.688	2.812	3.406	-150	3.469	-182	3.531	-214	3.656	-246
2.812	2.938	3.531	-151	3.594	-183	3.656	-215	3.781	-247
2.938	3.062	3.656	-152	3.719	-184	3.781	-216	3.906	-248
3.062	3.188	3.781	-153	3.844	-185	3.906	-217	4.031	-249
3.188	3.312	3.906	-154	3.969	-186	4.031	-218	4.156	-250
3.312	3.438	4.031	-155	4.094	-187	4.156	-219	4.281	-251
3.438	3.562	4.156	-156	4.219	-188	4.281	-220	4.406	-252
3.562	3.688	4.281	-157	4.344	-189	4.406	-221	4.531	-253
3.688	3.812	4.406	-158	4.469	-190	4.531	-222	4.656	-254
3.812	3.938	4.531	-159	4.594	-191	4.656	-223	4.781	-255
3.938	4.062	4.656	-160	4.719	-192	4.781	-224	4.906	-256

1/, 2/, 3/ (see page 505.1)

THIS DOCUMENT PROVIDED BY THE ABBOTT AEROSPACE
Downloaded from http://www.everyspec.com
TECHNICAL LIBRARY
ABBOTTAEROSPACE.COM

TABLE II. Part numbers (M23470/1).

D Nom ...		.250		.312		.375		.438		.500	
A Min ...		.563		.688		.813		.938		1.063	
Max ...		.594		.719		.844		.969		1.094	
H Min ...		.125		.156		.188		.219		.250	
Max ...		.145		.176		.208		.239		.270	
Grip range		L	4/	L	4/	L	4/	L	4/	L	4/
Min	Max										
.062	.188	.594	-33	.656	-65	.719	-97	.781	-129	.844	-161
.188	.312	.719	-34	.781	-66	.844	-98	.906	-130	.969	-162
.312	.438	.844	-35	.906	-67	.969	-99	1.031	-131	1.094	-163
.438	.562	.969	-36	1.031	-68	1.094	-100	1.156	-132	1.219	-164
.562	.688	1.094	-37	1.156	-69	1.219	-101	1.281	-133	1.344	-165
.688	.812	1.219	-38	1.281	-70	1.344	-102	1.406	-134	1.469	-166
.812	.938	1.344	-39	1.406	-71	1.469	-103	1.531	-135	1.594	-167
.938	1.062	1.469	-40	1.531	-72	1.594	-104	1.656	-136	1.719	-168
1.062	1.188	1.594	-41	1.656	-73	1.719	-105	1.781	-137	1.844	-169
1.188	1.312	1.719	-42	1.781	-74	1.844	-106	1.906	-138	1.969	-170
1.312	1.438	1.844	-43	1.906	-75	1.969	-107	2.031	-139	2.094	-171
1.438	1.562	1.969	-44	2.031	-76	2.094	-108	2.156	-140	2.219	-172
1.562	1.688	2.094	-45	2.156	-77	2.219	-109	2.281	-141	2.344	-173
1.688	1.812	2.219	-46	2.281	-78	2.344	-110	2.406	-142	2.469	-174
1.812	1.938	2.344	-47	2.406	-79	2.469	-111	2.531	-143	2.594	-175
1.938	2.062	2.469	-48	2.531	-80	2.594	-112	2.656	-144	2.719	-176
2.062	2.188	2.594	-49	2.656	-81	2.719	-113	2.781	-145	2.844	-177
2.188	2.312	2.719	-50	2.781	-82	2.844	-114	2.906	-146	2.969	-178
2.312	2.438	2.844	-51	2.906	-83	2.969	-115	3.031	-147	3.094	-179
2.438	2.562	2.969	-52	3.031	-84	3.094	-116	3.156	-148	3.219	-180
2.562	2.688	3.094	-53	3.156	-85	3.219	-117	3.281	-149	3.344	-181
2.688	2.812	3.219	-54	3.281	-86	3.344	-118	3.406	-150	3.469	-182
2.812	2.938	3.344	-55	3.406	-87	3.469	-119	3.531	-151	3.594	-183
2.938	3.062	3.469	-56	3.531	-88	3.594	-120	3.656	-152	3.719	-184
3.062	3.188	3.594	-57	3.656	-89	3.719	-121	3.781	-153	3.844	-185
3.188	3.312	3.719	-58	3.781	-90	3.844	-122	3.906	-154	3.969	-186
3.312	3.438	3.844	-59	3.906	-91	3.969	-123	4.031	-155	4.094	-187
3.438	3.562	3.969	-60	4.031	-92	4.094	-124	4.156	-156	4.219	-188
3.562	3.688	4.094	-61	4.156	-93	4.219	-125	4.281	-157	4.344	-189
3.688	3.812	4.219	-62	4.281	-94	4.344	-126	4.406	-158	4.469	-190
3.812	3.938	4.344	-63	4.406	-95	4.469	-127	4.531	-159	4.594	-191
3.938	4.062	4.469	-64	4.531	-96	4.594	-128	4.656	-160	4.719	-192

4/ (see page 505.1)

THIS DOCUMENT PROVIDED BY THE ABBOTT AEROSPACE
Downloaded from http://www.everyspec.com
TECHNICAL LIBRARY
ABBOTTAEROSPACE.COM

SECTION 506

PIN-RIVET, THREADED, BUTTON HEAD, TAPERED SHANK

APPLICABLE DOCUMENT: MIL-P-23470/2./6./15

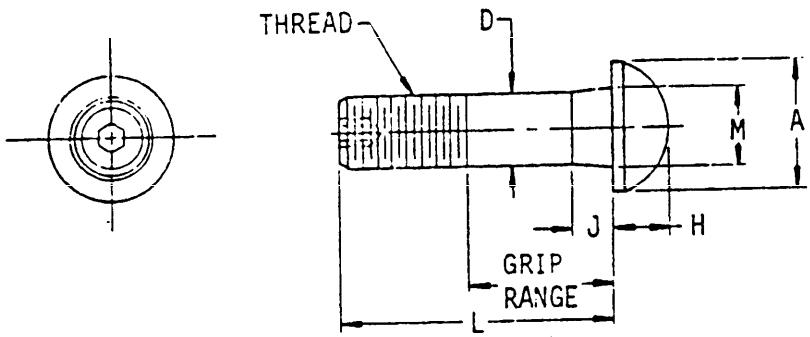

Footnotes	Part Numbers	Material	Protective finish	Shear strength (psi) min
1/	M23470/15 + dash no.	Aluminum alloy 6061-T6	Anodic coating	24,950
2/	M23470/6 + dash no.	Carbon steel ASTM A546	Zinc plate	70,500
3/	M23470/2 + dash no.	Cres 304 or 304L or 305 or 316 or 316L	Passivate	68,400

1/ Threads shall be class 3A (UNF-3A) of Handbook H-28, per MIL-S-8879.
2/, 3/ Threads shall be class 2A (UNC-2A) of Handbook H-28, per MIL-S-7749.

THIS DOCUMENT PROVIDED BY THE ABBOTT AEROSPACE
Downloaded from http://www.everyspec.com
TECHNICAL LIBRARY
ABBOTTAEROSPACE.COM

TABLE I. Part numbers.

D Nom		.188		.250		.312		.375		.500	
A	Min	.325		.430		.545		.660		.885	
	Max	.355		.460		.575		.690		.915	
H	Min	.075		.100		.136		.164		.222	
	Max	.095		.120		.155		.184		.242	
M	Min	.208		.268		.332		.395		.520	
	Max	.218		.278		.342		.405		.530	
J	Min	.060		.090		.125		.156		.219	
	Max	.110		.145		.187		.219		.281	
Grip range		L	1/, 2/ or 3/	L	1/, 2/ or 3/	L	1/, 2/ or 3/	L	1/, 2/ or 3/	L	1/, 2/ or 3/
Min	Max										
.125	.250	.594	-1	.688	-32	-	-	-	-	-	-
.250	.375	.719	-2	.812	-33	.875	-64	-	-	-	-
.375	.500	.844	-3	.938	-34	1.000	-65	1.094	-96	-	-
.500	.625	.969	-4	1.062	-35	1.125	-66	1.219	-97	1.375	-128
.625	.750	1.094	-5	1.188	-36	1.250	-67	1.344	-98	1.500	-129
.750	.875	1.219	-6	1.312	-37	1.375	-68	1.469	-99	1.625	-130
.875	1.000	1.344	-7	1.438	-38	1.500	-69	1.594	-100	1.750	-131
1.000	1.125	1.469	-8	1.562	-39	1.625	-70	1.719	-101	1.875	-132
1.125	1.250	1.594	-9	1.688	-40	1.750	-71	1.844	-102	2.000	-133
1.250	1.375	1.719	-10	1.812	-41	1.875	-72	1.969	-103	2.125	-134
1.375	1.500	1.844	-11	1.938	-42	2.000	-73	2.094	-104	2.250	-135
1.500	1.625	1.969	-12	2.062	-43	2.125	-74	2.219	-105	2.375	-136
1.625	1.750	2.094	-13	2.188	-44	2.250	-75	2.344	-106	2.500	-137
1.750	1.875	2.219	-14	2.312	-45	2.375	-76	2.469	-107	2.625	-138
1.875	2.000	2.344	-15	2.438	-46	2.500	-77	2.594	-108	2.750	-139
2.000	2.125	2.469	-16	2.562	-47	2.625	-78	2.719	-109	2.875	-140
2.125	2.250	2.594	-17	2.688	-48	2.750	-79	2.844	-110	3.000	-141
2.250	2.375	2.719	-18	2.812	-49	2.875	-80	2.969	-111	3.125	-142
2.375	2.500	2.844	-19	2.938	-50	3.000	-81	3.094	-112	3.250	-143
2.500	2.625	2.969	-20	3.062	-51	3.125	-82	3.219	-113	3.375	-144
2.625	2.750	3.094	-21	3.188	-52	3.250	-83	3.344	-114	3.500	-145
2.750	2.875	3.219	-22	3.312	-53	3.375	-84	3.469	-115	3.625	-146
2.875	3.000	3.344	-23	3.438	-54	3.500	-85	3.594	-116	3.750	-147
3.000	3.125	3.469	-24	3.562	-55	3.625	-86	3.719	-117	3.875	-148
3.125	3.250	3.594	-25	3.688	-56	3.750	-87	3.844	-118	4.000	-149
3.250	3.375	3.719	-26	3.812	-57	3.875	-88	3.969	-119	4.125	-150
3.375	3.500	3.844	-27	3.938	-58	4.000	-89	4.094	-120	4.250	-151
3.500	3.625	3.969	-28	4.062	-59	4.125	-90	4.219	-121	4.375	-152
3.625	3.750	4.094	-29	4.188	-60	4.250	-91	4.344	-122	4.500	-153
3.750	3.875	4.219	-30	4.312	-61	4.375	-92	4.469	-123	4.625	-154
3.875	4.000	4.344	-31	4.438	-62	4.500	-93	4.594	-124	4.750	-155

1/, 2/, 3/ (See page 506.1)

THIS DOCUMENT PROVIDED BY THE ABBOTT AEROSPACE
Downloaded from http://www.everyspec.com
TECHNICAL LIBRARY
ABBOTTAEROSPACE.COM

TABLE I. Part numbers. - Continued

D Nom.....	.625		.750		.875		1.000	
A Min.....	1.110		1.335		1.560		1.785	
Max.....	1.140		1.365		1.590		1.815	
H Min.....	.280		.340		.396		.455	
Max.....	.300		.360		.416		.475	
M Min.....	.645		.770		.895		1.020	
Max.....	.655		.780		.905		1.030	
J Min.....	.281		.344		.406		.469	
Max.....	.344		.406		.469		.531	
Grip range	L	1/, 2/ or 3/	L	1/, 2/ or 3/	L	1/, 2/ or 3/	L	1/, 2/ or 3/
Min Max								
.500 .625	1.531	-159	-	-	-	-	-	-
.625 .750	1.656	-160	1.812	-191	-	-	-	-
.750 .875	1.781	-161	1.938	-192	2.094	-223	-	-
.875 1.000	1.906	-162	2.062	-193	2.219	-224	2.375	-255
1.000 1.125	2.031	-163	2.188	-194	2.344	-225	2.500	-256
1.125 1.250	2.156	-164	2.312	-195	2.469	-226	2.625	-257
1.250 1.375	2.281	-165	2.438	-196	2.594	-227	2.750	-258
1.375 1.500	2.406	-166	2.562	-197	2.719	-228	2.875	-259
1.500 1.625	2.531	-167	2.688	-198	2.844	-229	3.000	-260
1.625 1.750	2.656	-168	2.812	-199	2.969	-230	3.125	-261
1.750 1.875	2.781	-169	2.938	-200	3.094	-231	3.250	-262
1.875 2.000	2.906	-170	3.062	-201	3.219	-232	3.375	-263
2.000 2.125	3.031	-171	3.188	-202	3.344	-233	3.500	-264
2.125 2.250	3.156	-172	3.312	-203	3.469	-234	3.625	-265
2.250 2.375	3.281	-173	3.438	-204	3.594	-235	3.750	-266
2.375 2.500	3.406	-174	3.562	-205	3.719	-236	3.875	-267
2.500 2.625	3.531	-175	3.688	-206	3.844	-237	4.000	-268
2.625 2.750	3.656	-176	3.812	-207	3.969	-238	4.125	-269
2.750 2.875	3.781	-177	3.938	-208	4.094	-239	4.250	-270
2.875 3.000	3.906	-178	4.062	-209	4.219	-240	4.375	-271
3.000 3.125	4.031	-179	4.188	-210	4.344	-241	4.500	-272
3.125 3.250	4.156	-180	4.312	-211	4.469	-242	4.625	-273
3.250 3.375	4.281	-181	4.438	-212	4.594	-243	4.750	-274
3.375 3.500	4.406	-182	4.562	-213	4.719	-244	4.875	-275
3.500 3.625	4.531	-183	4.688	-214	4.844	-245	5.000	-276
3.625 3.750	4.656	-184	4.812	-215	4.969	-246	5.125	-277
3.750 3.875	4.781	-185	4.938	-216	5.094	-247	5.250	-278
3.875 4.000	4.906	-186	5.062	-217	5.219	-248	5.375	-279

1/, 2/, 3/ (See page 506.1)

THIS DOCUMENT PROVIDED BY THE ABBOTT AEROSPACE
TECHNICAL LIBRARY
ABBOTTAEROSPACE.COM
Downloaded from http://www.everyspec.com

THIS DOCUMENT PROVIDED BY THE ABBOTT AEROSPACE
Downloaded from http://www.everyspec.com
TECHNICAL LIBRARY
ABBOTTAEROSPACE.COM

SECTION 507

PIN-RIVET, THREADED, 60° COUNTERSUNK OVAL HEAD, STRAIGHT SHANK

APPLICABLE DOCUMENT: MIL-P-23470/7./11./16

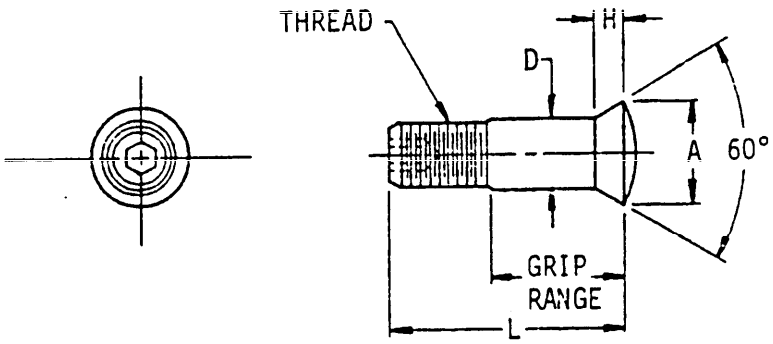

Footnotes	Part numbers	Material	Protective finish	Shear strength (psi) min
1/	M23470/16 + dash no.	Aluminum alloy 6061-T6	Anodic coat	24,950
2/	M23470/7 + dash no.	Carbon steel ASTM A546	Zinc plate	68,400
2/	M23470/11 + dash no.	Cres 304 or 304L or 305 or 316 or 316L	Passivate	68,400

1/ Threads shall be class 3A (UNF-3A) of Handbook H-28 per MIL-S-8879.
2/ Threads shall be class 2A (UNF-2A) of Handbook H-28 per MIL-S-8879.

THIS DOCUMENT PROVIDED BY THE ABBOTT AEROSPACE
TECHNICAL LIBRARY
ABBOTTAEROSPACE.COM
Downloaded from http://www.everyspec.com

TABLE I. Part numbers.

D Nom dia....		.500		.625		.750	
A Dia	Min....	.788		.981		1.176	
	Max....	.812		1.011		1.212	
H	Min....	.250		.313		.375	
	Max....	.270		.332		.395	
Grip range		L	M23470/16 M23470/7 M23470/11	L	M23470/16 M23470/7 M23470/11	L	M23470/16 M23470/7 M23470/11
Min	Max	Length	dash numbers	Length	dash numbers	Length	dash numbers
.062	.188	.844	-1	.906	-33	1.031	-65
.188	.312	.969	-2	1.031	-34	1.156	-66
.312	.438	1.094	-3	1.156	-35	1.281	-67
.438	.562	1.219	-4	1.281	-36	1.406	-68
.562	.688	1.344	-5	1.406	-37	1.531	-69
.688	.812	1.469	-6	1.531	-38	1.656	-70
.812	.938	1.594	-7	1.656	-39	1.781	-71
.938	1.062	1.719	-8	1.781	-40	1.906	-72
1.062	1.188	1.844	-9	1.906	-41	2.031	-73
1.188	1.312	1.969	-10	2.031	-42	2.156	-74
1.312	1.438	2.094	-11	2.156	-43	2.281	-75
1.438	1.562	2.219	-12	2.281	-44	2.406	-76
1.562	1.688	2.344	-13	2.406	-45	2.531	-77
1.688	1.812	2.469	-14	2.531	-46	2.656	-78
1.812	1.938	2.594	-15	2.656	-47	2.781	-79
1.938	2.062	2.719	-16	2.781	-48	2.906	-80
2.062	2.188	2.844	-17	2.906	-49	3.031	-81
2.188	2.312	2.969	-18	3.031	-50	3.156	-82
2.312	2.438	3.094	-19	3.156	-51	3.281	-83
2.438	2.562	3.219	-20	3.281	-52	3.406	-84
2.562	2.688	3.344	-21	3.406	-53	3.531	-85
2.688	2.812	3.469	-22	3.531	-54	3.656	-86
2.812	2.938	3.594	-23	3.656	-55	3.781	-87
2.938	3.062	3.719	-24	3.781	-56	3.906	-88
3.062	3.188	3.844	-25	3.906	-57	4.031	-89
3.188	3.312	3.969	-26	4.031	-58	4.156	-90
3.312	3.438	4.094	-27	4.156	-59	4.281	-91
3.438	3.562	4.219	-28	4.281	-60	4.406	-92
3.562	3.688	4.344	-29	4.406	-61	4.531	-93
3.688	3.812	4.469	-30	4.531	-62	4.656	-94
3.812	3.938	4.594	-31	4.656	-63	4.781	-95
3.938	4.062	4.719	-32	4.781	-64	4.906	-96

THIS DOCUMENT PROVIDED BY THE ABBOTT AEROSPACE
Downloaded from http://www.everyspec.com
TECHNICAL LIBRARY
ABBOTTAEROSPACE.COM

SECTION 508

PIN-RIVET, THREADED, 60° COUNTERSUNK OVAL HEAD, TAPERED SHANK

APPLICABLE DOCUMENTS: MIL-P-23470/8, 12, 17

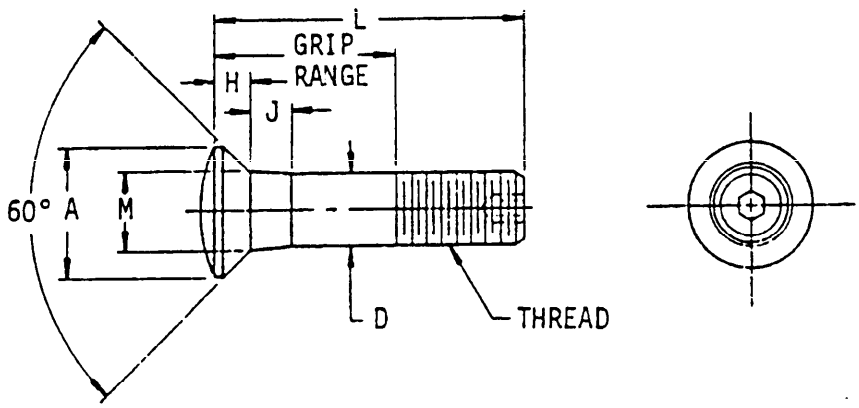

Footnotes	Part Numbers	Material	Protective finish	Shear strength (psi) min
1/	M23470/17 + dash no.	Aluminum alloy 6016-T6	Anodic coat	24,950
2/	M23470/8 + dash no.	Carbon steel ASTM A546	Zinc plate	70,500
2/	M23470/12 + dash no.	Cres steel class 304 or 304L or 305 or 316 or 316L	Passivate	68,400

1/ Threads shall be class 3A (UNF-3A) of Handbook H-28, per MIL-S-8879.
2/ Threads shall be class 2A (UNC-2A) of Handbook H-28, per MIL-S-7742.

THIS DOCUMENT PROVIDED BY THE ABBOTT AEROSPACE
Downloaded from http://www.everyspec.com
TECHNICAL LIBRARY
ABBOTTAEROSPACE.COM

TABLE I. Part numbers.

D Dia nom..		.312		.375		.500		
A Dia	Min.. Max..	.458 .478		.556 .576		.758 .778		
H	Min... Max...	.117 .137		.147 .167		.211 .231		
M Dia of taper	Min... Max...	.332 .342		.395 .405		.520 .530		
J Length of taper	Min... Max...	.125 .187		.156 .219		.219 .281		
Grip range		L	M23470/8 M23470/17 M23470/12	L	M23470/8 M23470/17 M23470/12	L	M23470/8 M23470/17	M23470/12
Min	Max	Length	dash numbers	Length	dash numbers	Length	dash numbers	
.375	.500	1.000	-1	-	-	-	-	-
.500	.625	1.125	-2	1.219	-31	-	-	-
.625	.750	1.250	-3	1.344	-32	1.500	-61	-
.750	.875	1.375	-4	1.469	-33	1.625	-62	-62
.875	1.000	1.500	-5	1.594	-34	1.750	-63	-63
1.000	1.125	1.625	-6	1.719	-35	1.875	-64	-64
1.125	1.250	1.750	-7	1.844	-36	2.000	-65	-65
1.250	1.375	1.875	-8	1.969	-37	2.125	-66	-66
1.375	1.500	2.000	-9	2.094	-38	2.250	-67	-67
1.500	1.625	2.125	-10	2.219	-39	2.375	-68	-68
1.625	1.750	2.250	-11	2.344	-40	2.500	-69	-69
1.750	1.875	2.375	-12	2.469	-41	2.625	-70	-70
1.875	2.000	2.500	-13	2.594	-42	2.750	-71	-71
2.000	2.125	2.625	-14	2.719	-43	2.875	-72	-72
2.125	2.250	2.750	-15	2.844	-44	3.000	-73	-73
2.250	2.375	2.875	-16	2.969	-45	3.125	-74	-74
2.375	2.500	3.000	-17	3.094	-46	3.250	-75	-75
2.500	2.625	3.125	-18	3.219	-47	3.375	-76	-76
2.625	2.750	3.250	-19	3.344	-48	3.500	-77	-77
2.750	2.875	3.375	-20	3.469	-49	3.625	-78	-78
2.875	3.000	3.500	-21	3.594	-50	3.750	-79	-79
3.000	3.125	3.625	-22	3.719	-51	3.875	-80	-80
3.125	3.250	3.750	-23	3.844	-52	4.000	-81	-81
3.250	3.375	3.875	-24	3.969	-53	4.125	-82	-82
3.375	3.500	4.000	-25	4.094	-54	4.250	-83	-83
3.500	3.625	4.125	-26	4.219	-55	4.375	-84	-84
3.625	3.750	4.250	-27	4.344	-56	4.500	-85	-85
3.750	3.875	4.375	-28	4.469	-57	4.625	-86	-86
3.875	4.000	4.500	-29	4.594	-58	4.750	-87	-87

THIS DOCUMENT PROVIDED BY THE ABBOTT AEROSPACE
Downloaded from http://www.everyspec.com
TECHNICAL LIBRARY
ABBOTTAEROSPACE.COM

TABLE I. Part numbers. - Continued

D Dia nom..		.625			.750			.875			1.000	
A Dia	Min..	.930			1.122			1.304			1.485	
	Max..	.970			1.163			1.355			1.542	
H	Min..	.269			.333			.393			.454	
	Max..	.289			.353			.413			.474	
M Dia of taper	Min..	.645			.770			.895			1.020	
	Max..	.655			.780			.905			1.030	
J Length of taper	Min..	.281			.344			.406			.469	
	Max..	.344			.406			.469			.531	
Grip range		L	M23470/8 M23470/17	M23470/12	L	M23470/8 M23470/17	M23470/12	L	M23470/8 M23470/17	M23470/12	L	M23470/8 M23470/17 M23470/12
Min	Max	Length	dash numbers		Length	dash numbers		Length	dash numbers		Length	dash numbers
.625	.750	1.656	-90	-	1.188	-119	-	-	-	-	-	-
.750	.875	1.781	-91	-	1.312	-120	-	-	-	-	-	-
.875	1.000	1.906	-92	-92	2.062	-121	-	-	-	-	-	-
1.000	1.125	2.031	-93	-93	2.188	-122	-122	2.344	-151	-	-	-
1.125	1.250	2.156	-94	-94	2.312	-123	-123	2.469	-152	-152	-	-
1.250	1.375	2.281	-95	-95	2.438	-124	-124	2.594	-153	-153	2.750	-182
1.375	1.500	2.406	-96	-96	2.562	-125	-125	2.719	-154	-154	2.875	-183
1.500	1.625	2.531	-97	-97	2.688	-126	-126	2.844	-155	-155	3.000	-184
1.625	1.750	2.656	-98	-98	2.812	-127	-127	2.969	-156	-156	3.125	-185
1.750	1.875	2.781	-99	-99	2.938	-128	-128	3.094	-157	-157	3.250	-186
1.875	2.000	2.906	-100	-100	3.062	-129	-129	3.219	-158	-158	3.375	-187
2.000	2.125	3.031	-101	-101	3.188	-130	-130	3.344	-159	-159	3.500	-188
2.125	2.250	3.156	-102	-102	3.312	-131	-131	3.469	-160	-160	3.625	-189
2.250	2.375	3.281	-103	-103	3.438	-132	-132	3.594	-161	-161	3.750	-190
2.375	2.500	3.406	-104	-104	3.562	-133	-133	3.719	-162	-162	3.875	-191
2.500	2.625	3.531	-105	-105	3.688	-134	-134	3.844	-163	-163	4.000	-192
2.625	2.750	3.656	-106	-106	3.812	-135	-135	3.969	-164	-164	4.125	-193
2.750	2.875	3.781	-107	-107	3.938	-136	-136	4.094	-165	-165	4.250	-194
2.875	3.000	3.906	-108	-108	4.062	-137	-137	4.219	-166	-166	4.375	-195
3.000	3.125	4.031	-109	-109	4.188	-138	-138	4.344	-167	-167	4.500	-196
3.125	3.250	4.156	-110	-110	4.312	-139	-139	4.469	-168	-168	4.625	-197
3.250	3.375	4.281	-111	-111	4.438	-140	-140	4.594	-169	-169	4.750	-198
3.375	3.500	4.406	-112	-112	4.562	-141	-141	4.719	-170	-170	4.875	-199
3.500	3.625	4.531	-113	-113	4.688	-142	-142	4.844	-171	-171	5.000	-200
3.625	3.750	4.656	-114	-114	4.812	-143	-143	4.969	-172	-172	5.125	-201
3.750	3.875	4.781	-115	-115	4.938	-144	-144	5.094	-173	-173	5.250	-202
3.875	4.000	4.906	-116	-116	5.062	-145	-145	5.219	-174	-174	5.375	-203

THIS DOCUMENT PROVIDED BY THE ABBOTT AEROSPACE
TECHNICAL LIBRARY
ABBOTTAEROSPACE.COM
Downloaded from http://www.everyspec.com

THIS DOCUMENT PROVIDED BY THE ABBOTT AEROSPACE
TECHNICAL LIBRARY
ABBOTTAEROSPACE.COM
Downloaded from http://www.everyspec.com

SECTION 509

PIN-RIVET, THREADED, 90° COUNTERSUNK FLAT HEAD, STRAIGHT SHANK

APPLICABLE DOCUMENT: MIL-P-23470/4, 9, 13

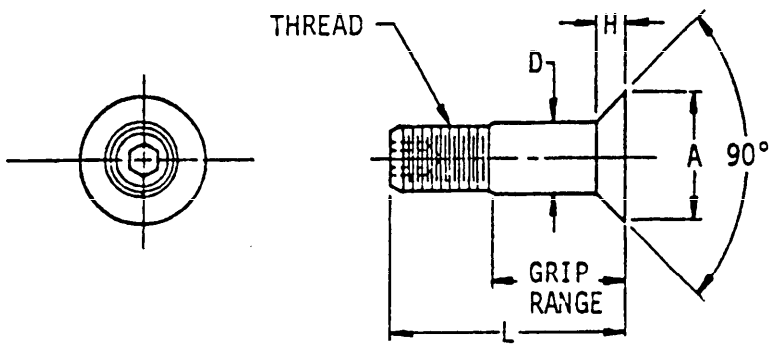

Footnotes	Part Numbers	Materials	Protective finish	Shear strength (psi) min
1/	M23470/13 + dash no.	Aluminum alloy 6061-T6	Anodic coat	24,950
2/	M23470/4 + dash no.	Carbon steel ASTM A546	Cadmium plate	68,400
3/	M23470/9 + dash no.	Cres 304 or 304L or 305 or 316 or 316L	Passivate	68,400

1/: Threads shall be class 3A (UNF-3A) of Handbook H-28 per MIL-S-8879.
2/, 3/: Threads shall be class 2A (UNF-2A) of Handbook H-28 per MIL-S-8879.

THIS DOCUMENT PROVIDED BY THE ABBOTT AEROSPACE
Downloaded from http://www.everyspec.com
TECHNICAL LIBRARY
ABBOTTAEROSPACE.COM

TABLE I. Part numbers.

D Nom.....		.188		.250		.312		.375	
A	Min.....	.340		.455		.569		.682	
	Max.....	.351		.469		.588		.704	
H	Min.....	.075		.101		.127		.152	
	Max.....	.085		.113		.141		.166	
Grip range		L	1/, 2/ or 3/	L	1/, 2/ or 3/	L	1/, 2/ or 3/	L	1/, 2/ or 3/
Min	Max								
.062	.188	.531	-1	.594	-33	.656	-65	.719	-97
.188	.312	.656	-2	.719	-34	.781	-66	.844	-98
.312	.438	.781	-3	.844	-35	.906	-67	.969	-99
.438	.562	.906	-4	.969	-36	1.031	-68	1.094	-100
.562	.688	1.031	-5	1.094	-37	1.156	-69	1.219	-101
.688	.812	1.156	-6	1.219	-38	1.281	-70	1.344	-102
.812	.938	1.281	-7	1.344	-39	1.406	-71	1.469	-103
.938	1.062	1.406	-8	1.469	-40	1.531	-72	1.594	-104
1.062	1.188	1.531	-9	1.594	-41	1.656	-73	1.719	-105
1.188	1.312	1.656	-10	1.656	-42	1.781	-74	1.844	-106
1.312	1.438	1.781	-11	1.844	-43	1.906	-75	1.969	-107
1.438	1.562	1.906	-12	1.969	-44	2.031	-76	2.094	-108
1.562	1.688	2.031	-13	2.094	-45	2.156	-77	2.219	-109
1.688	1.812	2.156	-14	2.219	-46	2.281	-78	2.344	-110
1.812	1.938	2.281	-15	2.344	-47	2.406	-79	2.469	-111
1.938	2.062	2.406	-16	2.469	-48	2.531	-80	2.594	-112
2.062	2.188	2.531	-17	2.594	-49	2.656	-81	2.719	-113
2.188	2.312	2.656	-18	2.656	-50	2.781	-82	2.844	-114
2.312	2.438	2.781	-19	2.844	-51	2.906	-83	2.969	-115
2.438	2.562	2.906	-20	2.969	-52	3.031	-84	3.094	-116
2.562	2.688	3.031	-21	3.094	-53	3.156	-85	3.219	-117
2.688	2.812	3.156	-22	3.219	-54	3.281	-86	3.344	-118
2.812	2.938	3.281	-23	3.344	-55	3.406	-87	3.469	-119
2.938	3.062	3.406	-24	3.469	-56	3.531	-88	3.594	-120
3.062	3.188	3.531	-25	3.594	-57	3.656	-89	3.719	-121
3.188	3.312	3.656	-26	3.656	-58	3.781	-90	3.844	-122
3.312	3.438	3.781	-27	3.844	-59	3.906	-91	3.969	-123
3.438	3.562	3.906	-28	3.969	-60	4.031	-92	4.094	-124
3.562	3.688	4.031	-29	4.094	-61	4.156	-93	4.219	-125
3.688	3.812	4.156	-30	4.219	-62	4.281	-94	4.344	-126
3.812	3.938	4.281	-31	4.344	-63	4.406	-95	4.469	-127
3.938	4.062	4.406	-32	4.469	-64	4.531	-96	4.594	-128

1/, 2/, 3/ (see page 509.1).

THIS DOCUMENT PROVIDED BY THE ABBOTT AEROSPACE
Downloaded from http://www.everyspec.com
TECHNICAL LIBRARY
ABBOTTAEROSPACE.COM

TABLE I. Part numbers. - Continued

D Nom		.438		.500		.625		.750	
A	Min.....	.797		.916		1.139		1.388	
	Max.....	.823		.946		1.175		1.410	
H	Min.....	.179		.208		.258		.311	
	Max.....	.193		.222		.274		.327	
Grip range		L	1/, 2/ or 3/	L	1/, 2/ or 3/	L	1/, 2/ or 3/	L	1/, 2/ or 3/
Min	Max								
.062	.188	.781	-129	.844	-161	.906	-193	1.031	-225
.188	.312	.906	-130	.969	-162	1.031	-194	1.156	-226
.312	.438	1.031	-131	1.094	-163	1.156	-195	1.281	-227
.438	.562	1.156	-132	1.219	-164	1.281	-196	1.406	-228
.562	.688	1.281	-133	1.344	-165	1.406	-197	1.531	-229
.688	.812	1.406	-134	1.469	-166	1.531	-198	1.656	-230
.812	.938	1.531	-135	1.594	-167	1.656	-199	1.781	-231
.938	1.062	1.656	-136	1.719	-168	1.781	-200	1.906	-232
1.062	1.188	1.781	-137	1.844	-169	1.906	-201	2.031	-233
1.188	1.312	1.906	-138	1.969	-170	2.031	-202	2.156	-234
1.312	1.438	2.031	-139	2.094	-171	2.156	-203	2.281	-235
1.438	1.562	2.156	-140	2.219	-172	2.281	-204	2.406	-236
1.562	1.688	2.281	-141	2.344	-173	2.406	-205	2.531	-237
1.688	1.812	2.406	-142	2.469	-174	2.531	-206	2.656	-238
1.812	1.938	2.531	-143	2.594	-175	2.656	-207	2.781	-239
1.938	2.062	2.656	-144	2.719	-176	2.781	-208	2.906	-240
2.062	2.188	2.781	-145	2.844	-177	2.906	-209	3.031	-241
2.188	2.312	2.906	-146	2.969	-178	3.031	-210	3.156	-242
2.312	2.438	3.031	-147	3.094	-179	3.156	-211	3.281	-243
2.438	2.562	3.156	-148	3.219	-180	3.281	-212	3.406	-244
2.562	2.688	3.281	-149	3.344	-181	3.406	-213	3.531	-245
2.688	2.812	3.406	-150	3.469	-182	3.531	-214	3.656	-246
2.812	2.938	3.531	-151	3.594	-183	3.656	-215	3.781	-247
2.938	3.062	3.656	-152	3.719	-184	3.781	-216	3.906	-248
3.062	3.188	3.781	-153	3.844	-185	3.906	-217	4.031	-249
3.188	3.312	3.906	-154	3.969	-186	4.031	-218	4.156	-250
3.312	3.438	4.031	-155	4.094	-187	4.156	-219	4.281	-251
3.438	3.562	4.156	-156	4.219	-188	4.281	-220	4.406	-252
3.562	3.688	4.281	-157	4.344	-189	4.406	-221	4.531	-253
3.688	3.812	4.406	-158	4.469	-190	4.531	-222	4.656	-254
3.812	3.938	4.531	-159	4.594	-191	4.656	-223	4.781	-255
3.938	4.062	4.656	-160	4.719	-192	4.781	-224	4.906	-256

1/. 2/, 3/ (See page 509.1)

THIS DOCUMENT PROVIDED BY THE ABBOTT AEROSPACE
TECHNICAL LIBRARY
ABBOTTAEROSPACE.COM
Downloaded from http://www.everyspec.com

THIS DOCUMENT PROVIDED BY ABBOTT AEROSPACE
Downloaded from http://www.everyspec.com
TECHNICAL LIBRARY
ABBOTTAEROSPACE.COM

SECTION 510

PIN-RIVET, THREADED, NAIL HEAD, STRAIGHT SHANK, CORROSION RESISTANT STEEL

APPLICABLE DOCUMENT: MIL-P-23470/3

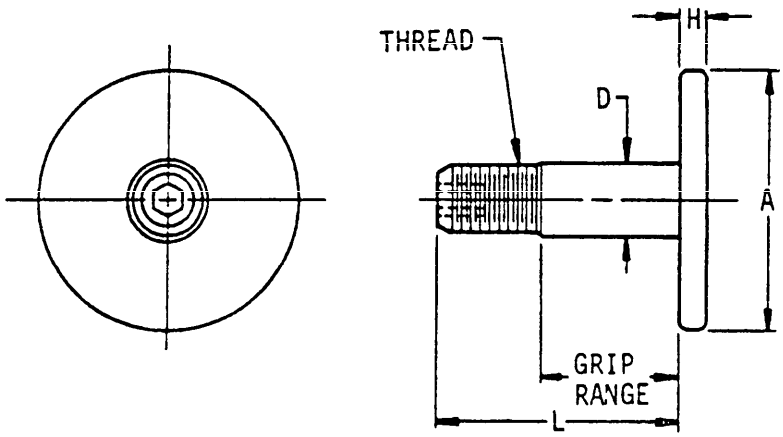

Material	Protective finish	Shear strength (psi) min
Cres 304 or 304L or 305 or 316 or 316L	Passivate	68,400

TABLE I. Pin-rivet, threaded, configuration.

D Dia	A Dia		H	
Nominal	Min	Max	Min	Max
.250	.740	.750	.084	.094

NOTE: Threads shall be class 2A (UNF-2A) of Handbook H-28 per MIL-S-8879.

THIS DOCUMENT PROVIDED BY THE ABBOTT AEROSPACE
TECHNICAL LIBRARY
ABBOTTAEROSPACE.COM
Downloaded from http://www.everyspec.com

TABLE II. M23470/3 Dash numbers.

Grip range		Nominal diameter	
		.250	
Min	Max	L Length	Dash number
.062	.188	.594	-1
.188	.312	.719	-2
.312	.438	.844	-3
.438	.562	.969	-4
.562	.688	1.094	-5
.688	.812	1.219	-6
.812	.938	1.344	-7
.938	1.062	1.469	-8
1.062	1.188	1.594	-9
1.188	1.312	1.719	-10
1.312	1.438	1.844	-11
1.438	1.562	1.969	-12
1.562	1.688	2.094	-13
1.688	1.812	2.219	-14
1.812	1.938	2.344	-15
1.938	2.062	2.469	-16
2.062	2.188	2.594	-17
2.188	2.312	2.719	-18
2.312	2.438	2.844	-19
2.438	2.562	2.969	-20
2.562	2.688	3.094	-21
2.688	2.812	3.219	-22
2.812	2.938	3.344	-23
2.938	3.062	3.469	-24
3.062	3.188	3.594	-25
3.188	3.312	3.719	-26
3.312	3.438	3.844	-27
3.438	3.562	3.969	-28
3.562	3.688	4.094	-29
3.688	3.812	4.219	-30
3.812	3.938	4.344	-31
3.938	4.062	4.469	-32

THIS DOCUMENT PROVIDED BY THE ABBOTT AEROSPACE
Downloaded from http://www.everyspec.com
TECHNICAL LIBRARY
ABBOTTAEROSPACE.COM

SECTION 511

PIN-THREADED SHEAR 100° CSK HEAD

APPLICABLE DOCUMENT: NAS1292 THRU 1296

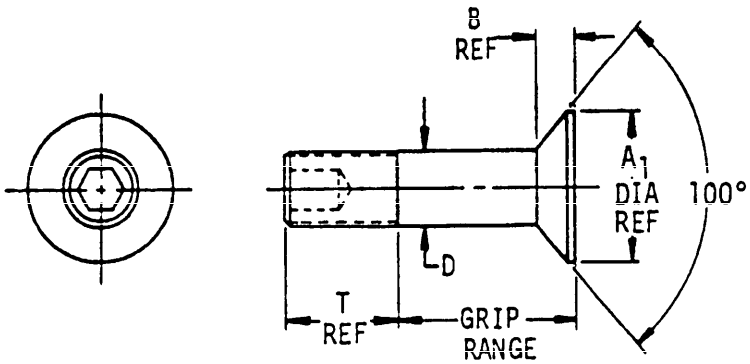

Material	Protective finish	Shear strength (psi) min	Code
Alloy steel H-11	Nickel-zinc alloy plate and hydrogen embrittlement or Diffused nickel-cadmium plate	151,400	J
Nickel base alloy RENE' 41	None	97,000	R

TABLE I. NAS1292 thru 1296 part numbers.

Thread	D Dia max	A_1 Min	B Head height	T Ref	Basic part number
.1640-32 UNJC	.1635	.220	.042	.308	NAS1292
.1900-32 UNJF	.1895	.258	.048	.328	NAS1293
.2500-28 UNJF	.2495	.350	.063	.377	NAS1294
.3125-24 UNJF	.3120	.429	.070	.429	NAS1295
.3750-24 UNJF	.3745	.515	.081	.469	NAS1296

NOTES:

1. The dash number following the material code "J" or "R" indicates grip range in .0625 increments up to and including "-18" (1-1/8).
2. Temperature limitation: H-11: 800° F max
   RENE' 41: 1400° F max

THIS DOCUMENT PROVIDED BY THE ABBOTT AEROSPACE
Downloaded from http://www.everyspec.com
TECHNICAL LIBRARY
ABBOTTAEROSPACE.COM

THIS DOCUMENT PROVIDED BY ABBOTT AEROSPACE
Downloaded from http://www.everyspec.com
TECHNICAL LIBRARY
ABBOTTAEROSPACE.COM

SECTION 512

PIN-THREADED SHEAR PROTRUDING HEAD

APPLICABLE DOCUMENT: NAS1322 THRU 1326

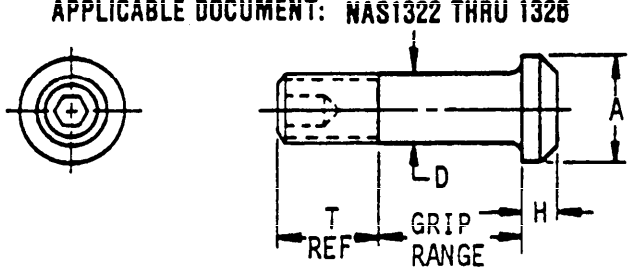

Material	Protective finish	Shear strength (psi) min	Code
Alloy steel H-11	Nickel-zinc alloy plate and hydrogen embrittlement or Diffused nickel-cadmium plate	151,400	J
Nickel base alloy RENE' 41	None	97,000	R

TABLE I. NAS1322 thru 1326 part numbers.

Thread	D Dia max	A Min	B Head	T Ref	Basic part number
.1640-32 UNJC	.1635	.262 .242	.047 .037	.308	NAS1322
.1900-32 UNJF	.1895	.315 .295	.055 .045	.328	NAS1323
.2500-28 UNJF	.2495	.412 .387	.069 .059	.377	NAS1324
.3125-24 UNJF	.3120	.505 .475	.078 .068	.429	NAS1325
.3750-24 UNJF	.3745	.600 .565	.088 .078	.469	NAS1326

NOTES:

1. The dash number following the material code "J" or "R" indicates grip range in .0625 increments up to and including "-18" (1-1/8).
2. Temperature limitation: H-11: 800° F max
   RENE' 41: 1400° F max

THIS DOCUMENT PROVIDED BY THE ABBOTT AEROSPACE
TECHNICAL LIBRARY
ABBOTTAEROSPACE.COM
Downloaded from http://www.everyspec.com

THIS DOCUMENT PROVIDED BY THE ABBOTT AEROSPACE
Downloaded from http://www.everyspec.com
TECHNICAL LIBRARY
ABBOTTAEROSPACE.COM

SECTION 601

FASTENER, BLIND, HIGH STRENGTH, PULL TYPE, POSITIVE MECHANICAL LOCK, 100° FLUSH HEAD, CORROSION RESISTING STEEL 95 KSI Fsu

APPLICABLE DOCUMENT: MS21140

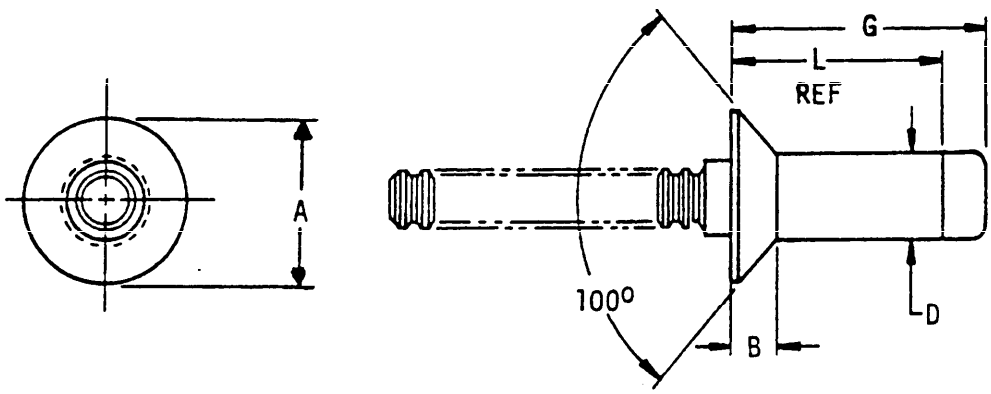

Material	Protective finish	Shear strength (psi) min
Cres 15Cr-26Ni	Passivate or cadmium plate	95,000

TABLE I. Rivet configuration.

D Nom size	B Max	A Dia
.156	.074	.334
.188	.082	.387
.250	.108	.508
.312	.140	.635
.375	.168	.763

TABLE II. MS21140 Dash numbers.

.156 Diameter					.188 Diameter					.250 Diameter				
Grip range		C Max	L	Grip dash no.	Grip range		C Max	L	Grip dash no.	Grip range		C Max	L	Grip dash no.
Min	Max				Min	Max				Min	Max			
.094	.157	.404	.280	-0502	.094	.157	.475	.329	-0602	-	-	-	-	-
.156	.220	.466	.342	-0503	.156	.220	.511	.365	-0603	.156	.220	.586	.406	-0803
.219	.282	.529	.405	-0504	.219	.282	.574	.428	-0604	.219	.282	.648	.469	-0804
.281	.345	.592	.467	-0505	.281	.345	.636	.490	-0605	.281	.345	.710	.531	-0805
.344	.407	.654	.530	-0506	.344	.407	.699	.553	-0606	.344	.407	.773	.594	-0806
.406	.470	.716	.592	-0507	.406	.470	.761	.615	-0607	.406	.470	.836	.656	-0807
.469	.532	.779	.655	-0508	.469	.532	.824	.678	-0608	.469	.532	.898	.719	-0808
.531	.595	.842	.717	-0509	.531	.595	.886	.740	-0609	.531	.595	.960	.781	-0809
.594	.657	.904	.780	-0510	.594	.657	.949	.803	-0610	.594	.657	1.023	.844	-0810
.656	.720	.966	.842	-0511	.656	.720	1.011	.865	-0611	.656	.720	1.086	.906	-0811
.719	.782	1.029	.905	-0512	.719	.782	1.074	.928	-0612	.719	.782	1.148	.969	-0812
.781	.845	1.092	.967	-0513	.781	.845	1.136	.990	-0613	.781	.845	1.210	1.031	-0813
.844	.907	1.154	1.030	-0514	.844	.907	1.199	1.053	-0614	.844	.907	1.273	1.094	-0814
.906	.970	1.216	1.092	-0515	.906	.970	1.261	1.115	-0615	.906	.970	1.336	1.156	-0815
.969	1.032	1.279	1.155	-0516	.969	1.032	1.324	1.178	-0616	.969	1.032	1.398	1.219	-0816

.312 Diameter					.375 Diameter				
Grip range		C Max	L	Grip dash no.	Grip range		C Max	L	Grip dash no.
Min	Max				Min	Max			
-	-	-	-	-	-	-	-	-	-
.219	.282	.713	.506	-1004	.219	.282	.790	.548	-1204
.281	.345	.775	.568	-1005	.281	.345	.853	.610	-1205
.344	.407	.838	.631	-1006	.344	.407	.915	.673	-1206
.406	.470	.900	.693	-1007	.406	.470	.977	.735	-1207
.469	.532	.963	.756	-1008	.469	.532	1.040	.798	-1208
.531	.595	1.025	.818	-1009	.531	.595	1.103	.860	-1209
.594	.657	1.088	.881	-1010	.594	.657	1.165	.923	-1210
.656	.720	1.150	.943	-1011	.656	.720	1.227	.985	-1211
.719	.782	1.213	1.006	-1012	.719	.782	1.290	1.048	-1212
.781	.845	1.275	1.068	-1013	.781	.845	1.353	1.110	-1213
.844	.907	1.338	1.131	-1014	.844	.907	1.415	1.173	-1214
.906	.970	1.400	1.193	-1015	.906	.970	1.477	1.235	-1215
.969	1.032	1.463	1.256	-1016	.96	1.032	1.540	1.298	-1216

THIS DOCUMENT IS BEING PROVIDED BY ABBOTT AEROSPACE
Downloaded from http://www.everyspec.com
TECHNICAL LIBRARY
ABBOTTAEROSPACE.COM

THIS DOCUMENT PROVIDED BY THE ABBOTT AEROSPACE
Downloaded from http://www.everyspec.com
TECHNICAL LIBRARY
ABBOTTAEROSPACE.COM

SECTION 602

FASTENER, BLIND, HIGH STRENGTH, PULL TYPE, POSITIVE MECHANICAL LOCK, PROTRUDING HEAD, CORROSION RESISTING STEEL 95 KSI Fsu,

APPLICABLE DOCUMENT: MS21141

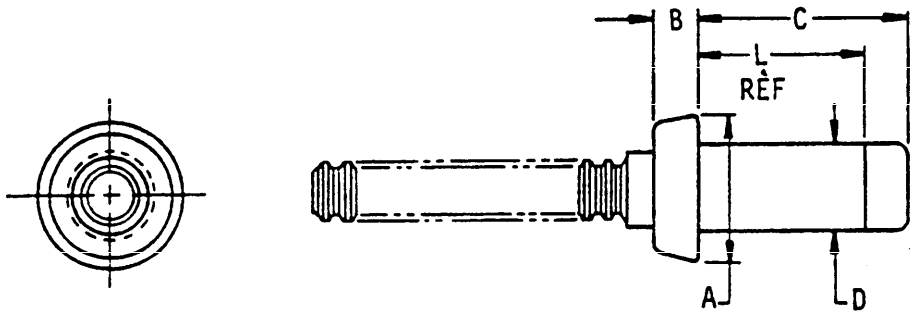

Material	Protective finish	Shear strength (psi) min
Cres 15Cr-26Ni	Passivate or cadmium plate	95,000

TABLE I. Rivet configuration.

Nom size	A Dia	B
.156	.272 .250	.070 .062
.188	.332 .305	.135 .125
.250	.432 .400	.140 .130
.312	.522 .480	.141 .131
.375	.627 .580	.205 .195

TABLE II. MS21141 Dash numbers.

.156 Dia					.188 Dia					.250 Dia				
Grip range		C Max	L	Grip dash no.	Grip range		C Max	L	Grip dash no.	Grip range		C max	L	Grip dash no.
Min	Max				Min	Max				Min	Max			
.031	.095	.342	.217	-0501	–	–	–	–	–	–	–	–	–	–
.094	.157	.404	.280	-0502	.094	.157	.449	.303	-0602	.094	.157	.523	.344	-0802
.156	.220	.466	.342	-0503	.156	.220	.511	.365	-0603	.156	.220	.586	.406	-0803
.219	.282	.529	.405	-0504	219	.282	.574	.428	-0604	.219	.282	.648	.469	-0804
.281	.345	.592	.467	-0505	.281	.345	.636	.490	-0605	.281	.345	.710	.531	-0805
.344	.407	.654	.530	-0506	.344	.407	.699	.553	-0606	.344	.407	.773	.594	-0806
.406	.470	.716	.592	-0507	.406	.470	.761	.615	-0607	.406	.470	.836	.656	-0807
.469	.532	.779	.655	-0508	.469	.532	.824	.678	-0608	.469	.532	.898	.719	-0808
.531	.595	.842	.717	-0509	.531	.595	.886	.740	-0609	.531	.595	.960	.781	-0809
.594	.657	.904	.780	-0510	.594	.657	.949	.803	-0610	.594	.657	1.023	.844	-0810
.656	.720	.966	.842	-0511	.656	.720	1.011	.865	-0611	.656	.720	1.086	.906	-0811
.719	.782	1.029	.905	-0512	.719	.782	1.074	.928	-0612	.719	.782	1.148	.969	-0812
.781	.845	1.092	.967	-0513	.781	.845	1.136	.990	-0613	.781	.845	1.210	1.031	-0813
.844	.907	1.154	1.030	-0514	.844	.907	1.199	1.053	-0614	.844	.907	1.273	1.094	-0814
.906	.970	1.216	1.092	-0515	.906	.970	1.261	1.115	-0615	.906	.970	1.336	1.156	-0815
.969	1.032	1.279	1.155	-0516	.969	1.032	1.324	1.178	-0616	.969	1.032	1.398	1.219	-0816

.312 Dia					.375 Dia				
Grip range		C Max	L	Grip dash no.	Grip range		C Max	L	Grip dash no.
Min	Max				Min	Max			
–	–	–	–	–	–	–	–	–	–
.094	.157	.588	.381	-1002	.094	.157	.665	.423	-1202
.156	.220	.650	.443	-1003	.156	.220	.727	.485	-1203
.219	.282	.713	.506	-1004	.219	.282	.790	.548	-1204
.281	.345	.775	.568	-1005	.281	.345	.853	.610	-1205
.344	.407	.838	.631	-1006	.344	.407	.915	.673	-1206
.406	.470	.900	.693	-1007	.406	.470	.977	.735	-1207
.469	.532	.963	.756	-1008	.469	.532	1.040	.798	-1208
.531	.595	1.025	.818	-1009	.531	.595	1.103	.860	-1209
.594	.657	1.088	.881	-1010	.594	.657	1.165	.923	-1210
.656	.720	1.150	.943	-1011	.656	.720	1.227	.985	-1211
.719	.782	1.213	1.000	-1012	.719	.782	1.290	1.048	-1212
.781	.845	1.275	1.068	-1013	.781	.845	1.353	1.110	-1213
.844	.907	1.338	1.131	-1014	.844	.907	1.415	1.173	-1214
.906	.970	1.400	1.193	-1015	.906	.970	1.477	1.235	-1215
.969	1.032	1.463	1.256	-1016	.969	1.032	1.540	1.298	-1216

602.2

TECHNICAL LIBRARY
ABBOTTAEROSPACE.COM

THIS DOCUMENT PROVIDED BY THE ABBOTT AEROSPACE
Downloaded from http://www.everyspec.com
TECHNICAL LIBRARY
ABBOTTAEROSPACE.COM

SECTION 603

FASTENER-BLIND, INTERNALLY THREADED, EXTERNAL SLEEVE, FLUSH HEAD, SELF-LOCKING

APPLICABLE DOCUMENTS: NAS1670, NAS1672

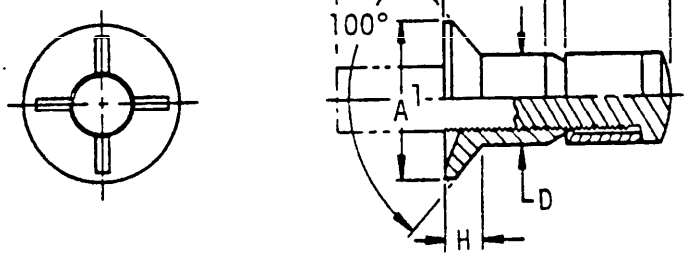

Footnotes	Part numbers	Material	Protective finish	Shear strength (psi)
1/	NAS1672 + dash no.	Corrosion and heat resisting steel A286	Passivate	63,900 to 72,100
2/	NAS1670 + dash no.	Alloy steel	Cadmium plate	78,225 to 88,275

1/ Temperature limitation; 1200°F max.
2/ Temperature limitation; 450°F max.

THIS DOCUMENT PROVIDED BY THE ABBOTT AEROSPACE
Downloaded from http://www.everyspec.com
TECHNICAL LIBRARY
ABBOTTAEROSPACE.COM

TABLE I. Part numbers.

D Nom		.164		.200		.260		.312		.375		Second dash number
A [1]		.296		.342		.463		.577		.696		
C Max		.268		.303		.354		.423		.510		
H Ref		.069		.077		.102		.134		.160		
First dash no.		-08L( )		-3L( )		-4L( )		-5L( )		-6L( )		
G	Grip range											
	Min	Max	1/	2/	1/	2/	1/	2/	1/	2/	1/	2/	
			L Length										
.156	.094	.156	.795	.733	.916	.853	-	-	-	-	-	-	-2
.219	.157	.219	.858	.795	.978	.916	1.006	.944	1.158	1.096	-	-	-3
.281	.220	.281	.920	.858	1.041	.978	1.069	1.006	1.221	1.158	1.304	-	-4
.344	.282	.344	.983	.920	1.103	1.041	1.131	1.069	1.283	1.221	1.367	1.242	-5
.406	.345	.406	1.045	.983	1.166	1.103	1.194	1.131	1.346	1.283	1.429	1.367	-6
.469	.407	.469	1.108	1.045	1.228	1.166	1.256	1.194	1.408	1.346	1.492	1.429	-7
.531	.470	.531	1.170	1.108	1.291	1.228	1.319	1.256	1.471	1.408	1.554	1.492	-8
.594	.532	.594	1.233	1.170	1.353	1.291	1.381	1.319	1.533	1.471	1.617	1.554	-9
.656	.595	.656	1.295	1.233	1.416	1.353	1.444	1.381	1.596	1.533	1.679	1.617	-10
.719	.657	.719	1.358	1.295	1.478	1.416	1.506	1.444	1.658	1.596	1.742	1.679	-11
.781	.720	.781	1.420	1.358	1.541	1.478	1.569	1.506	1.721	1.658	1.804	1.742	-12
.844	.782	.844	1.483	1.420	1.603	1.541	1.631	1.569	1.783	1.721	1.867	1.804	-13
.906	.845	.906	1.545	1.483	1.666	1.603	1.694	1.631	1.846	1.783	1.929	1.867	-14
.969	.907	.969	1.608	1.545	1.728	1.666	1.756	1.694	1.908	1.846	1.992	1.929	-15
1.031	.970	1.031	1.670	1.608	1.791	1.728	1.819	1.756	1.971	1.908	2.054	1.992	-16
1.094	1.032	1.094	-	-	-	1.791	-	1.819	-	1.971	-	2.054	-17
1.156	1.095	1.156	-	-	-	1.853	-	1.881	-	2.033	-	2.117	-18
1.219	1.157	1.219	-	-	-	1.916	-	1.944	-	2.096	-	2.179	-19
1.281	1.220	1.281	-	-	-	1.978	-	2.006	-	2.158	-	2.242	-20
1.344	1.282	1.344	-	-	-	2.041	-	2.069	-	2.221	-	2.304	-21
1.406	1.345	1.406	-	-	-	2.103	-	2.131	-	2.283	-	2.367	-22
1.469	1.407	1.469	-	-	-	2.166	-	2.194	-	2.346	-	2.429	-23
1.531	1.470	1.531	-	-	-	2.228	-	2.256	-	2.408	-	2.492	-24

THIS DOCUMENT PROVIDED BY GHX ABBOTT AEROSPACE
Downloaded from http://www.everyspec.com
TECHNICAL LIBRARY
ABBOTTAEROSPACE.COM

SECTION 604

FASTENER-BLIND, INTERNALLY THREADED, EXTERNAL SLEEVE, PROTRUDING HEAD, SELF-LOCKING

APPLICABLE DOCUMENT: NAS 1669, NAS 1671, NAS 1673

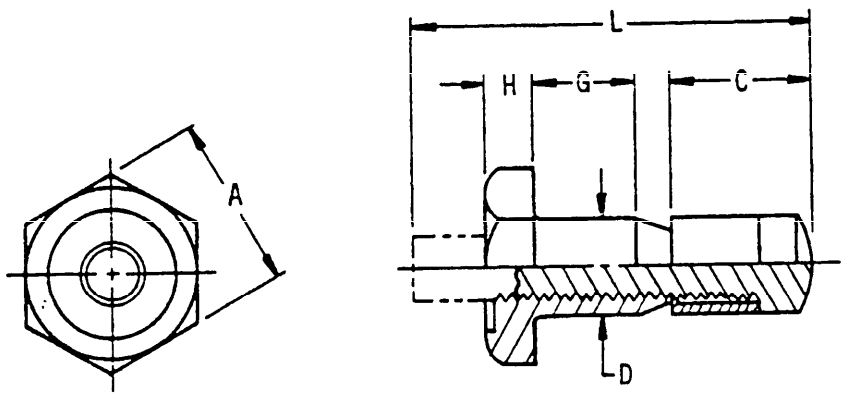

Footnotes	Part numbers	Material	Protective finish	Shear strength (psi)
1/	NAS 1669	Alloy steel	Cadmium plate	78,225 to 88,275
2/	NAS 1671	Corrosion and heat resisting steel A286	Passivate	63,900 to 72,100
3/	NAS 1673	Aluminum alloy 7075	Anodize (clear)	45,400 to 50,000

1/ Temperature limitation; 450°F max.
2/ Temperature limitation; 1200°F max.
3/ Temperature limitation; 250°F max.

TABLE II. Part numbers.

D Nom			.164		.200		.260		.312	.375	1/	2/ or 3/
A	Max		.250	.283	.312	.346	.375	.472	.437	.500		
	Min		.244	.277	.305	.332	.367	.458	.429	.491		
C Max			.268		.303		.354		.423	.510		
H Max			.096		.113		.135		.160	.190	Second dash no.	
Footnote			1/ or 2/	3/	1/ or 2/	3/	1/ or 2/	3/	1/ or 2/	1/ or 2/		
First dash no.			-08L ( )		-3L ( )		-4L ( )		-5L ( )	-6L ( )		
G	Grip range		L Length									
	Min	Max										
.093	.031	.093	.733		.874						-1	-1
.156	.094	.156	.795		.936		1.006		1.158		-2	-2
.219	.157	.219	.858		.999		1.069		1.221	1.304	-3	-3
.281	.220	.281	.920		1.061		1.131		1.283	1.367	-4	-4
.344	.282	.344	.983		1.124		1.194		1.346	1.429	-5	-5
.406	.345	.406	1.045		1.186		1.256		1.408	1.492	-6	-6
.469	.407	.469	1.108		1.249		1.319		1.471	1.554	-7	-7
.531	.470	.531	1.170		1.311		1.381		1.533	1.617	-8	-8
.594	.532	.594	1.233		1.374		1.444		1.596	1.679	-9	-9
.656	.595	.656	1.295		1.436		1.506		1.658	1.742	-10	-10
.719	.657	.719	1.358		1.499		1.569		1.721	1.804	-11	-11
.781	.720	.781	1.420		1.561		1.631		1.783	1.867	-12	-12
.844	.782	.844	1.483		1.624		1.694		1.846	1.929	-13	-13
.906	.845	.906	1.545		1.686		1.756		1.908	1.992	-14	-14
.969	.907	.969	1.608		1.749		1.819		1.971	2.054	-15	-15
1.031	.970	1.031	1.670		1.811		1.881		2.033	2.117	-16	-16
1.094	1.032	1.094	-		1.874		1.944		2.096	2.179	-17	-
1.156	1.095	1.156	-		1.936		2.006		2.158	2.242	-18	-
1.219	1.157	1.219	-		1.999		2.069		2.221	2.304	-19	-
1.281	1.220	1.281	-		2.061		2.131		2.283	2.367	-20	-
1.344	1.282	1.344	-		2.124		2.194		2.346	2.429	-21	-
1.406	1.345	1.406	-		2.186		2.256		2.408	2.492	-22	-
1.469	1.407	1.469	-		2.249		2.319		2.471	2.554	-23	-
1.531	1.470	1.531	-		2.311		2.381		2.533	2.617	-24	-

1/, 2/, 3/, (see page 604.1).

THIS DOCUMENT WAS DOWNLOADED FROM THE ABBOTT AEROSPACE TECHNICAL LIBRARY
Downloaded from http://www.everyspec.com
ABBOTT AEROSPACE
TECHNICAL LIBRARY
ABBOTTAEROSPACE.COM

THIS DOCUMENT PROVIDED BY THE ABBOTT AEROSPACE
TECHNICAL LIBRARY
ABBOTTAEROSPACE.COM
Downloaded from http://www.everyspec.com

SECTION 605

FASTENER-BLIND, INTERNALLY THREADED, EXTERNAL SLEEVE, LIGHTWEIGHT, MILLABLE HEAD, SELF-LOCKING

APPLICABLE DOCUMENT: NAS1674

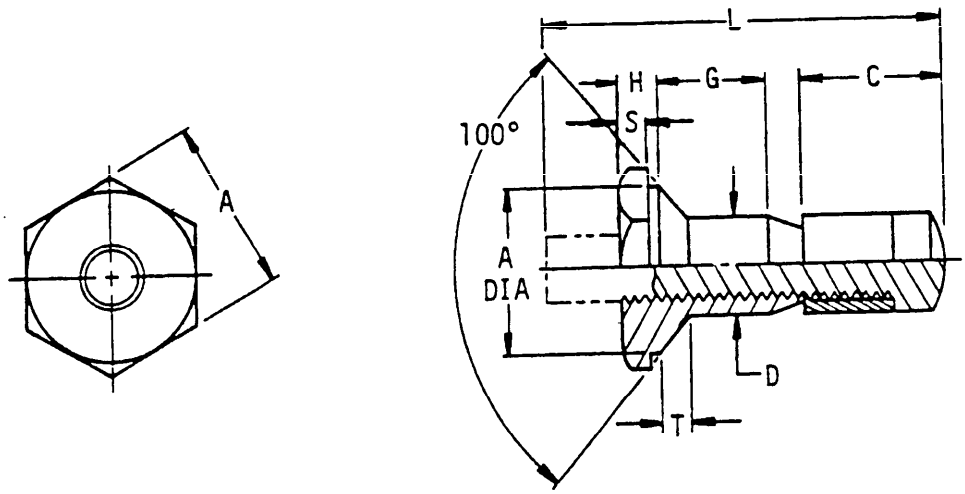

Material	Protective finish	Shear strength (psi)
Aluminum 7075	Anodize (clear)	45,400 to 50,000

TABLE I. Rivet configuration.

D Nom dia	A	C Max	H	S	T Ref	Basic part number
.164	.283 .277	.268	.074 .067	.054 .044	.049	NAS1674-08L( )
.200	.346 .332	.303	.079 .072	.059 .049	.061	NAS1674-3L( )
.260	.472 .458	.354	.079 .072	.059 .049	.088	NAS1674-4L( )

THIS DOCUMENT PROVIDED BY THE ABBOTT AEROSPACE
Downloaded from http://www.everyspec.com
TECHNICAL LIBRARY
ABBOTTAEROSPACE.COM

TABLE II. NAS1674 Dash numbers.

G	Grip range		L			Second dash number
	Min	Max	-08L( )	-3L( )	-4L( )	
.156	.094	.156	.795	.936	.960	-2
.219	.157	.219	.858	.999	1.023	-3
.281	.220	.281	.920	1.061	1.085	-4
.344	.282	.344	.983	1.124	1.148	-5
.406	.345	.406	1.045	1.186	1.210	-6
.469	.407	.469	1.108	1.249	1.273	-7
.531	.470	.531	1.170	1.311	1.335	-8
.594	.532	.594	1.233	1.374	1.398	-9
.656	.595	.656	1.295	1.436	1.460	-10
.719	.657	.719	1.358	1.499	1.523	-11
.781	.720	.781	1.420	1.561	1.585	-12
.844	.782	.844	1.483	1.624	1.648	-13
.906	.845	.906	1.545	1.686	1.710	-14
.969	.907	.969	1.608	1.749	1.773	-15
1.031	.970	1.031	1.670	1.811	1.835	-16
1.094	1.032	1.094	-	1.874	1.898	-17
1.156	1.095	1.156	-	1.936	1.960	-18
1.219	1.157	1.219	-	1.999	2.023	-19
1.281	1.220	1.281	-	2.061	2.085	-20

THIS DOCUMENT PROVIDED BY THE ABBOTT AEROSPACE
Downloaded from http://www.everyspec.com
TECHNICAL LIBRARY
ABBOTTAEROSPACE.COM

SECTION 606

RIVET, BLIND-COUNTERSUNK HEAD, DRIVE TYPE

APPLICABLE DOCUMENT: MS24661

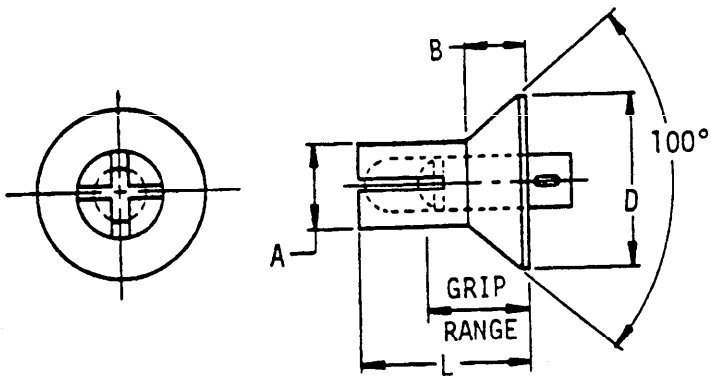

Material	Protective finish	Shear strength (psi) min
Aluminum alloy 2117-T4	Anodized	26,000
5056-H32	Plain	24,000
Carbon steel	Cadmium plate	32,000

THIS DOCUMENT PROVIDED BY THE ABBOTT AEROSPACE
Downloaded from http://www.everyspec.com
TECHNICAL LIBRARY
ABBOTTAEROSPACE.COM

TABLE I. Rivet configuration dash numbers.

A Dia	B Head height ref	D Head dia	Grip range Min	Grip range Max	L Length	MS24661 Dash no. Aluminum 2117	Aluminum 5056	Carbon steel
.125	.042	.225	.078	.109	.188	-5	-168	-6
			.110	.140	.219	-7	-169	-8
			.141	.171	.250	-9	-170	-10
			.172	.203	.281	-11	-171	-12
			.204	.234	.312	-13	-172	-14
			.235	.265	.344	-15	-173	-16
			.266	.296	.375	-17	-174	-18
			.297	.328	.406	-19	-175	-20
			.329	.359	.438	-21	-176	-22
			.360	.390	.469	-23	-177	-24
			.391	.421	.500	-25	-178	-26
.156	.055	.286	.109	.140	.250	-31	-179	-32
			.141	.171	.281	-33	-180	-34
			.172	.203	.312	-35	-181	-36
			.204	.234	.344	-37	-182	-38
			.235	.265	.375	-39	-183	-40
			.266	.296	.406	-41	-184	-42
			.297	.328	.438	-43	-185	-44
			.329	.359	.469	-45	-186	-46
			.360	.390	.500	-47	-187	-48
			.391	.421	.531	-49	-188	-50
			.422	.453	.562	-51	-189	-52
			.454	.484	.594	-53	-190	-54
			.485	.515	.625	-55	-191	-56
			.516	.546	.656	-57	-192	-58
			.547	.578	.688	-59	-193	-60
			.579	.609	.719	-61	-194	-62
			.610	.640	.750	-63	-195	-64
.188	.070	.353	.109	.171	.281	-150	-196	-214
			.172	.234	.344	-151	-197	-215
			.235	.296	.406	-152	-198	-216
			.297	.359	.469	-153	-199	-217
			.360	.421	.531	-154	-200	-218
			.422	.484	.594	-155	-201	-219
			.485	.546	.656	-156	-202	-220
			.547	.609	.719	-157	-203	-221
			.610	.671	.781	-158	-204	-222
.250	.095	.476	.109	.171	.281	-159	-205	-223
			.172	.234	.344	-160	-206	-224
			.235	.296	.406	-161	-207	-225
			.297	.359	.469	-162	-208	-226
			.360	.421	.531	-163	-209	-227
			.422	.484	.594	-164	-210	-228
			.485	.546	.656	-165	-211	-229
			.547	.609	.719	-166	-212	-230
			.610	.671	.781	-167	-213	-231

THIS DOCUMENT PROVIDED BY THE ABBOTT AEROSPACE
Downloaded from http://www.everyspec.com
TECHNICAL LIBRARY
ABBOTTAEROSPACE.COM

SECTION 607

RIVET-BLIND, 100° FLUSH HEAD, LOCKED SPINDLE

APPLICABLE DOCUMENT: NAS1399

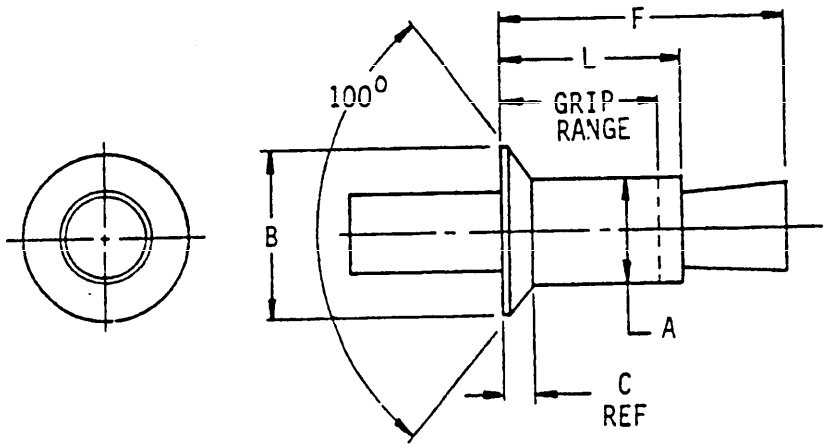

Material	Protective finish	Shear strength (psi)
Aluminum alloy 5056F	Anodize or chemical surface treatment	19,750 to 31,265
Aluminum alloy 2017-T4	Anodize or chemical surface treatment	25,025 to 40,275
Nickel copper alloy (monel)	Cadmium plate or silver plate	36,325 to 57,875
CRES A-286	Cadmium plate or silver plate	49,350 to 79,250

TABLE I. Rivet configuration.

A Dia	B Dia	C Ref	Rivet diameter number
.125	.225	.042	4
.156	.286	.055	5
.190	.353	.070	6
.250	.476	.095	8

THIS DOCUMENT PROVIDED BY THE ABBOTT AEROSPACE
Downloaded from http://www.everyspec.com
TECHNICAL LIBRARY
ABBOTTAEROSPACE.COM

TABLE II. NAS1399 Dash numbers.

NAS1399( )4 .125 dia				NAS1399( )5 .156 dia				NAS1399( )6 .190 dia				NAS1399( )8 .250 dia				Grip dash no.
L Length max	Grip range		F Max	L Length max	Grip range		F Max	L Length max	Grip range		F Max	L Length max	Grip range		F Max	
	Min	Max			Min	Max			Min	Max			Min	Max		
.260	.063	.125	.45	.263	.065	.125	.44	.287	.080	.125	.48	-	-	-	-	-2
.323	.126	.187	.57	.326	.126	.187	.56	.350	.126	.187	.60	.385	.126	.187	.63	-3
.385	.188	.250	.69	.388	.188	.250	.67	.412	.188	.250	.72	.448	.188	.250	.75	-4
.448	.251	.312	.81	.451	.251	.312	.79	.475	.251	.312	.83	.510	.251	.312	.87	-5
.510	.313	.375	.93	.513	.313	.375	.91	.537	.313	.375	.95	.573	.313	.375	.99	-6
-	-	-	-	.576	.376	.437	1.03	.600	.376	.437	1.07	.635	.376	.437	1.11	-7
-	-	-	-	.638	.438	.500	1.15	.662	.438	.500	1.19	.698	.438	.500	1.23	-8
-	-	-	-	-	-	-	-	.725	.501	.562	1.31	.760	.501	.562	1.34	-9
-	-	-	-	-	-	-	-	.787	.563	.625	1.48	.823	.563	.625	1.52	-10
-	-	-	-	-	-	-	-	.850	.626	.687	1.60	.885	.626	.687	1.64	-11
-	-	-	-	-	-	-	-	.912	.688	.750	1.72	.948	.688	.750	1.77	-12
-	-	-	-	-	-	-	-	-	-	-	-	1.010	.751	.812	1.89	-13
-	-	-	-	-	-	-	-	-	-	-	-	1.073	.813	.875	2.01	-14

THIS DOCUMENT PROVIDED BY THE ABBOTT AEROSPACE
Downloaded from http://www.everyspec.com
TECHNICAL LIBRARY
ABBOTTAEROSPACE.COM

SECTION 608

RIVET-BLIND, 100° FLUSH HEAD, MECHANICALLY LOCKED SPINDLE BULBED

APPLICABLE DOCUMENT: NAS1739

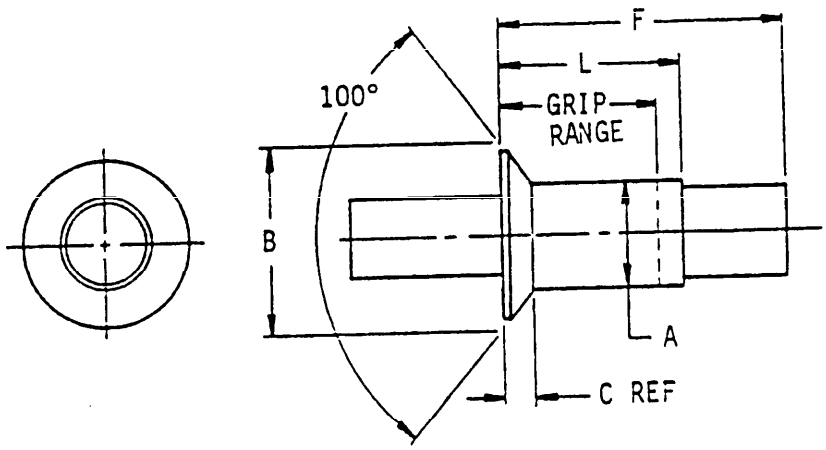

Material	Protective finish	Shear strength (psi)
Aluminum 5056	Anodize or chemical surface treatment	36,300 to 50,500
Nickel, copper alloy (Monel)	None or cadmium plate	43,800 to 73,000

TABLE I. Rivet configuration.

A Dia	B Dia	C Ref
.140	.225	.035
.173	.286	.047
.201	.353	.063

THIS DOCUMENT PROVIDED BY THE ABBOTT AEROSPACE
TECHNICAL LIBRARY
ABBOTTAEROSPACE.COM
Downloaded from http://www.everyspec.com

TABLE II. NAS1739 Dash numbers.

NAS1739 ( ) 4 (.125 DIA)				NAS1739 ( ) 5 (.156 DIA)				NAS1739 ( ) 6 (.188 DIA)				
Grip range		L Length max	F Max	Grip range		L Length max	F max	Grip range		L Length max	F Max	Grip dash no.
Min	Max			Min	Max			Min	Max			
.045	.062	.219	.38	-	-	-	-	-	-	-	-	-1
.063	.125	.281	.44	.063	.125	.312	.48	.073	.125	.344	.51	-2
.126	.187	.344	.50	.126	.187	.375	.54	.126	.187	.406	.58	-3
.188	.250	.406	.57	.188	.250	.437	.60	.188	.250	.469	.64	-4
.251	.312	.469	.63	.251	.312	.500	.67	.251	.312	.531	.70	-5
-	-	-	-	.313	.375	.562	.73	.313	.375	.594	.76	-6
-	-	-	-	-	-	-	-	.376	.437	.656	.83	-7
-	-	-	-	-	-	-	-	.438	.500	.719	.89	-8

THIS DOCUMENT PROVIDED BY THE ABBOTT AEROSPACE
Downloaded from http://www.everyspec.com
TECHNICAL LIBRARY
ABBOTTAEROSPACE.COM

SECTION 609

RIVET, BLIND-GENERAL PURPOSE, BULBED, 100° FLUSH HEAD, MECHANICALLY-LOCKED-SPINDLE

APPLICABLE DOCUMENT: NAS1921

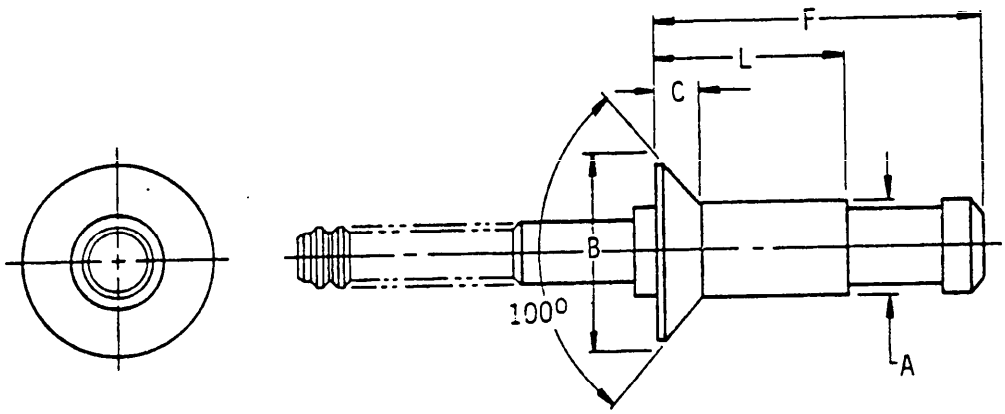

Material	Protective finish	Shear strength (psi)
Aluminum 5056	None	38,400 to 40,400
Cres A-286	Passivate or cadmium plate or aluminum coating	84,600 to 88,900
Nickel, copper alloy (Monel)	None or cadmium plate or aluminum coating	79,700 to 83,200

TABLE I. Rivet configuration.

A Dia	B Dia	C Ref	Dia dash number
.125	.225	.042	-04
.156	.286	.055	-05
.187	.353	.070	-06

TABLE II. NAS1921 Dash numbers.

NAS1919*04 (.125 DIA)				NAS1919*05 (.156 DIA)				NAS1919*06 (.190 DIA)				
Grip range		L Length ref	F Max	Grip range		L Length ref	F Max	Grip range		L Length ref	F Max	Grip dash no.
Min	Max			Min	Max			Min	Max			
.057	.078	.213	.342	.075	.100	.238	.418	-	-	-	-	01
.063	.125	.260	.391	.080	.125	.263	.446	.100	.125	.287	.500	02
.126	.187	.323	.516	.126	.187	.326	.541	.126	.187	.350	.571	03
.188	.250	.385	.641	.188	.250	.388	.666	.188	.250	.412	.696	04
.251	.312	.448	.766	.251	.312	.451	.791	.251	.312	.475	.821	05
.313	.375	.510	.891	.313	.375	.513	.916	.313	.375	.537	.946	06
-	-	-	-	.376	.437	.576	1.041	.376	.437	.600	1.071	07
-	-	-	-	.438	.500	.638	1.166	.438	.500	.662	1.196	08
-	-	-	-	.501	.562	.701	1.291	.501	.562	.725	1.321	09
-	-	-	-	.563	.625	.763	1.416	.563	.625	.787	1.446	10
-	-	-	-	-	-	-	-	.626	.687	.850	1.571	11
-	-	-	-	-	-	-	-	.688	.750	.912	1.696	12
-	-	-	-	-	-	-	-	-	-	-	-	13
-	-	-	-	-	-	-	-	-	-	-	-	14

This Document Provided from http://www.everyspec.com
TECHNICAL LIBRARY
ABBOTTAEROSPACE.COM

THIS DOCUMENT PROVIDED BY THE ABBOTT AEROSPACE
TECHNICAL LIBRARY
ABBOTTAEROSPACE.COM
Downloaded from http://www.everyspec.com

SECTION 610

RIVET, BLIND-GENERAL PURPOSE, BULBED, PROTRUDING HEAD, MECHANICALLY-LOCKED-SPINDLE

APPLICABLE DOCUMENT: NAS1919

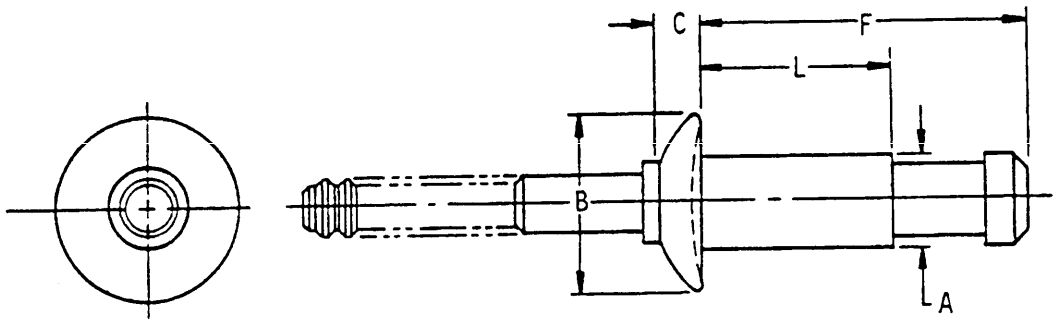

Material	Protective finish	Shear strength (psi)
Aluminum 5056	None	38,400 to 40,000
Cres A-286	Passivate or cadmium plate or aluminum coating	84,600 to 88,900
Nickel, copper alloy (Monel)	None or cadmium plate or aluminum coating	79,700 to 83,200

TABLE I. Rivet configuration.

A Dia	B Dia	C	Dia dash number
.125	.250	.054	-04
.156	.312	.067	-05
.187	.375	.080	-06

TABLE II. NAS1919 Dash numbers.

NAS1919*04 (.125 DIA)				NAS1919*05 (.156 DIA)				NAS1919*06 (.190 DIA)				
Grip range		L Length ref	F Max	Grip range		L Length ref	F Max	Grip range		L Length ref	F Max	Grip dash no.
Min	Max			Min	Max			Min	Max			
.020	.035	.171	.298	.025	.043	.193	.356	-	-	-	-	.5
.025	.062	.198	.338	.031	.062	.227	.378	.037	.062	.251	.431	01
.063	.125	.260	.443	.063	.125	.263	.478	.063	.125	.287	.526	02
.126	.187	.323	.568	.126	.187	.326	.602	.126	.187	.350	.651	03
.188	.250	.385	.693	.188	.250	.388	.727	.188	.250	.412	.776	04
.251	.312	.448	.818	.251	.312	.451	.852	.251	.312	.475	.901	05
.313	.375	.510	.943	.313	.375	.513	.977	.313	.375	.537	1.026	06
-	-	-	-	.376	.437	.576	1.102	.376	.437	.600	1.151	07
-	-	-	-	.438	.500	.638	1.227	.438	.500	.662	1.276	08
-	-	-	-	.501	.562	.701	1.352	.501	.562	.725	1.401	09
-	-	-	-	.563	.625	.763	1.477	.563	.625	.787	1.526	10
-	-	-	-	-	-	-	-	.626	.687	.850	1.651	11
-	-	-	-	-	-	-	-	.688	.750	.912	1.776	12

THIS DOCUMENT PROVIDED BY ABBOTT AEROSPACE
Downloaded from http://www.everyspec.com
TECHNICAL LIBRARY
ABBOTTAEROSPACE.COM

THIS DOCUMENT PROVIDED BY THE ABBOTT AEROSPACE
Downloaded from http://www.everyspec.com
TECHNICAL LIBRARY
ABBOTTAEROSPACE.COM

SECTION 611

RIVET, BLIND, HIGH STRENGTH, PULL TYPE, POSITIVE MECHANICAL LOCK, 100° FLUSH HEAD, ALLOY STEEL 112KSI Fsu

APPLICABLE DOCUMENT: MS90353

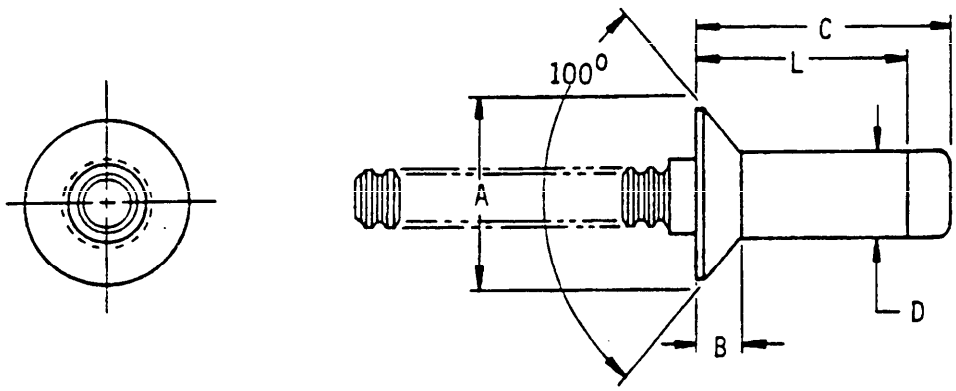

Material	Protective finish	Shear strength (psi) min
Alloy steel	Cadmium plate	112,000

TABLE I. Rivet configuration.

D Nom	A Dia	B
.156	.272 .250	.070 .062
.188	.332 .305	.135 .125
.250	.432 .400	.140 .130
.312	.522 .480	.141 .131
.375	.627 .580	.205 .195

TABLE II. MS90353 Dash numbers.

.156 dia					.188 dia					.250 dia				
Grip range		C Max	L Ref	Grip dash no.	Grip range		C Max	L Ref	Grip dash no.	Grip range		C Max	L Ref	Grip dash no.
Min	Max				Min	Max				Min	Max			
.094	.157	.404	.280	-0502	.094	.157	.475	.329	-0602	———	———	———	———	———
.156	.220	.466	.342	-0503	.156	.220	.511	.365	-0603	.156	.220	.586	.406	-0803
.219	.282	.529	.405	-0504	.219	.282	.574	.428	-0604	.219	.282	.648	.469	-0804
.281	.345	.592	.467	-0505	.281	.345	.636	.490	-0605	.281	.345	.710	.531	-0805
.344	.407	.654	.530	-0506	.344	.407	.699	.553	-0606	.344	.407	.773	.594	-0806
.406	.470	.716	.592	-0507	.406	.470	.761	.615	-0607	.406	.470	.836	.656	-0807
.469	.532	.779	.655	-0508	.469	.532	.824	.678	-0608	.469	.532	.898	.719	-0808
.531	.595	.842	.717	-0509	.531	.595	.886	.740	-0609	.531	.595	.960	.781	-0809
.594	.657	.904	.780	-0510	.594	.657	.949	.803	-0610	.594	.657	1.023	.844	-0810
.656	.720	.966	.842	-0511	.656	.720	1.011	.865	-0611	.656	.720	1.086	.906	-0811
.719	.782	1.029	.905	-0512	.719	.782	1.074	.928	-0612	.719	.782	1.148	.969	-0812
.781	.845	1.092	.967	-0513	.781	.845	1.136	.990	-0613	.781	.845	1.210	1.031	-0813
.844	.907	1.154	1.030	-0514	.844	.907	1.199	1.053	-0614	.844	.907	1.273	1.094	-0814
.906	.970	1.216	1.092	-0515	.906	.970	1.261	1.115	-0615	.906	.970	1.336	1.156	-0815
.969	1.032	1.279	1.155	-0516	.969	1.032	1.324	1.178	-0616	.969	1.032	1.398	1.219	-0816
					1.031	1.095	1.386	1.240	-0617	1.031	1.095	1.460	1.281	-0817
					1.094	1.157	1.449	1.303	-0618	1.094	1.157	1.523	1.344	-0818
					1.156	1.220	1.511	1.365	-0619	1.156	1.220	1.586	1.406	-0819
					1.219	1.282	1.574	1.428	-0620	1.219	1.282	1.648	1.469	-0820
					1.281	1.345	1.636	1.490	-0621	1.281	1.345	1.710	1.531	-0821
					1.344	1.407	1.699	1.553	-0622	1.344	1.407	1.773	1.594	-0822
					1.406	1.470	1.761	1.615	-0623	1.406	1.470	1.836	1.656	-0823
					1.469	1.532	1.824	1.678	-0624	1.469	1.532	1.898	1.719	-0824
					1.531	1.595	1.886	1.740	-0625	1.531	1.595	1.960	1.781	-0825
					1.594	1.657	1.949	1.803	-0626	1.594	1.657	2.023	1.844	-0826
					1.656	1.720	2.011	1.865	-0627	1.656	1.720	2.086	1.906	-0827
					1.719	1.782	2.074	1.928	-0628	1.719	1.782	2.148	1.969	-0828
										1.781	1.845	2.210	2.031	-0829
										1.844	1.907	2.273	2.094	-0830

THIS DOCUMENT WAS DOWNLOADED FROM THE ABBOTT AEROSPACE TECHNICAL LIBRARY
ABBOTTAEROSPACE.COM

THIS DOCUMENT PROVIDED BY THE ABBOTT AEROSPACE
Downloaded from http://www.everyspec.com
TECHNICAL LIBRARY
ABBOTTAEROSPACE.COM

TABLE II. MS90353 Dash numbers. - Continued

.312 Dia					.375 Dia				
Grip range		C	L	Grip dash	Grip range		C	L	Grip dash
Min	Max	Max	Ref	no.	Min	Max	Max	Ref	no.
.219	.282	.713	.506	-1004	.219	.282	.790	.548	-1204
.281	.345	.775	.568	-1005	.281	.345	.853	.610	-1205
.344	.407	.838	.631	-1006	.344	.407	.915	.673	-1206
.406	.470	.900	.693	-1007	.406	.470	.977	.735	-1207
.469	.532	.963	.756	-1008	.469	.532	1.040	.798	-1208
.531	.595	1.025	.818	-1009	.531	.595	1.103	.860	-1209
.594	.657	1.088	.881	-1010	.594	.657	1.165	.923	-1210
.656	.720	1.150	.943	-1011	.656	.720	1.227	.985	-1211
.719	.782	1.213	1.006	-1012	.719	.782	1.290	1.048	-1212
.781	.845	1.275	1.068	-1013	.781	.845	1.353	1.110	-1213
.844	.907	1.338	1.131	-1014	.844	.907	1.415	1.173	-1214
.906	.970	1.400	1.193	-1015	.906	.970	1.477	1.235	-1215
.969	1.032	1.463	1.256	-1016	.969	1.032	1.540	1.298	-1216
1.031	1.095	1.525	1.318	-1017	1.031	1.095	1.603	1.360	-1217
1.094	1.157	1.588	1.381	-1018	1.094	1.157	1.665	1.423	-1218
1.156	1.220	1.650	1.443	-1019	1.156	1.220	1.727	1.485	-1219
1.219	1.282	1.713	1.506	-1020	1.219	1.282	1.790	1.548	-1220
1.281	1.345	1.775	1.568	-1021	1.281	1.345	1.853	1.610	-1221
1.344	1.407	1.838	1.631	-1022	1.344	1.407	1.915	1.673	-1222
1.406	1.470	1.900	1.693	-1023	1.406	1.470	1.977	1.735	-1223
1.469	1.532	1.963	1.756	-1024	1.469	1.532	2.040	1.798	-1224
1.531	1.595	2.025	1.818	-1025	1.531	1.595	2.103	1.860	-1225
1.594	1.657	2.088	1.881	-1026	1.594	1.657	2.165	1.923	-1226
1.656	1.720	2.150	1.943	-1027	1.656	1.720	2.227	1.985	-1227
1.719	1.782	2.213	2.006	-1028	1.719	1.782	2.290	2.048	-1228
1.781	1.845	2.275	2.068	-1029	1.781	1.845	2.353	2.110	-1229
1.844	1.907	2.338	2.131	-1030	1.844	1.907	2.415	2.173	-1230
1.906	1.970	2.400	2.193	-1031	1.906	1.970	2.477	2.235	-1231
1.969	2.032	2.463	3.256	-1032	1.969	2.032	2.540	2.298	-1232
					2.031	2.095	2.603	2.360	-1233
					2.094	2.157	2.665	2.423	-1234
					2.156	2.220	2.727	2.485	-1235
					2.219	2.282	2.790	2.548	-1236

THIS DOCUMENT PROVIDED BY THE ABBOTT AEROSPACE
TECHNICAL LIBRARY
ABBOTTAEROSPACE.COM
Downloaded from http://www.everyspec.com

THIS DOCUMENT PROVIDED BY THE ABBOTT AEROSPACE
Downloaded from http://www.everyspec.com
TECHNICAL LIBRARY
ABBOTTAEROSPACE.COM

SECTION 612

RIVET, BLIND, HIGH STRENGTH, PULL TYPE, POSITIVE MECHANICAL LOCK, PROTRUDING HEAD, ALLOY STEEL 112KSI Fsu

APPLICABLE DOCUMENT: MS90354

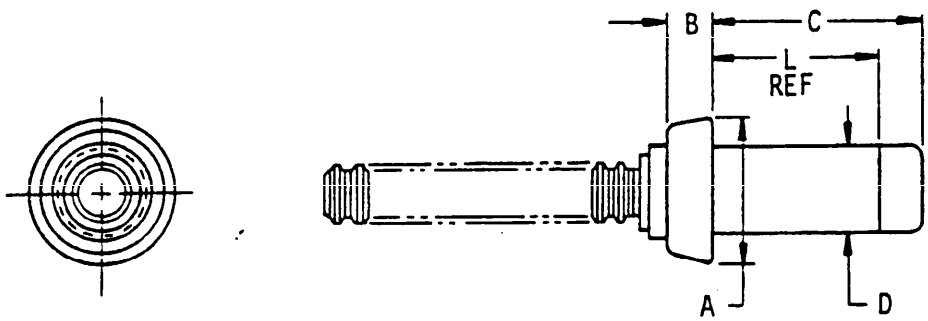

Material	Protective finish	Shear strength (psi) min
Alloy steel	Cadmium plate	112,000

TABLE I. Rivet configuration.

D Nom	A Dia	B
.156	.272 .250	.070 .062
.188	.332 .305	.135 .125
.250	.432 .400	.140 .130
.312	.522 .480	.141 .131
.375	.627 .580	.205 .195

THIS DOCUMENT PROVIDED BY THE ABBOTT AEROSPACE
Downloaded from http://www.everyspec.com
TECHNICAL LIBRARY
ABBOTTAEROSPACE.COM

TABLE II. MS90354 Dash numbers.

.156 Dia					.188 Dia					.250 Dia				
Grip range		C max	L Ref	Grip dash no.	Grip range		C max	L Ref	Grip dash no.	Grip range		C max	L Ref	Grip dash no.
Min	Max				Min	Max				Min	Max			
.031	.095	.342	.217	-0501	----	----	----	----	----	----	----	----	----	----
.094	.157	.404	.280	-0502	.094	.157	.449	.303	-0602	.094	.157	.523	.344	-0802
.156	.220	.466	.342	-0503	.156	.220	.511	.365	-0603	.156	.220	.586	.406	-0803
.219	.282	.529	.405	-0504	.219	.282	.574	.428	-0604	.219	.282	.648	.469	-0804
.281	.345	.592	.467	-0505	.281	.345	.636	.490	-0605	.281	.345	.710	.531	-0805
.344	.407	.654	.530	-0506	.344	.407	.699	.553	-0606	.344	.407	.773	.594	-0806
.406	.470	.716	.592	-0507	.406	.470	.761	.615	-0607	.406	.470	.836	.656	-0807
.469	.532	.779	.655	-0508	.469	.532	.824	.678	-0608	.469	.532	.898	.719	-0808
.531	.595	.842	.717	-0509	.531	.595	.886	.740	-0609	.531	.595	.960	.781	-0809
.594	.657	.904	.780	-0510	.594	.657	.949	.803	-0610	.594	.657	1.023	.844	-0810
.656	.720	.966	.842	-0511	.656	.720	1.011	.865	-0611	.656	.720	1.086	.906	-0811
.719	.782	1.029	.905	-0512	.719	.782	1.074	.928	-0612	.719	.782	1.148	.969	-0812
.781	.845	1.092	.967	-0513	.781	.845	1.136	.990	-0613	.781	.845	1.210	1.031	-0813
.844	.907	1.154	1.030	-0514	.844	.907	1.199	1.053	-0614	.844	.907	1.273	1.094	-0814
.906	.970	1.216	1.092	-0515	.906	.970	1.261	1.115	-0615	.906	.970	1.336	1.156	-0815
.969	1.032	1.279	1.155	-0516	.969	1.032	1.324	1.178	-0616	.969	1.032	1.398	1.219	-0816
					1.031	1.095	1.386	1.240	-0617	1.031	1.095	1.460	1.281	-0817
					1.094	1.157	1.449	1.303	-0618	1.094	1.157	1.523	1.344	-0818
					1.156	1.220	1.511	1.365	-0619	1.156	1.220	1.586	1.406	-0819
					1.219	1.282	1.574	1.428	-0620	1.219	1.282	1.648	1.469	-0820
					1.281	1.345	1.636	1.490	-0621	1.281	1.345	1.710	1.531	-0821
					1.344	1.407	1.699	1.553	-0622	1.344	1.407	1.773	1.594	-0822
					1.406	1.470	1.761	1.615	-0623	1.406	1.470	1.836	1.656	-0823
					1.469	1.532	1.824	1.678	-0624	1.469	1.532	1.898	1.719	-0824

THIS DOCUMENT PROVIDED BY THE ABBOTT AEROSPACE
Downloaded from http://www.everyspec.com
TECHNICAL LIBRARY
ABBOTTAEROSPACE.COM

SECTION 613

RIVET, BLIND, NONSTRUCTURAL, 100° FLUSH HEAD, CLASS 2

APPLICABLE DOCUMENT: MS20605

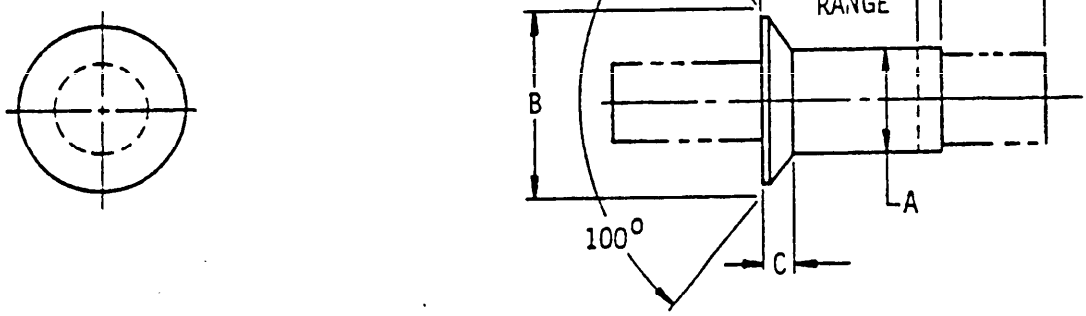

Material		Protective finish	Shear strength (psi) min
Aluminum alloy	2117	Anodize	26,000
	5056		24,000
Nickel copper alloy (monel)		WWM Carbo-wax or dry film lube	49,000

TABLE I. Rivet configuration.

A Dia	B Ref	C
.094	.179	.036
.125	.225	.042
.156	.286	.055
.187	.353	.070
.250	.476	.095

THIS DOCUMENT PROVIDED BY THE ABBOTT AEROSPACE
TECHNICAL LIBRARY
ABBOTTAEROSPACE.COM
Downloaded from http://www.everyspec.com

TABLE II. Aluminum alloy 2117.

.094 Diameter, nominal

Grip range		L Length max	F Max	Mandrel loaded	Plain stem	Serrated stem
Min	Max			Dash no.	Dash no.	Dash no.
.040	.062	.140	.281	AD3C1	AD3T1	AD3W1
.063	.125	.203	.281	AD3C2	AD3T2	AD3W2
.126	.187	.265	.343	AD3C3	AD3T3	AD3W3
.188	.250	.328	.405	AD3C4	AD3T4	AD3W4

.125 Diameter, nominal

Grip range		L Length max	F Max	Mandrel loaded	Plain stem	Serrated stem
Min	Max			Dash no.	Dash no.	Dash no.
.047	.062	.170	.256	AD4C1	AD4T1	AD4W1
.063	.125	.232	.318	AD4C2	AD4T2	AD4W2
.126	.187	.295	.381	AD4C3	AD4T3	AD4W3
.188	.250	.357	.443	AD4C4	AD4T4	AD4W4
.251	.312	.420	.506	AD4C5	AD4T5	AD4W5
.313	.375	.482	.568	AD4C6	AD4T6	AD4W6
.376	.437	.544	.630	AD4C7	AD4T7	AD4W7
.438	.500	.607	.693	AD4C8	AD4T8	AD4W8

.156 Diameter, nominal

Grip range		L Length max	F Max	Mandrel loaded	Plain stem	Serrated stem
Min	Max			Dash no.	Dash no.	Dash no.
.062	.125	.274	.44	AD5C2	AD5T2	AD5W2
.126	.250	.399	.56	AD5C4	AD5T4	AD5W4
.251	.375	.524	.69	AD5C6	AD5T6	AD5W6
.376	.500	.679	.81	AD5C8	AD5T8	AD5W8

.187 Diameter, nominal

Grip range		L Length max	F Max	Mandrel loaded	Plain stem	Serrated stem
Min	Max			Dash no.	Dash no.	Dash no.
.078	.128	.301	.48	AD6C2	AD6T2	AD6W2
.126	.250	.426	.60	AD6C4	AD6T4	AD6W4
.251	.375	.551	.72	AD6C6	AD6T6	AD6W6
.376	.500	.706	.84	AD6C8	AD6T8	AD6W8
.501	.625	.801	.97	AD6C10	AD6T10	AD6W10
.626	.750	.926	1.10	AD6C12	AD6T12	AD6W12
.751	.875	1.051	1.22	AD6C14	AD6T14	AD6W14

.250 Diameter, nominal

Grip range		L Length max	F Max	Mandrel loaded	Plain stem	Serrated stem
Min	Max			Dash no.	Dash no.	Dash no.
.126	.250	.447	.65	AD8C4	AD8T4	AD8W4
.251	.375	.572	.77	AD8C6	AD8T6	AD8W6
.376	.500	.697	.89	AD8C8	AD8T8	AD8W8
.501	.625	.822	1.02	AD8C10	AD8T10	AD8W10
.626	.750	.947	1.15	AD8C12	AD8T12	AD8W12
.751	.875	1.072	1.27	AD8C14	AD8T14	AD8W14
.876	1.000	1.195	1.40	AD8C16	AD8T16	AD8W16

THIS DOCUMENT PROVIDED BY THE ABBOTT AEROSPACE
Downloaded from http://www.everyspec.com
TECHNICAL LIBRARY
ABBOTTAEROSPACE.COM

TABLE III. Aluminum alloy 5056.

.094 Diameter, nominal

Grip range		L Length max	F Max	Mandrel loaded	Plain stem	Serrated stem
Min	Max			Dash no.	Dash no.	Dash no.
.040	.062	.140	.281	-	B3T1	B3W1
.063	.125	.203	.281	-	B3T2	B3W2
.126	.187	.265	.343	-	B3T3	B3W3
.188	.250	.328	.405	-	B3T4	B3W4

.125 Diameter, nominal

Grip range		L Length max	F Max	Mandrel loaded	Plain stem	Serrated stem
Min	Max			Dash no.	Dash no.	Dash no.
.047	.062	.170	.256	-	B4T1	B4W1
.063	.125	.232	.338	-	B4T2	B4W2
.126	.187	.295	.381	-	B4T3	B4W3
.188	.250	.357	.443	-	B4T4	B4W4
.251	.312	.420	.506	-	B4T5	B4W5
.313	.375	.482	.568	-	B4T6	B4W6
.376	.437	.544	.630	-	B4T7	B4W7
.438	.500	.607	.693	-	B4T8	B4W8

.156 Diameter, nominal

Grip range		L Length max	F Max	Mandrel loaded	Plain stem	Serrated stem
Min	Max			Dash no.	Dash no.	Dash no.
.062	.125	.274	.44	-	B5T2	B5W2
.126	.250	.399	.56	-	B5T4	B5W4
.251	.375	.524	.69	-	B5T6	B5W6
.376	.500	.679	.81	-	B5T8	B5W8

.187 Diameter, nominal

Grip range		L Length max	F Max	Mandrel loaded	Plain stem	Serrated stem
Min	Max			Dash no.	Dash no.	Dash no.
.078	.128	.301	.48	-	B6T2	B6W2
.126	.250	.426	.60	-	B6T4	B6W4
.251	.375	.551	.72	-	B6T6	B6W6
.376	.500	.706	.84	-	B6T8	B6W8
.501	.625	.801	.97	-	B6T10	B6W10
.626	.750	.926	1.10	-	B6T12	B6W12
.751	.875	1.051	1.22	-	B6T14	B6W14

.250 Diameter, nominal

Grip range		L Length max	F Max	Mandrel loaded	Plain stem	Serrated stem
Min	Max			Dash no.	Dash no.	Dash no.
.126	.250	.447	.65	-	B8T4	B8W4
.251	.375	.572	.77	-	B8T6	B8W6
.376	.500	.697	.89	-	B8T8	B8W8
.501	.625	.822	1.02	-	B8T10	B8W10
.626	.750	.947	1.15	-	B8T12	B8W12
.751	.875	1.072	1.27	-	B8T14	B8W14
.876	1.000	1.195	1.40	-	B8T16	B8W16

THIS DOCUMENT PROVIDED BY THE ABBOTT AEROSPACE
Downloaded from http://www.everyspec.com
TECHNICAL LIBRARY
ABBOTTAEROSPACE.COM

TABLE IV. Nickel copper alloy (Monel).

.094 Diameter, nominal

Grip range		L Length max	F Max	Mandrel loaded	Plain stem	Serrated stem
Min	Max			Dash no.	Dash no.	Dash no.
.040	.062	.140	.281	M3C1	M3T1	M3W1
.063	.125	.203	.281	M3C2	M3T2	M3W2
.126	.187	.265	.348	M3C3	M3T3	M3W3
.188	.250	.328	.405	M3C4	M3T4	M3W4

.125 Diameter, nominal

Grip range		L Length max	F Max	Mandrel loaded	Plain stem	Serrated stem
Min	Max			Dash no.	Dash no.	Dash no.
.047	.062	.170	.256	M4C1	M4T1	M4W1
.063	.125	.232	.318	M4C2	M4T2	M4W2
.126	.187	.295	.381	M4C3	M4T3	M4W3
.186	.250	.357	.443	M4C4	M4T4	M4W4
.251	.312	.420	.506	M4C5	M4T5	M4W5
.313	.375	.482	.568	M4C6	M4T6	M4W6
.376	.437	.544	.630	M4C7	M4T7	M4W7
.438	.500	.607	.693	M4C8	M4T8	M4W8

.156 Diameter, nominal

Grip range		L Length max	F Max	Mandrel loaded	Plain stem	Serrated stem
Min	Max			Dash no.	Dash no.	Dash no.
.062	.125	.274	.44	M5C2	M5T2	M5W2
.126	.250	.399	.56	M5C4	M5T4	M5W4
.251	.375	.524	.69	M5C6	M5T6	M5W6
.376	.500	.679	.81	M5C8	M5T8	M5W8

.187 Diameter, nominal

Grip range		L Length max	F Max	Mandrel loaded	Plain stem	Serrated stem
Min	Max			Dash no.	Dash no.	Dash no.
.078	.128	.301	.48	M6C2	M6T2	M6W2
.126	.250	.426	.60	M6C4	M6T4	M6W4
.251	.375	.551	.72	M6C6	M6T6	M6W6
.376	.500	.706	.84	M6C8	M6T8	M6W8
.501	.625	.801	.97	M6C10	M6T10	M6W10
.626	.750	.926	1.10	M6C12	M6T12	M6W12
.751	.875	1.051	1.22	M6C14	M6T14	M6W14

.250 Diameter, nominal

Grip range		L Length max	F Max	Mandrel loaded	Plain stem	Serrated stem
Min	Max			Dash no.	Dash no.	Dash no.
.126	.250	.447	.65	M8C4	M8T4	M8W4
.251	.375	.572	.77	M8C6	M8T6	M8W6
.376	.500	.697	.89	M8C8	M8T8	M8W8
.501	.625	.822	1.02	M8C10	M8T10	M8W10
.626	.750	.947	1.15	M8C12	M8T12	M8W12
.751	.875	1.072	1.27	M8C14	M8T14	M8W14
.876	1.000	1.195	1.40	M8C16	M8T16	M8W16

THIS DOCUMENT PROVIDED BY THE ABBOTT AEROSPACE
Downloaded from http://www.everyspec.com
TECHNICAL LIBRARY
ABBOTTAEROSPACE.COM

SECTION 614

RIVETS, BLIND, NONSTRUCTURAL, RETAINED MANDREL; CLOSED-END, 120° COUNTERSUNK HEAD; ALUMINUM ALLOY

APPLICABLE DOCUMENT: MIL-R-24243/7

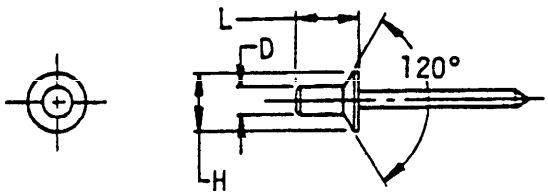

HOLLOW CORE

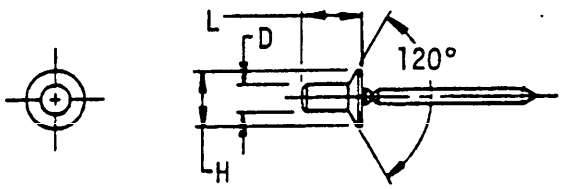

FILLED CORE

Material	Protective finish	Shear strength (psi) min	
		Hollow	Filled
Aluminum alloy 5056	Anodize or chemical surface treatment	16,000	28,000

TABLE I. Rivet configuration.

D Nom dia	H
.125	.243 .229
.156	.322 .302
.188	.387 .363

THIS DOCUMENT PROVIDED BY THE ABBOTT AEROSPACE
Downloaded from http://www.everyspec.com
TECHNICAL LIBRARY
ABBOTTAEROSPACE.COM

TABLE II. M24243/7 Dash numbers.

L		Grip range		Dash number	
				Aluminum alloy 5056	
Min	Max	Min	Max	Hollow Core	Filled Core
.252	.282	.040	.062	A401H	A401F
.317	.347	.063	.125	A402H	A402F
.379	.409	.126	.187	A403H	A403F
.442	.472	.188	.250	A404H	-
.504	.534	.251	.312	A405H	-
.347	.377	.040	.125	A502H	A502F
.409	.439	.126	.187	A503H	A503F
.534	.564	.251	.312	A505H	A505F
.371	.401	.063	.125	A602H	A602F
.496	.526	.126	.250	A604H	A604F
.621	.651	.251	.375	A606H	A606F

THIS DOCUMENT PROVIDED BY THE ABBOTT AEROSPACE
Downloaded from http://www.everyspec.com
TECHNICAL LIBRARY
ABBOTTAEROSPACE.COM

SECTION 615

RIVETS, BLIND, NONSTRUCTURAL, RETAINED MANDREL; CLOSED-END, DOMED HEAD; ALUMINUM ALLOY

APPLICABLE DOCUMENT: MIL-R-24243/6

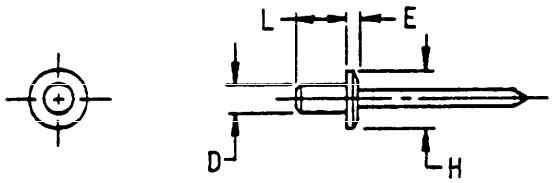

HOLLOW CORE

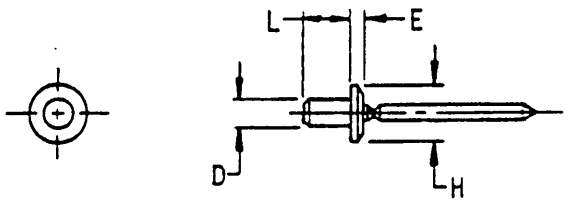

FILLED CORE

Material		Protective finish	Shear strength (psi) min	
			Hollow	Filled
Aluminum alloy	5056	Anodize or chemical surface treatment	16,000	28,000
	1100		6,000	Not Specified

TABLE I. Rivet configuration.

D Nom dia	H	E
.125	.248 .224	.046 .026
.156	.328 .296	.061 .041
.188	.394 .356	.076 .056

THIS DOCUMENT PROVIDED BY THE ABBOTT AEROSPACE
TECHNICAL LIBRARY
ABBOTTAEROSPACE.COM
Downloaded from http://www.everyspec.com

TABLE II. M24243/6 Dash numbers.

L		Grip range		Dash number		
				Aluminum alloy		
				5056	1100	5056
Min	Max	Min	Max	Hollow core		Filled core
.222	.252	.040	.062	A401H	-	A401F
.285	.315	.063	.125	A402H	C402H	A402F
.347	.377	.126	.187	A403H	-	A403F
.410	.440	.188	.250	A404H	C404H	-
.472	.502	.251	.312	A405H	-	-
.300	.330	.050	.125	A502H	-	A502F
.362	.392	.126	.187	A503H	-	A503F
-	-	.188	.250	-	C504H	-
.487	.517	.251	.312	A505H	-	A505F
.315	.345	.063	.125	A602H	C602H	A602F
.440	.470	.126	.250	A604H	C604H	A604F
.565	.595	.251	.375	A606H	C606H	A606F
.690	.720	.376	.500	A608H	-	-

THIS DOCUMENT PROVIDED BY THE ABBOTT AEROSPACE
Downloaded from http://www.everyspec.com
TECHNICAL LIBRARY
ABBOTTAEROSPACE.COM

SECTION 616

RIVETS, BLIND, NONSTRUCTURAL, RETAINED MANDREL; OPEN END, 100° COUNTERSUNK HEAD;

APPLICABLE DOCUMENT: MIL-R-24243/4

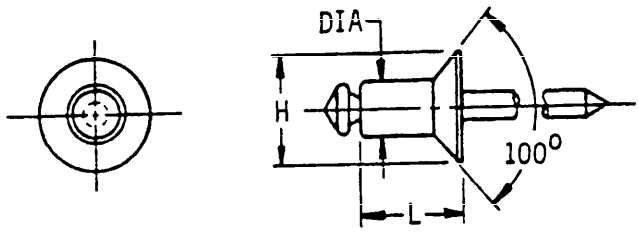

Material	Protective finish	Shear strength (psi) min
Aluminum alloy 5052 or 5056	Anodize or chemical surface treatment	16,000

TABLE I. Rivet configuration.

Nom dia	H
.125	.227 .213

TABLE II. M24243/4 Dash numbers.

L		Grip range		Dash number	
				Aluminum alloy	
Min	Max	Min	Max	5056	5052
.222	.252	.063	.125	A402	B402
.284	.314	.126	.187	A403	-

THIS DOCUMENT PROVIDED BY THE ABBOTT AEROSPACE
Downloaded from http://www.everyspec.com
TECHNICAL LIBRARY
ABBOTTAEROSPACE.COM

THIS DOCUMENT PROVIDED BY THE ABBOTT AEROSPACE
Downloaded from http://www.everyspec.com
TECHNICAL LIBRARY
ABBOTTAEROSPACE.COM

SECTION 617

RIVETS, BLIND, NONSTRUCTURAL, RETAINED MANDREL; OPEN-END, 120° COUNTERSUNK HEAD; ALUMINUM ALLOY

APPLICABLE DOCUMENT: MIL-R-24243/9

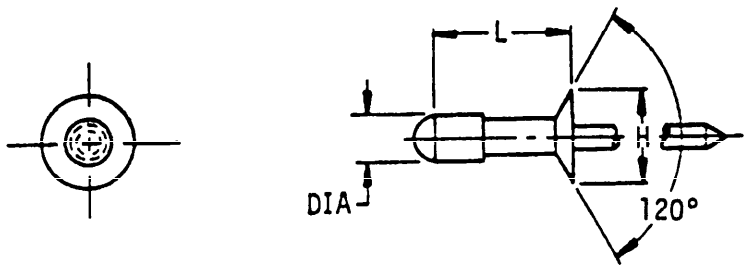

Material	Protective finish	Shear strength (psi) min
Aluminum alloy 5052	Anodize or chemical surface treatment	16,000

TABLE I. Rivet configuration.

Nom dia	H
.125	.205
.156	.245
.188	.339

TABLE II. M24243/9 Dash numbers.

L	Grip range		Dash number
	Min	Max	Aluminum alloy 5052
.375	.000	.280	A412
.438	.000	.312	A514
.469	.000	.375	A615
.656	.000	.625	A621

THIS DOCUMENT PROVIDED BY THE ABBOTT AEROSPACE
TECHNICAL LIBRARY
ABBOTTAEROSPACE.COM
Downloaded from http://www.everyspec.com

THIS DOCUMENT PROVIDED BY ABBOTT AEROSPACE
Downloaded from http://www.everyspec.com
TECHNICAL LIBRARY
ABBOTTAEROSPACE.COM

SECTION 618

RIVETS, BLIND, NONSTRUCTURAL, RETAINED MANDREL; OPEN END, 120° COUNTERSUNK HEAD; ALLUMINUM ALLOY, CARBON STEEL, NICKEL-COPPER ALLOY

APPLICABLE DOCUMENT: MIL-R-24243/5

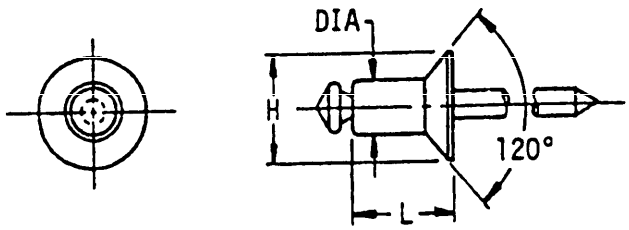

Material	Protective finish	Shear strength (psi) min
Aluminum alloy 5052 or 5056	Anodize or chemical surface treatment	16,000
Steel C-1006 thru C-1010	Zinc plate or cadmium plate or phosphate coat	23,000
Nickel copper alloy (Monel)	Zinc coat	29,000

TABLE I. Rivet configuration.

Nom dia	H
.125	.243 .229
.156	.270 .256
.188	.385 .310

THIS DOCUMENT PROVIDED BY THE ABBOTT AEROSPACE
Downloaded from http://www.everyspec.com
TECHNICAL LIBRARY
ABBOTTAEROSPACE.COM

TABLE II. M24243/5 Dash numbers.

L		Grip range		Dash number			
Min	Max	Min	Max	Aluminum alloy		Steel C-1006 C-1010	Nickel copper alloy (Monel)
				5056	5052		
.231	.253	.040	.062	A401	-	-	E401
.253	.295	.063	.125	A402	B402	D402	E402
.313	.343	.126	.187	A403	B403	D403	E403
.373	.403	.188	.250	A404	B404	D404	E404
.423	.453	.251	.312	A405	-	-	E405
.216	.286	.040	.125	A502	-	-	E502
.316	.356	.126	.187	A503	-	-	E503
.396	.426	.188	.250	A504	-	-	E504
.536	.566	.251	.375	A506	-	-	-
.269	.330	.063	.125	A602	-	-	E602
.419	.480	.126	.250	A604	-	-	E604
.529	.650	.251	.375	A606	-	-	E606
.679	.730	.376	.500	-	-	-	E608
.779	.809	.501	.625	-	-	-	E610

THIS DOCUMENT PROVIDED BY THE ABBOTT AEROSPACE
TECHNICAL LIBRARY
ABBOTTAEROSPACE.COM
Downloaded from http://www.everyspec.com

SECTION 619

RIVETS, BLIND, NONSTRUCTURAL, RETAINED MANDREL; OPEN END, DOMED HEAD; ALUMINUM ALLOY

APPLICABLE DOCUMENT: MIL-R-24243/10

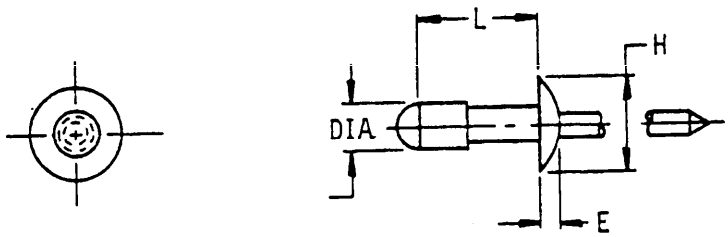

Material	Protective finish	Shear strength (psi) min
Aluminum alloy 5052	Anodize or chemical surface treatment	16,000

TABLE I. Rivet configuration.

Nom dia	H	E
.125	.238 .262	.030 .040
.156	.296 .328	.037 .047
.188	.356 .394	.045 .055

TABLE II. M24243/10 Dash numbers.

L	Grip range		Dash number
	Min	Max	Aluminum alloy 5052
.375 .438 .469 .656	.000 .000 .000 .000	.280 .312 .375 .625	A412 A514 A615 A621

THIS DOCUMENT PROVIDED BY THE ABBOTT AEROSPACE
TECHNICAL LIBRARY
ABBOTTAEROSPACE.COM
Downloaded from http://www.everyspec.com

THIS DOCUMENT PROVIDED BY THE ABBOTT AEROSPACE
Downloaded from http://www.everyspec.com
TECHNICAL LIBRARY
ABBOTTAEROSPACE.COM

SECTION 620

RIVETS, BLIND, NONSTRUCTURAL, RETAINED MANDREL; OPEN-END, 3D DOMED HEAD; ALUMINUM ALLOY, CARBON STEEL

APPLICABLE DOCUMENT: MIL-R-24243/3

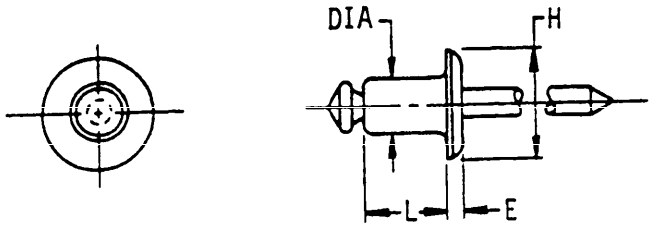

Material	Protective finish	Shear strength (psi) min
Aluminum alloy 5052 or 5056	Anodize or chemical surface treatment	16,000
Steel C-1006 thru C-1010	Zinc plate or cadmium plate or phosphate coat	23,000

TABLE I. Rivet configuration.

Nom dia	H	E
.125	.390 .360	.043 .035
.188	.650 .600	.082 .062

TABLE II. M24243/3 Dash numbers.

L		Grip range		Dash number		
				Aluminum alloy		Steel C-1006 C-1010
Min	Max	Min	Max	5056	5052	
.222	.252	.040	.125	A402	B402	D402
.347	.377	.126	.250	A404	B404	D404
.517	.547	.250	.375	A606	B606	D606
.642	.676	.376	.500	A608	B608	D608
.767	.797	.501	.625	A610	-	D610
.892	.922	.626	.750	A612	-	D612

THIS DOCUMENT PROVIDED BY THE ABBOTT AEROSPACE
TECHNICAL LIBRARY
ABBOTTAEROSPACE.COM
Downloaded from http://www.everyspec.com

THIS DOCUMENT PROVIDED BY THE ABBOTT AEROSPACE
Downloaded from http://www.everyspec.com
TECHNICAL LIBRARY
ABBOTTAEROSPACE.COM

SECTION 621

RIVETS, BLIND, NONSTRUCTURAL, RETAINED MANDREL; OPEN-END, DOMED HEAD; ALUMINUM ALLOY, CARBON STEEL, CORROSION RESISTANT STEEL

APPLICABLE DOCUMENT: MIL-R-24243/1

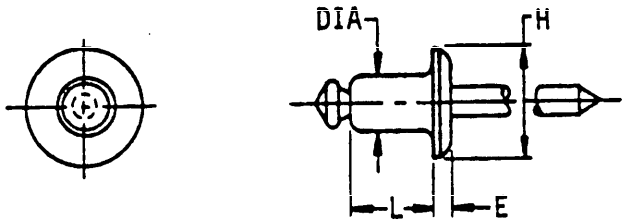

Material	Protective finish	Shear strength (psi) min
Aluminum alloy 5056	Anodize or chemical surface treatment	16,000
Aluminum alloy 5052		11,000
Steel C-1006 thru C-1010	Zinc plate or cadmium plate or phosphate coat	23,000
Cres 305	Passivate	38,000

TABLE I. Rivet configuration.

Nom dia	H	E
.094	.198 .178	.032 .022
.125	.262 .238	.040 .030
.156	.328 .296	.047 .037
.188	.394 .356	.055 .045

THIS DOCUMENT PROVIDED BY THE ABBOTT AEROSPACE
Downloaded from http://www.everyspec.com
TECHNICAL LIBRARY
ABBOTTAEROSPACE.COM

TABLE II. M24243/1 Dash numbers.

L		Grip range		Dash number				
Min	Max	Min	Max	Aluminum alloy		Steel C-1006 C-1010	Cres 305	
				5056	5052			
.202	.232	.040	.125	A302	B302	D302	-	-
.327	.357	.126	.250	A304	B304	D304	-	-
.160	.190	.040	.062	A401	B401	D401	-	-
.222	.252	.063	.125	A402	B402	D402	F402	G402
.284	.314	.126	.187	A403	B403	D403	F403	G403
.347	.377	.188	.250	A404	B404	D404	F404	G404
.409	.439	.251	.312	A405	B405	D405	-	-
.471	.501	.313	.375	A406	B406	D406	-	-
.596	.626	.376	.500	A408	B408	D408	-	-
.244	.274	.040	.125	A502	B502	D502	-	-
.306	.336	.126	.187	A503	B503	D503	-	-
.369	.399	.188	.250	A504	B504	D504	-	-
.494	.524	.251	.375	A506	B506	D506	-	-
.619	.649	.376	.500	A508	B508	D508	-	-
.267	.297	.063	.125	A602	B602	D602	F602	G602
.392	.422	.126	.250	A604	B604	D604	F604	G604
.517	.547	.251	.375	A606	B606	D606	-	-
.642	.672	.376	.500	A608	B608	D608	-	-
.767	.797	.501	.625	A610	B610	D610	-	-
.892	.922	.626	.750	A612	-	D612	-	-

THIS DOCUMENT PROVIDED BY THE ABBOTT AEROSPACE
Downloaded from http://www.everyspec.com
TECHNICAL LIBRARY
ABBOTTAEROSPACE.COM

SECTION 622

RIVETS, BLIND, NONSTRUCTURAL, RETAINED MANDREL; OPEN-END, DOMED HEAD; NICKEL-COPPER ALLOY

APPLICABLE DOCUMENT: MIL-R-24243/2

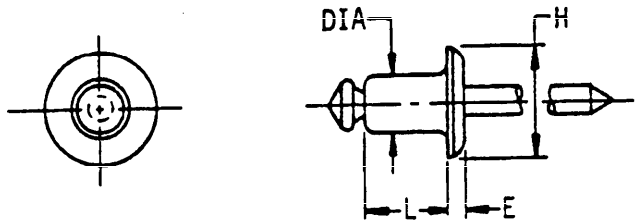

Material	Protective finish	Shear strength (psi) min
Nickel copper alloy (Monel)	Zinc plate	29,000

TABLE I. Rivet configuration.

Nom dia	H	E
.125	.248 .224	.030 .020
.156	.279 .247	.033 .023
.188	.339 .301	.050 .030
.250	.462 .392	.063 .043

TABLE II. M24243/2 dash numbers.

Nom dia	L		Grip range		Dash number
	Min.	Max	Min	Max	Nickel copper alloy (Monel)
.125	.180	.210	.040	.062	E401
	.230	.260	.063	.125	E402
	.340	.370	.126	.187	E403
	.390	.420	.188	.250	E404
.156	.290	.320	.040	.125	E502
	.360	.390	.126	.187	E503
	.390	.420	.188	.250	E504
.188	.290	.320	.063	.125	E602
	.490	.520	.126	.250	E604
	.640	.670	.251	.375	E606
	.740	.770	.376	.500	E608
.250	.490	.520	.125	.250	E804
	.690	.720	.376	.500	E808

THIS DOCUMENT PROVIDED BY THE ABBOTT AEROSPACE
TECHNICAL LIBRARY
ABBOTTAEROSPACE.COM
Downloaded from http://www.everyspec.com

THIS DOCUMENT PROVIDED BY THE ABBOTT AEROSPACE
Downloaded from http://www.everyspec.com
TECHNICAL LIBRARY
ABBOTTAEROSPACE.COM

SECTION 623

RIVETS, BLIND, NONSTRUCTURAL, RETAINED MANDREL; OPEN-END, SNAP HEAD; ALUMINUM ALLOY

APPLICABLE DOCUMENT: MIL-R-24243/8

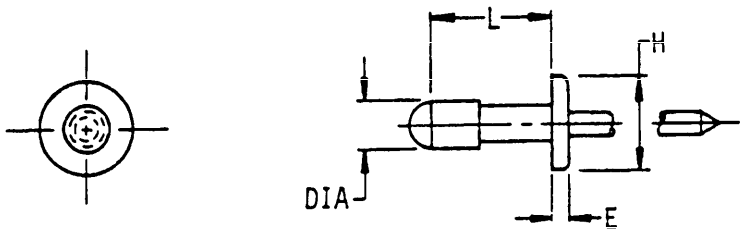

Material	Protective finish	Shear strength (psi) min
Aluminum alloy 5052	Anodize or chemical surface treatment	16,000

TABLE I. Rivet configuration.

Nom Dia	H	E
.125	.212 .218	.043 .046
.156	.252 .258	.056 .059
.188	.346 .352	.069 .072

TABLE II. M24243/8 dash numbers.

Nom dia	Grip range		L	Dash number
	Min	Max		Aluminum alloy 5052
.125	.000	.250	.312	A410
.156	.000	.280	.375	A512
.188	.000	.312	.406	A613
	.000	.500	.593	A619

THIS DOCUMENT PROVIDED BY THE ABBOTT AEROSPACE
TECHNICAL LIBRARY
ABBOTTAEROSPACE.COM
Downloaded from http://www.everyspec.com

THIS DOCUMENT PROVIDED BY THE ABBOTT AEROSPACE
Downloaded from http://www.everyspec.com
TECHNICAL LIBRARY
ABBOTTAEROSPACE.COM

SECTION 624

RIVET, BLIND, NONSTRUCTURAL, UNIVERSAL HEAD, CLASS I

APPLICABLE DOCUMENT: MS20604

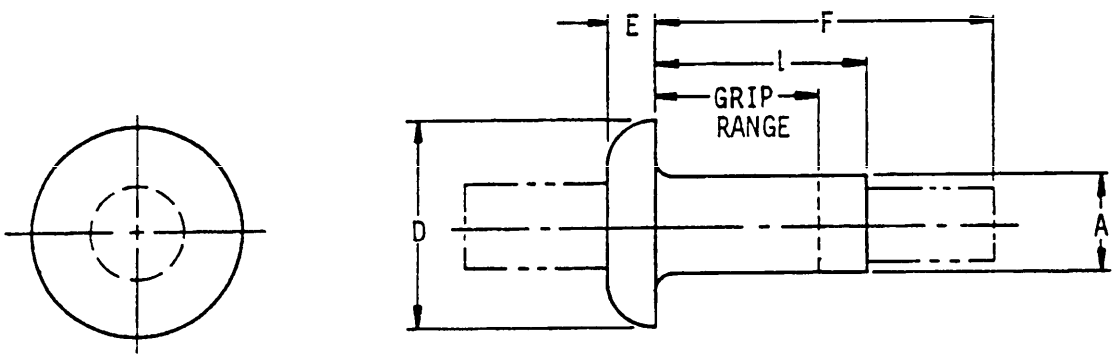

Material		Protective finish	Shear strength (psi) min
Aluminum alloy	2117	Anodize	26,000
	5056		24,000
Nickel copper alloy (Monel)		WWM Carbo-wax or dry film lube	49,000

TABLE I. Rivet configuration.

A Dia	Universal head	
	D Dia	E
.094	.187	.040
.125	.250	.054
.156	.312	.067
.187	.375	.080
.250	.500	.107

THIS DOCUMENT PROVIDED BY THE ABBOTT AEROSPACE
Downloaded from http://www.everyspec.com
TECHNICAL LIBRARY
ABBOTTAEROSPACE.COM

TABLE II. Aluminum alloy 2117.

.094 Diameter, nominal

Grip range		L Length max	F Max	Mandrel loaded	Plain stem	Serrated stem
Min	Max			Dash no.	Dash no.	Dash no.
.015	.062	.140	.281	AD3C1	AD3T1	AD3W1
.063	.125	.203	.281	AD3C2	AD3T2	AD3W2
.126	.187	.265	.343	AD3C3	AD3T3	AD3W3
.188	.250	.328	.405	AD3C4	AD3T4	AD3W4

.125 Diameter, nominal

Grip range		L Length max	F Max	Mandrel loaded	Plain stem	Serrated stem
Min	Max			Dash no.	Dash no.	Dash no.
.015	.062	.170	.256	AD4C1	AD4T1	AD4W1
.063	.125	.262	.318	AD4C2	AD4T2	AD4W2
.126	.187	.295	.382	AD4C3	AD4T3	AD4W3
.188	.250	.357	.443	AD4C4	AD4T4	AD4W4
.251	.312	.420	.506	AD4C5	AD4T5	AD4W5
.313	.375	.482	.568	AD4C6	AD4T6	AD4W6
.376	.437	.544	.630	AD4C7	AD4T7	AD4W7
.438	.500	.607	.693	AD4C8	AD4T8	AD4W8

.156 Diameter, nominal

Grip range		L Length max	F Max	Mandrel loaded	Plain stem	Serrated stem
Min	Max			Dash no.	Dash no.	Dash no.
.015	.125	.274	.44	AD5C2	AD5T2	AD5W2
.126	.250	.399	.56	AD5C4	AD5T4	AD5W4
.251	.375	.524	.69	AD5C6	AD5T6	AD5W6
.376	.500	.679	.81	AD5C8	AD5T8	AD5W8

.187 Diameter, nominal

Grip range		L Length max	F Max	Mandrel loaded	Plain stem	Serrated stem
Min	Max			Dash no.	Dash no.	Dash no.
.015	.125	.301	.48	AD6C2	AD6T2	AD6W2
.126	.250	.426	.60	AD6C4	AD6T4	AD6W4
.251	.375	.551	.72	AD6C6	AD6T6	AD6W6
.376	.500	.706	.84	AD6C8	AD6T8	AD6W8
.501	.625	.801	.97	AD6C10	AD6T10	AD6W10
.626	.750	.926	1.10	AD6C12	AD6T12	AD6W12
.751	.875	1.051	1.22	AD6C14	AD6T14	AD6W14

.250 Diameter, nominal

Grip range		L Length max	F Max	Mandrel loaded	Plain stem	Serrated stem
Min	Max			Dash no.	Dash no.	Dash no.
.015	.125	.343	.52	AD8C2	AD8T2	AD8W2
.126	.250	.447	.65	AD8C4	AD8T4	AD8W4
.251	.375	.572	.77	AD8C6	AD8T6	AD8W6
.376	.500	.697	.89	AD8C8	AD8T8	AD8W8
.501	.625	.822	1.02	AD8C10	AD8T10	AD8W10
.626	.750	.947	1.15	AD8C12	AD8T12	AD8W12
.751	.875	1.072	1.27	AD8C14	AD8T14	AD8W14
.876	1.000	1.195	1.40	AD8C16	AD8T16	AD8W16

THIS DOCUMENT PROVIDED BY THE ABBOTT AEROSPACE
Downloaded from http://www.everyspec.com
TECHNICAL LIBRARY
ABBOTTAEROSPACE.COM

TABLE III. Aluminum alloy 5056.

.094 Diameter, nominal

Grip range		L Length max	F Max	Plain stem	Serrated stem
Min	Max			Dash no.	Dash no.
.015	.062	.140	.281	B3T1	B3W1
.063	.125	.203	.281	B3T2	B3W2
.126	.187	.265	.343	B3T3	B3W3
.188	.250	.328	.405	B3T4	B3W4

.125 Diameter, nominal

Grip range		L Length max	F Max	Plain stem	Serrated stem
Min	Max			Dash no.	Dash no.
.015	.062	.170	.256	B4T1	B4W1
.063	.125	.232	.318	B4T2	B4W2
.126	.187	.295	.381	B4T3	B4W3
.188	.250	.357	.443	B4T4	B4W4
.251	.312	.420	.506	B4T5	B4W5
.313	.375	.482	.568	B4T6	B4W6
.376	.437	.544	.630	B4T7	B4W7
.438	.500	.607	.693	B4T8	B4W8

.156 Diameter, nominal

Grip range		L Length max	F Max	Plain stem	Serrated stem
Min	Max			Dash no.	Dash no.
.015	.125	.274	.44	B5T2	B5W2
.126	.250	.399	.56	B5T4	B5W4
.251	.375	.524	.69	B5T6	B5W6
.376	.500	.679	.81	B5T8	B5W8

.187 Diameter, nominal

Grip range		L Length max	F Max	Plain stem	Serrated stem
Min	Max			Dash no.	Dash no.
.015	.125	.301	.48	B6T2	B6W2
.126	.250	.426	.60	B6T4	B6W4
.251	.375	.551	.72	B6T6	B6W6
.376	.500	.706	.84	B6T8	B6W8
.501	.625	.801	.97	B6T10	B6W10
.626	.750	.926	1.10	B6T12	B6W12
.751	.875	1.051	1.22	B6T14	B6W14

.250 Diameter, nominal

Grip range		L Length max	F Max	Plain stem	Serrated stem
Min	Max			Dash no.	Dash no.
.015	.125	.342	.52	B8T2	B8W2
.126	.250	.447	.65	B8T4	B8W4
.251	.375	.572	.77	B8T6	B8W6
.376	.500	.687	.89	B8T8	B8W8
.501	.625	.822	1.02	B8T10	B8W10
.626	.750	.947	1.15	B8T12	B8W12
.751	.875	1.072	1.27	B8T14	B8W14
.876	1.000	1.195	1.40	B8T16	B8W16

THIS DOCUMENT PROVIDED BY THE ABBOTT AEROSPACE
Downloaded from http://www.everyspec.com
TECHNICAL LIBRARY
ABBOTTAEROSPACE.COM

TABLE IV. Nickel copper alloy (monel).

.094 Diameter, nominal

Grip range		L Length max	F Max	Mandrel loaded	Plain stem	Serrated stem
Min	Max			Dash no.	Dash no.	Dash no.
.015	.062	.140	.281	M3C1	M3T1	M3W1
.063	.125	.203	.281	M3C2	M3T2	M3W2
.126	.187	.265	.343	M3C3	M3T3	M3W3
.188	.250	.328	.405	M3C4	M3T4	M3W4

.125 Diameter, nominal

Grip range		L Length max	F Max	Mandrel loaded	Plain stem	Serrated stem
Min	Max			Dash no.	Dash no.	Dash no.
.015	.062	.170	.256	M4C1	M4T1	M4W1
.063	.125	.232	.318	M4C2	M4T2	M4W2
.126	.187	.295	.381	M4C3	M4T3	M4W3
.188	.250	.357	.443	M4C4	M4T4	M4W4
.251	.312	.420	.506	M4C5	M4T5	M4W5
.313	.375	.482	.568	M4C6	M4T6	M4W6
.376	.437	.544	.630	M4C7	M4T7	M4W7
.438	.500	.607	.693	M4C8	M4T8	M4W8

.156 Diameter, nominal

Grip range		L Length max	F Max	Mandrel loaded	Plain stem	Serrated stem
Min	Max			Dash no.	Dash no.	Dash no.
.015	.125	.274	.44	M5C2	M5T2	M5W2
.126	.250	.399	.56	M5C4	M5T4	M5W4
.251	.375	.524	.69	M5C6	M5T6	M5W6
.376	.500	.679	.81	M5C8	M5T8	M5W8

.187 Diameter, nominal

Grip range		L Length max	F Max	Mandrel loaded	Plain stem	Serrated stem
Min	Max			Dash no.	Dash no.	Dash no.
.015	.125	.301	.48	M6C2	M6T2	M6W2
.126	.250	.426	.60	M6C4	M6T4	M6W4
.251	.375	.551	.72	M6C6	M6T6	M6W6
.376	.500	.706	.84	M6C8	M6T8	M6W8
.501	.625	.801	.97	M6C10	M6T10	M6W10
.626	.750	.926	1.10	M6C12	M6T12	M6W12
.751	.875	1.051	1.22	M6C14	M6T14	M6W14

.250 Diameter, nominal

Grip range		L Length max	F Max	Mandrel loaded	Plain stem	Serrated stem
Min	Max			Dash no.	Dash no.	Dash no.
.015	.125	.342	.52	M8C2	M8T2	M8W2
.126	.250	.447	.65	M8C4	M8T4	M8W4
.251	.375	.572	.71	M8C6	M8T6	M8W6
.376	.500	.697	.89	M8C8	M8T8	M8W8
.501	.625	.822	1.02	M8C10	M8T10	M8W10
.626	.750	.947	1.15	M8C12	M8T12	M8W12
.751	.875	1.072	1.27	M8C14	M8T14	M8W14
.876	1.000	1.195	1.40	M8C16	M8T16	M8W16

THIS DOCUMENT PROVIDED BY THE ABBOTT AEROSPACE
Downloaded from http://www.everyspec.com
TECHNICAL LIBRARY
ABBOTTAEROSPACE.COM

SECTION 625

RIVET-BLIND, PROTRUDING HEAD, LOCKED SPINDLE

APPLICABLE DOCUMENT: NAS1398

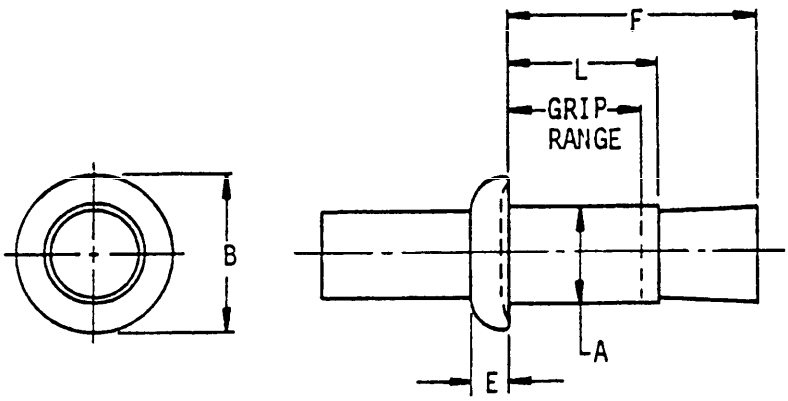

Material	Protective finish	Shear strength (psi)
Aluminum alloy 5056F	Anodize or chemical surface treatment	16,900 to 31,650
Aluminum alloy 2017T4		21,350 to 40,275
Nickel copper alloy (Monel)	None or cadmium plate or silver plate	31,000 to 41,625
Cres A286		42,200 to 79,250

TABLE I. Rivet configuration.

A Rivet size nom dia	B Dia	E	Rivet dia number
.125	.250	.054	4
.156	.312	.067	5
.190	.375	.080	6
.250	.500	.107	8

THIS DOCUMENT PROVIDED BY THE ABBOTT AEROSPACE
Downloaded from http://www.everyspec.com
TECHNICAL LIBRARY
ABBOTTAEROSPACE.COM

TABLE II. NAS1398 Dash numbers.

NAS1398 ( )4 .125 Dia				NAS1398( )5 .156 Dia				
Grip range		L Length max	F Max	Grip range		L Length max	F Max	Grip dash no.
Min	Max			Min	Max			
.025	.062	.198	.39	.031	.062	.201	.38	1
.063	.125	.260	.51	.063	.125	.263	.49	2
.126	.187	.323	.63	.126	.187	.326	.61	3
.188	.250	.385	.75	.188	.250	.388	.73	4
.251	.312	.448	.87	.251	.312	.451	.85	5
.313	.375	.510	.98	.313	.375	.513	.97	6
				.376	.437	.576	1.09	7
				.438	.500	.638	1.20	8
				-	-	-	-	9
				-	-	-	-	10
				-	-	-	-	11
				-	-	-	-	12
				-	-	-	-	13
				-	-	-	-	14

NAS1398( )6 .190 Dia				NAS1398( )8 .250 Dia				
Grip range		L Length max	F Max	Grip range		L Length max	F Max	Grip dash no.
Min	Max			Min	Max			
.037	.062	.225	.44	-	-	-	-	1
.063	.125	.287	.55	.063	.125	.323	.57	2
.126	.187	.350	.67	.126	.187	.385	.69	3
.188	.250	.412	.79	.188	.250	.448	.81	4
.251	.312	.475	.91	.251	.312	.510	.93	5
.313	.375	.537	1.03	.313	.375	.573	1.04	6
.376	.437	.600	1.15	.376	.437	.635	1.16	7
.438	.500	.662	1.27	.438	.500	.698	1.28	8
.501	.562	.725	1.44	.501	.562	.760	1.46	9
.563	.625	.787	1.56	.563	.625	.823	1.58	10
.626	.687	.850	1.68	.626	.687	.885	1.70	11
.688	.750	.912	1.81	.688	.750	.948	1.83	12
-	-	-	-	.751	.812	1.010	1.95	13
-	-	-	-	.813	.875	1.073	2.07	14

THIS DOCUMENT PROVIDED BY THE ABBOTT AEROSPACE
TECHNICAL LIBRARY
ABBOTTAEROSPACE.COM
Downloaded from http://www.everyspec.com

SECTION 626

RIVET-BLIND, PROTRUDING HEAD, MECHANICALLY LOCKED SPINDLE, BULBED

APPLICABLE DOCUMENT: NAS1738

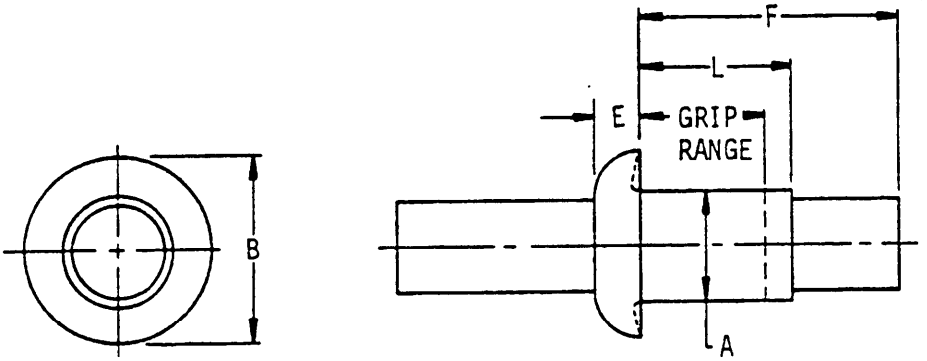

Material	Protective finish	Shear strength (psi)
Aluminum 5056	Anodize or chemical surface treatment	28,900 to 50,500
Nickel copper alloy (Monel)	None or cadmium plate	38,300 to 73,000

TABLE I. Rivet configuration.

A Dia	B Dia	E
.140	.250	.054
.173	.312	.067
.201	.375	.080

TABLE II. NAS1738 Dash numbers.

NAS1738 ( ) 4 (.125 DIA)				NAS1738 ( ) 5 (.156 DIA)				NAS1738 ( ) 6 (.188 DIA)				
Grip range		L Length max	F Max	Grip range		L Length max	F Max	Grip range		L Length max	F Max	Grip dash no.
Min	Max			Min	Max			Min	Max			
.020	.062	.219	.38	.025	.062	.250	.42	.030	.062	.281	.45	-1
.063	.125	.281	.44	.063	.125	.312	.48	.063	.125	.344	.51	-2
.126	.187	.344	.50	.126	.187	.375	.54	.126	.187	.406	.58	-3
.188	.250	.406	.57	.188	.250	.437	.60	.188	.250	.469	.64	-4
.251	.312	.469	.63	.251	.312	.500	.67	.251	.312	.531	.70	-5
-	-	-	-	.313	.375	.562	.73	.313	.375	.594	.76	-6
-	-	-	-	-	-	-	-	.376	.437	.656	.83	-7
-	-	-	-	-	-	-	-	.438	.500	.719	.89	-8

THIS DOCUMENT PROVIDED BY THE ABBOTT AEROSPACE
TECHNICAL LIBRARY
ABBOTTAEROSPACE.COM
Downloaded from http://www.everyspec.com

THIS DOCUMENT PROVIDED BY THE ABBOTT AEROSPACE
Downloaded from http://www.everyspec.com
TECHNICAL LIBRARY
ABBOTTAEROSPACE.COM

SECTION 627

RIVET, BLIND, STRUCTURAL, PULL STEM, SELF-PLUGGING, 100° FLUSH HEAD, TYPE II CLASS 2

APPLICABLE DOCUMENT MS20601

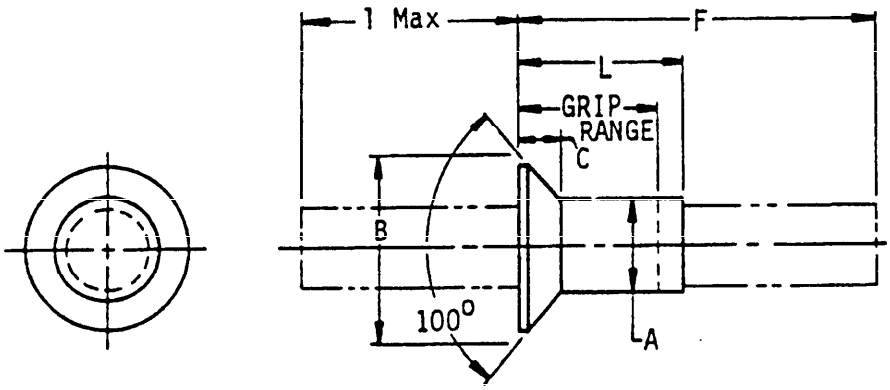

Material		Protective finish	Shear strength (psi) min
Aluminum alloy	2117	Anodize	26,000
	5056		26,000
Nickel copper alloy (Monel)		Plain or cadmium plate	49,000

TABLE I. Rivet configuration.

A Rivet size nom Dia	B Dia	C Ref
.125	.225	.042
.156	.286	.055
.188	.353	.070
.250	.476	.095

THIS DOCUMENT PROVIDED BY THE ABBOTT AEROSPACE
Downloaded from http://www.everyspec.com
TECHNICAL LIBRARY
ABBOTTAEROSPACE.COM

TABLE II. With serrated stem.

Grip range Min	Grip range Max	L Length max	F Max	2117 A1 Dash no.	5056 A1 Dash no.	Monel Dash no.	Monel, cadmium plated Dash no.
.125 Rivet diameter, nominal							
Up to .062	.170	.500	AD4W1	B4W1	M4W1	MP4W1	
.063	.125	.232	.562	AD4W2	B4W2	M4W2	MP4W2
.126	.187	.295	.750	AD4W3	B4W3	M4W3	MP4W3
.188	.250	.357	.812	AD4W4	B4W4	M4W4	MP4W4
.251	.312	.420	1.010	AD4W5	B4W5	M4W5	MP4W5
.313	.375	.482	1.072	AD4W6	B4W6	M4W6	MP4W6
.376	.437	.545	1.197	AD4W7	B4W7	M4W7	MP4W7
.438	.500	.607	1.322	AD4W8	B4W8	M4W8	MP4W8
.501	.562	.670	1.509	AD4W9	B4W9	M4W9	MP4W9
.156 Rivet diameter, nominal							
.065	.125	.254	.620	AD5W2	B5W2	M5W2	MP5W2
.126	.187	.317	.808	AD5W3	B5W3	M5W3	MP5W3
.188	.250	.379	.870	AD5W4	B5W4	M5W4	MP5W4
.251	.312	.441	1.058	AD5W5	B5W5	M5W5	MP5W5
.313	.375	.503	1.120	AD5W6	B5W6	M5W6	MP5W6
.376	.437	.567	1.339	AD5W7	B5W7	M5W7	MP5W7
.438	.500	.629	1.401	AD5W8	B5W8	M5W8	MP5W8
.501	.562	.692	1.567	AD5W9	B5W9	M5W9	MP5W9
.563	.625	.754	1.630	AD5W10	B5W10	M5W10	MP5W10
.626	.687	.817	1.817	AD5W11	B5W11	M5W11	MP5W11
.688	.750	.879	1.880	AD5W12	B5W12	M5W12	MP5W12
.751	.812	.942	2.067	AD5W13	B5W13	M5W13	MP5W13
.813	.875	1.004	2.130	AD5W14	B5W14	M5W14	MP5W14
.188 Rivet diameter, nominal							
.080	.125	.277	.700	AD6W2	B6W2	M6W2	MP6W2
.126	.187	.340	.888	AD6W3	B6W3	M6W3	MP6W3
.188	.250	.402	.950	AD6W4	B6W4	M6W4	MP6W4
.251	.312	.465	1.138	AD6W5	B6W5	M6W5	MP6W5
.313	.375	.527	1.200	AD6W6	B6W6	M6W6	MP6W6
.376	.437	.590	1.419	AD6W7	B6W7	M6W7	MP6W7
.438	.500	.652	1.481	AD6W8	B6W8	M6W8	MP6W8
.501	.562	.715	1.637	AD6W9	B6W9	M6W9	MP6W9
.563	.625	.777	1.699	AD6W10	B6W10	M6W10	MP6W10
.626	.687	.840	1.887	AD6W11	B6W11	M6W11	MP6W11
.688	.750	.902	1.949	AD6W12	B6W12	M6W12	MP6W12
.751	.812	.965	2.074	AD6W13	B6W13	M6W13	MP6W13
.813	.875	1.027	2.199	AD6W14	B6W14	M6W14	MP6W14
.250 Rivet diameter, nominal							
.125	.187	.385	.968	AD8W3	B8W3	M8W3	MP8W3
.188	.250	.447	1.030	AD8W4	B8W4	M8W4	MP8W4
.251	.312	.510	1.218	AD8W5	B8W5	M8W5	MP8W5
.313	.375	.572	1.280	AD8W6	B8W6	M8W6	MP8W6
.376	.437	.635	1.468	AD8W7	B8W7	M8W7	MP8W7
.438	.500	.697	1.530	AD8W8	B8W8	M8W8	MP8W8
.501	.562	.760	1.718	AD8W9	B8W9	M8W9	MP8W9
.563	.625	.822	1.780	AD8W10	B8W10	M8W10	MP8W10
.626	.687	.885	1.968	AD8W11	B8W11	M8W11	MP8W11
.688	.750	.947	2.030	AD8W12	B8W12	M8W12	MP8W12
.751	.812	1.010	2.218	AD8W13	B8W13	M8W13	MP8W13
.813	.875	1.072	2.280	AD8W14	B8W14	M8W14	MP8W14
.876	.937	1.134	2.405	AD8W15	B8W15	M8W15	MP8W15
.938	1.000	1.198	2.530	AD8W16	B8W16	M8W16	MP8W16

THIS DOCUMENT PROVIDED BY THE ABBOTT AEROSPACE
Downloaded from http://www.everyspec.com
TECHNICAL LIBRARY
ABBOTTAEROSPACE.COM

SECTION 628

RIVET, BLIND, STRUCTURAL, PULL STEM, SELF-PLUGGING, PROTRUDING HEAD, TYPE I

APPLICABLE DOCUMENT: MS20600

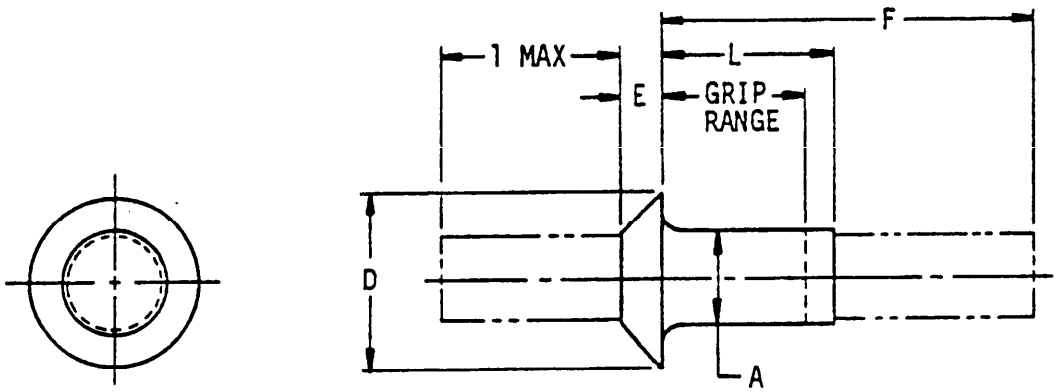

Material		Protective finish	Shear strength (psi) min
Aluminum alloy	2117	Anodize	26,000
	5056		24,000
Nickel copper alloy (Monel)		Plain or cadmium plate	49,000

TABLE I. Rivet configuration.

A Rivet size nom dia	Universal head	
	D Dia	E
.125	.250	.054
.156	.312	.067
.188	.375	.080
.250	.500	.107

THIS DOCUMENT PROVIDED BY THE ABBOTT AEROSPACE
Downloaded from http://www.everyspec.com
TECHNICAL LIBRARY
ABBOTTAEROSPACE.COM

TABLE II. With serrated stem.

Grip range Min	Grip range Max	L Length max	F Max	2117 A1 Dash no.	5056 A1 Dash no.	Monel Dash no.	Monel, cadmium plated Dash no.
.125 Rivet diameter, nominal							
Up to	.062	.170	.500	AD4W1	B4W1	M4W1	MP4W1
.063	.125	.232	.600	AD4W2	B4W2	M4W2	MP4W2
.126	.187	.295	.750	AD4W3	B4W3	M4W3	MP4W3
.188	.250	.357	.850	AD4W4	B4W4	M4W4	MP4W4
.251	.312	.420	1.010	AD4W5	B4W5	M4W5	MP4W5
.313	.375	.482	1.100	AD4W6	B4W6	M4W6	MP4W6
.376	.437	.545	1.197	AD4W7	B4W7	M4W7	MP4W7
.438	.500	.607	1.322	AD4W8	B4W8	M4W8	MP4W8
.501	.562	.670	1.509	AD4W9	B4W9	M4W9	MP4W9
.156 Rivet diameter, nominal							
Up to	.062	.192	.558	AD5W1	B5W1	M5W1	MP5W1
.063	.125	.254	.620	AD5W2	B5W2	M5W2	MP5W2
.126	.187	.317	.808	AD5W3	B5W3	M5W3	MP5W3
.188	.250	.379	.870	AD5W4	B5W4	M5W4	MP5W4
.251	.312	.441	1.058	AD5W5	B5W5	M5W5	MP5W5
.313	.375	.503	1.120	AD5W6	B5W6	M5W6	MP5W6
.376	.437	.567	1.339	AD5W7	B5W7	M5W7	MP5W7
.438	.500	.629	1.401	AD5W8	B5W8	M5W8	MP5W8
.501	.562	.692	1.567	AD5W9	B5W9	M5W9	MP5W9
.563	.625	.754	1.630	AD5W10	B5W10	M5W10	MP5W10
.626	.687	.817	1.817	AD5W11	B5W11	M5W11	MP5W11
.688	.750	.879	1.880	AD5W12	B5W12	M5W12	MP5W12
.751	.812	.942	2.087	AD5W13	B5W13	M5W13	MP5W13
.813	.875	1.004	2.130	AD5W14	B5W14	M5W14	MP5W14
.188 Rivet diameter, nominal							
Up to	.062	.215	.638	AD6W1	B6W1	M6W1	MP6W1
.063	.125	.277	.700	AD6W2	B6W2	M6W2	MP6W2
.126	.187	.340	.888	AD6W3	B6W3	M6W3	MP6W3
.188	.250	.402	.950	AD6W4	B6W4	M6W4	MP6W4
.251	.312	.465	1.138	AD6W5	B6W5	M6W5	MP6W5
.313	.375	.527	1.200	AD6W6	B6W6	M6W6	MP6W6
.376	.437	.590	1.419	AD6W7	B6W7	M6W7	MP6W7
.438	.500	.652	1.481	AD6W8	B6W8	M6W8	MP6W8
.501	.562	.715	1.637	AD6W9	B6W9	M6W9	MP6W9
.563	.625	.777	1.699	AD6W10	B6W10	M6W10	MP6W10
.626	.687	.840	1.887	AD6W11	B6W11	M6W11	MP6W11
.688	.750	.902	1.949	AD6W12	B6W12	M6W12	MP6W12
.751	.812	.965	2.074	AD6W13	B6W13	M6W13	MP6W13
.813	.875	1.027	2.199	AD6W14	B6W14	M6W14	MP6W14
.250 Rivet diameter, nominal							
.125	.187	.385	.970	AD8W3	B8W3	M8W3	MP8W3
.188	.250	.447	1.090	AD8W4	B8W4	M8W4	MP8W4
.251	.312	.510	1.220	AD8W5	B8W5	M8W5	MP8W5
.313	.375	.572	1.340	AD8W6	B8W6	M8W6	MP8W6
.376	.437	.635	1.470	AD8W7	B8W7	M8W7	MP8W7
.438	.500	.697	1.590	AD8W8	B8W8	M8W8	MP8W8
.501	.562	.760	1.720	AD8W9	B8W9	M8W9	MP8W9
.563	.625	.822	1.840	AD8W10	B8W10	M8W10	MP8W10
.626	.687	.885	1.970	AD8W11	B8W11	M8W11	MP8W11
.688	.750	.947	2.090	AD8W12	B8W12	M8W12	MP8W12
.751	.812	1.010	2.220	AD8W13	B8W13	M8W13	MP8W13
.813	.875	1.072	2.340	AD8W14	B8W14	M8W14	MP8W14
.876	.937	1.134	2.405	AD8W15	B8W15	M8W15	MP8W15
.938	1.000	1.196	2.530	AD8W16	B8W16	M8W16	MP8W16

THIS DOCUMENT PROVIDED BY THE ABBOTT AEROSPACE
Downloaded from http://www.everyspec.com
TECHNICAL LIBRARY
ABBOTTAEROSPACE.COM

SECTION 629

RIVET, BLIND - UNIVERSAL HEAD, DRIVE TYPE

APPLICABLE DOCUMENT: MS24662

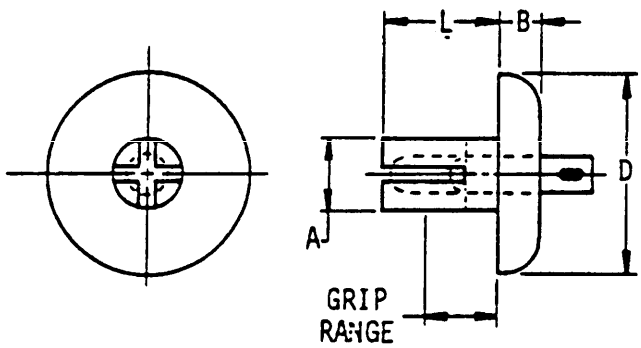

Material		Protective finish	Shear strength (psi) min
Aluminum alloy	2117-T4	Anodized	26,000
	5056-H32	Plain	24,000
Carbon steel		Cadmium plate	32,000

THIS DOCUMENT PROVIDED BY THE ABBOTT AEROSPACE
Downloaded from http://www.everyspec.com
TECHNICAL LIBRARY
ABBOTTAEROSPACE.COM

TABLE I. Rivet configuration dash numbers.

A Dia	B Head height	D Head diameter	Grip range Min	Grip range Max	L Length	MS24662 Dash no. Aluminum 2117	MS24662 Dash no. Aluminum 5056	MS24662 Dash no. Carbon steel
.125	.054	.250	.046	.078	.156	3	170	4
			.079	.109	.188	5	171	6
			.110	.140	.219	7	172	8
			.141	.171	.250	9	173	10
			.172	.203	.281	11	174	12
			.204	.234	.312	13	175	14
			.235	.265	.344	15	176	16
			.266	.296	.375	17	177	18
			.297	.328	.406	19	178	20
			.329	.359	.438	21	179	22
			.360	.390	.469	23	180	24
			.391	.421	.500	25	181	26
.156	.067	.312	.046	.078	.188	27	182	28
			.079	.109	.219	29	183	30
			.110	.140	.250	31	184	32
			.141	.171	.281	33	185	34
			.172	.203	.312	35	186	36
			.204	.234	.344	37	187	38
			.235	.265	.375	39	188	40
			.266	.296	.406	41	189	42
			.297	.328	.438	43	190	44
			.329	.359	.469	45	191	46
			.360	.390	.500	47	192	48
			.391	.421	.531	49	193	50
			.422	.453	.562	51	194	52
			.454	.484	.593	53	195	54
			.485	.515	.625	55	196	56
			.516	.546	.656	57	197	58
			.547	.578	.688	59	198	60
			.579	.609	.718	61	199	62
			.610	.640	.750	63	200	64
.188	.080	.375	.046	.109	.250	150	201	221
			.110	.171	.281	151	202	222
			.172	.234	.344	152	203	223
			.235	.296	.406	153	204	224
			.297	.359	.469	154	205	225
			.360	.421	.531	155	206	226
			.422	.484	.594	156	207	227
			.455	.546	.656	157	208	228
			.547	.609	.719	158	209	229
			.610	.671	.781	159	210	230
.250	.107	.500	.046	.109	.250	160	211	231
			.110	.171	.281	161	212	232
			.172	.234	.344	162	213	233
			.235	.296	.406	163	214	234
			.297	.359	.469	164	215	235
			.360	.421	.531	165	216	236
			.422	.484	.594	166	217	237
			.485	.546	.656	167	218	238
			.547	.609	.719	168	219	239
			.610	.671	.781	169	220	240

THIS DOCUMENT PROVIDED BY THE ABBOTT AEROSPACE
Downloaded from http://www.everyspec.com
TECHNICAL LIBRARY
ABBOTTAEROSPACE.COM

SECTION 701

PIN, 100° CSK. HEAD
HI-SHEAR RIVET, CLOSE TOLERANCE, 1200°F

APPLICABLE DOCUMENT: NAS1583

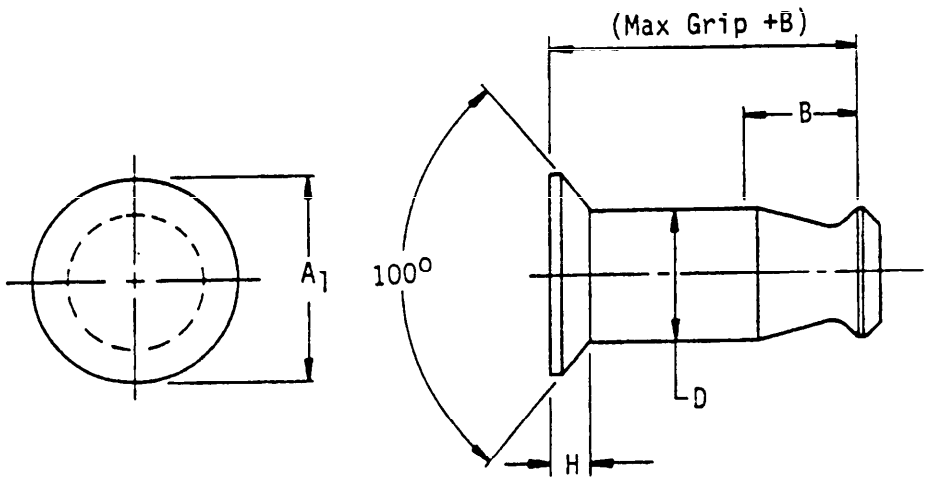

Material	Protective finish	Shear strength (psi)
Inconel-X	Passivate	83,000 to 96,000

Table I. Rivet configuration dash numbers.

Nom dia	A_1 Min ref	B Ref	H	First dash no.
.125	.1787	.083	.0354	-4
.188	.2578	.125	.0485	-6
.250	.3504	.165	.0631	-8
.312	.4289	.206	.0704	-10
.375	.5149	.248	.0810	-12

NOTE: Second dash number (see NAS1583) designates maximum grip in 1/16 of an inch increments up to and including one inch.

THIS DOCUMENT PROVIDED BY THE ABBOTT AEROSPACE
TECHNICAL LIBRARY
ABBOTTAEROSPACE.COM
Downloaded from http://www.everyspec.com

THIS DOCUMENT PROVIDED BY THE ABBOTT AEROSPACE
TECHNICAL LIBRARY
ABBOTTAEROSPACE.COM
Downloaded from http://www.everyspec.com

SECTION 702

PIN, FLAT HEAD

HI-SHEAR RIVET, CLOSE TOLERANCE, 1200°F

APPLICABLE DOCUMENT: NAS1584

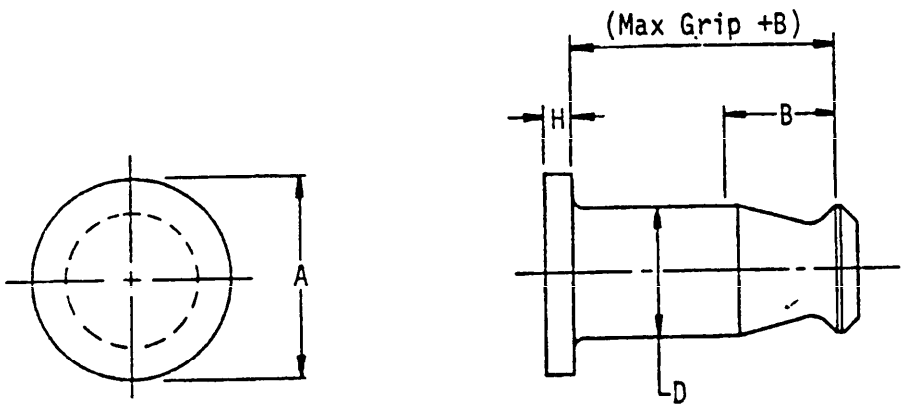

Material	Protective finish	Shear strength (psi)
Inconel-X	Passivate	83,000 to 90,000

TABLE I. Rivet configuration dash numbers.

Nom dia	A Min ref	B Ref	H	First dash no.
.125	.208 .188	.083	.039 .029	-4
.188	.315 .295	.125	.055 .045	-6
.250	.412 .387	.165	.069 .059	-8
.312	.505 .475	.206	.078 .068	-10
.375	.600 .565	.248	.088 .078	-12

NOTE: Second dash number (see NAS1584) designates maximum grip in 1/16 of an inch increments up to and including one inch.

THIS DOCUMENT PROVIDED BY THE ABBOTT AEROSPACE
TECHNICAL LIBRARY
ABBOTTAEROSPACE.COM
Downloaded from http://www.everyspec.com

THIS DOCUMENT PROVIDED BY ABBOTT AEROSPACE
Downloaded from http://www.everyspec.com
TECHNICAL LIBRARY
ABBOTTAEROSPACE.COM

SECTION 703

RIVET-100° COUNTERSUNK HEAD CORROSION RESISTANT STEEL

APPLICABLE DOCUMENT: AN124951 THRU AN125100

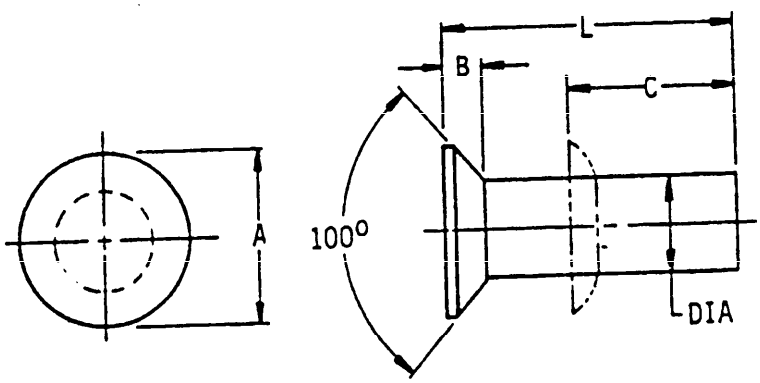

Material	Protective finish	Shear strength (psi) min
Cres 18Cr-8Ni	Not specified	Not specified

TABLE I. Rivet configuration part numbers.

Dia	A	B	C	L Length	Part no.
.062	.105	.022	.116	.188 .250 .312 .375 .438 .500 .562	AN124952 AN124953 AN124954 AN124955 AN124956 AN124957 AN124958
.094	.170	.036	.169	.250 .312 .375 .438 .500 .562	AN124971 AN124972 AN124973 AN124974 AN124975 AN124976
.125	.216	.042	.225	.312 .375 .438 .500 .562	AN124990 AN124991 AN124992 AN124993 AN124994
.156	.273	.055	.281	.375 .438 .500 .562	AN125009 AN125010 AN125011 AN125012
.188	.344	.070	.338	.438 .500 .562	AN125028 AN125029 AN125030

THIS DOCUMENT PROVIDED BY THE ABBOTT AEROSPACE
TECHNICAL LIBRARY
ABBOTTAEROSPACE.COM
Downloaded from http://www.everyspec.com

THIS DOCUMENT PROVIDED BY THE ABBOTT AEROSPACE
Downloaded from http://www.everyspec.com
TECHNICAL LIBRARY
ABBOTTAEROSPACE.COM

SECTION 704

RIVET-100° COUNTERSUNK HEAD HI-SHEAR CLOSE TOLERANCE HEAD AND SHANK

APPLICABLE DOCUMENT: NAS525

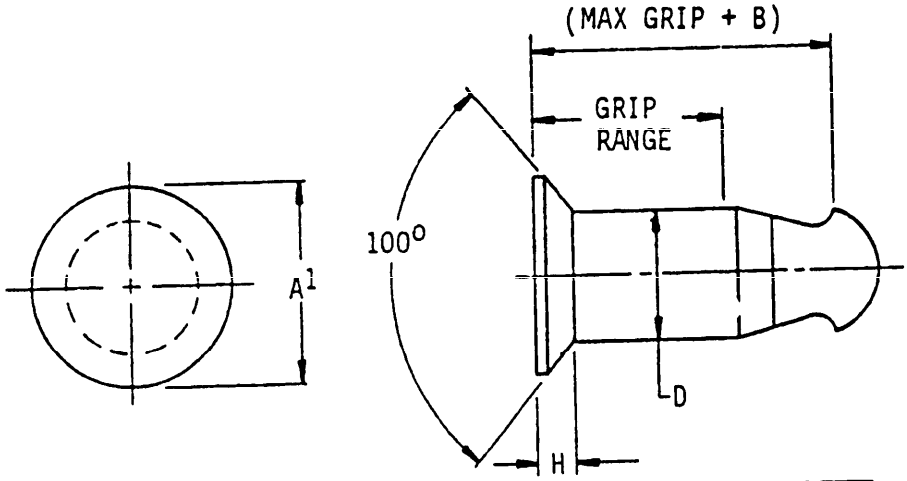

Material	Protective finish	Shear strength (psi) min
Alloy steel	Cadmium plate	95,000

TABLE I. Rivet configuration dash numbers.

D	A1	B	H	Grip range Min	Grip range Max	NAS525 Dash no.
				.062	.125	-4-2
				.126	.188	-4-3
				.189	.250	-4-4
				.251	.312	-4-5
				.313	.375	-4-6
				.376	.438	-4-7
				.439	.500	-4-8
				.501	.562	-4-9
				.563	.625	-4-10
				.626	.688	-4-11
				.689	.750	-4-12
				.751	.812	-4-13
				.813	.875	-4-14
				.876	.938	-4-15
				.939	1.000	-4-16
				1.001	1.062	-4-17
				1.063	1.125	-4-18
.125	.179	.083	.035	1.126	1.188	-4-19
				1.189	1.250	-4-20
				1.251	1.312	-4-21
				1.313	1.375	-4-22
				1.376	1.438	-4-23
				1.439	1.500	-4-24
				1.501	1.562	-4-25
				1.563	1.625	-4-26
				1.626	1.688	-4-27
				1.689	1.750	-4-28
				1.751	1.812	-4-29
				1.813	1.875	-4-30
				1.876	1.938	-4-31
				1.939	2.000	-4-32
				2.001	2.062	-4-33
				2.063	2.125	-4-34
				2.126	2.188	-4-35
				2.189	2.250	-4-36

TABLE I. Rivet configuration dash numbers. - Continued

D	A[1]	B	H	Grip range Min	Grip range Max	NAS 525 Dash no.	D	A[1]	B	H	Grip range Min	Grip range Max	NAS 525 Dash no.
				.062	.125	-5-2					.062	.125	-6-2
				.126	.188	-5-3					.126	.188	-6-3
				.189	.250	-5-4					.189	.250	-6-4
				.251	.312	-5-5					.251	.312	-6-5
				.313	.375	-5-6					.313	.375	-6-6
				.376	.438	-5-7					.376	.438	-6-7
				.439	.500	-5-8					.439	.500	-6-8
				.501	.562	-5-9					.501	.562	-6-9
				.563	.625	-5-10					.563	.625	-6-10
				.626	.688	-5-11					.626	.688	-6-11
				.689	.750	-5-12					.689	.750	-6-12
				.751	.812	-5-13					.751	.812	-6-13
				.813	.875	-5-14					.813	.875	-6-14
				.876	.938	-5-15					.876	.938	-6-15
				.939	1.000	-5-16					.939	1.000	-6-16
				1.001	1.062	-5-17					1.001	1.062	-6-17
				1.063	1.125	-5-18					1.063	1.125	-6-18
.156	.220	.114	.042	1.126	1.188	-5-19	.188	.258	.125	.049	1.126	1.188	-6-19
				1.189	1.250	-5-20					1.189	1.250	-6-20
				1.251	1.312	-5-21					1.251	1.312	-6-21
				1.313	1.375	-5-22					1.313	1.375	-6-22
				1.376	1.438	-5-23					1.376	1.438	-6-23
				1.439	1.500	-5-24					1.439	1.500	-6-24
				1.501	1.562	-5-25					1.501	1.562	-6-25
				1.563	1.625	-5-26					1.563	1.625	-6-26
				1.626	1.688	-5-27					1.626	1.688	-6-27
				1.689	1.750	-5-28					1.689	1.750	-6-28
				1.751	1.812	-5-29					1.751	1.812	-6-29
				1.813	1.875	-5-30					1.813	1.875	-6-30
				1.876	1.938	-5-31					1.876	1.938	-6-31
				1.939	2.000	-5-32					1.939	2.000	-6-32
				2.001	2.062	-5-33					2.001	2.062	-6-33
				2.063	2.125	-5-34					2.063	2.125	-6-34
				2.126	2.188	-5-35					2.126	2.188	-6-35
				2.189	2.250	-5-36					2.189	2.250	-6-36

THIS DOCUMENT PROVIDED BY THE ABBOTT AEROSPACE
Downloaded from http://www.everyspec.com
TECHNICAL LIBRARY
ABBOTTAEROSPACE.COM

TABLE I. Rivet configuration dash numbers. - Continued

D	A[1]	B	H	Grip range Min	Grip range Max	NAS 525 dash no.	D	A[1]	B	H	Grip range Min	Grip range Max	NAS 525 Dash no.
				.126	.188	-8-3							
				.189	.250	-8-4					.126	.188	-10-3
				.251	.312	-8-5					.189	.250	-10-4
				.313	.375	-8-6					.251	.312	-10-5
				.376	.438	-8-7					.313	.375	-10-6
											.376	.438	-10-7
				.439	.500	-8-8							
				.501	.562	-8-9					.439	.500	-10-8
				.563	.625	-8-10					.501	.562	-10-9
				.626	.688	-8-11					.563	.625	-10-10
				.689	.750	-8-12					.626	.688	-10-11
											.689	.750	-10-12
				.751	.812	-8-13							
				.813	.875	-8-14					.751	.812	-10-13
				.876	.938	-8-15					.813	.875	-10-14
				.939	1.000	-8-16					.876	.938	-10-15
				1.001	1.062	-8-17					.939	1.000	-10-16
											1.001	1.062	-10-17
				1.063	1.125	-8-18							
.250	.350	.165	.063	1.126	1.188	-8-19	.312	.429	.206	.070	1.063	1.125	-10-18
				1.189	1.250	-8-20					1.126	1.188	-10-19
				1.251	1.312	-8-21					1.189	1.250	-10-20
				1.313	1.375	-8-22					1.251	1.312	-10-21
											1.313	1.375	-10-22
				1.376	1.438	-8-23							
				1.439	1.500	-8-24					1.376	1.438	-10-23
				1.501	1.562	-8-25					1.439	1.500	-10-24
				1.563	1.625	-8-26					1.501	1.562	-10-25
				1.626	1.688	-8-27					1.563	1.625	-10-26
											1.626	1.688	-10-27
				1.689	1.750	-8-28							
				1.751	1.812	-8-29					1.689	1.750	-10-28
				1.813	1.875	-8-30					1.751	1.812	-10-29
				1.876	1.938	-8-31					1.813	1.875	-10-30
				1.939	2.000	-8-32					1.876	1.938	-10-31
											1.939	2.000	-10-32
				2.001	2.062	-8-33							
				2.063	2.125	-8-34					2.001	2.062	-10-33
				2.126	2.188	-8-35					2.063	2.125	-10-34
				2.189	2.250	-8-36					2.126	2.188	-10-35
											2.189	2.250	-10-36

THIS DOCUMENT DOWNLOADED FROM HTTP://WWW.EVERYSPEC.COM
TECHNICAL LIBRARY
ABBOTTAEROSPACE.COM

THIS DOCUMENT PROVIDED BY THE ABBOTT AEROSPACE
Downloaded from http://www.everyspec.com
TECHNICAL LIBRARY
ABBOTTAEROSPACE.COM

TABLE I. Rivet configuration dash numbers. - Continued

D	A[1]	B	H	Grip range Min	Grip range Max	NAS525 Dash no.
				.189	.250	-12-4
				.251	.312	-12-5
				.313	.375	-12-6
				.376	.438	-12-7
				.439	.500	-12-8
				.501	.562	-12-9
				.563	.625	-12-10
				.626	.688	-12-11
				.689	.750	-12-12
				.751	.812	-12-13
				.813	.875	-12-14
				.876	.938	-12-15
				.939	1.000	-12-16
				1.001	1.062	-12-17
				1.063	1.125	-12-18
				1.126	1.188	-12-19
				1.189	1.250	-12-20
.375	.515	.248	.081	1.251	1.312	-12-21
				1.313	1.375	-12-22
				1.376	1.438	-12-23
				1.439	1.500	-12-24
				1.501	1.562	-12-25
				1.563	1.625	-12-26
				1.626	1.688	-12-27
				1.689	1.750	-12-28
				1.751	1.812	-12-29
				1.813	1.875	-12-30
				1.876	1.938	-12-31
				1.939	2.000	-12-32
				2.001	2.062	-12-33
				2.063	2.125	-12-34
				2.126	2.188	-12-35
				2.189	2.250	-12-36

Note: NAS525-4 thru -12 rivets to be installed with NAS528 collars of the same dash number (see section 202).

THIS DOCUMENT PROVIDED BY THE ABBOTT AEROSPACE
Downloaded from http://www.everyspec.com
TECHNICAL LIBRARY
ABBOTTAEROSPACE.COM

SECTION 705

RIVET-100° COUNTERSUNK HEAD, MILD STEEL

APPLICABLE DOCUMENT: AS125101 THRU AS125250

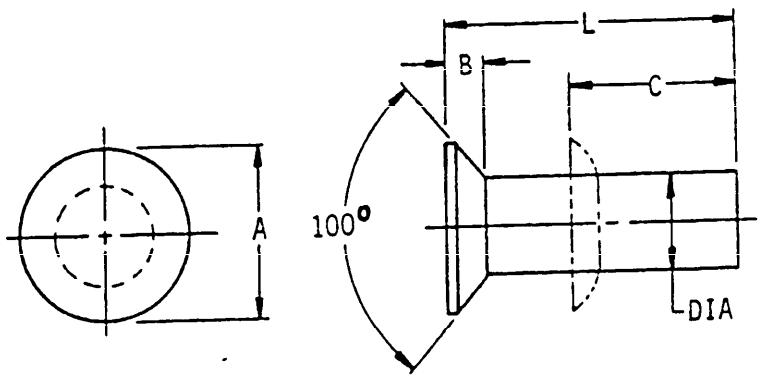

Material	Protective finish	Shear strength (psi) min
Carbon steel AMS7225	Cadmium plate	Not specified

TABLE I. Rivet configuration part numbers.

Dia	A	B	C	L Length	Part no.
*.062	.105	.022	.094	.188 .250 .312 .375 .438 .500 .562	AS125102 AS125103 AS125104 AS125105 AS125106 AS125107 AS125108
.094	.170	.036	.141	.250 .312 .375 .438 .500 .562	AS125121 AS125122 AS125123 AS125124 AS125125 AS125126
.125	.216	.042	.188	.250 .312 .375 .438 .500 .562	AS125139 AS125140 AS125141 AS125142 AS125143 AS125144
.156	.273	.055	.234	.312 .375 .438 .500 .562	AS125158 AS125159 AS125160 AS125161 AS125162
.188	.344	.070	.281	.375 .438 .500 .562	AS125177 AS125178 AS125179 AS125180

THIS DOCUMENT PROVIDED BY THE ABBOTT AEROSPACE
TECHNICAL LIBRARY
ABBOTTAEROSPACE.COM
Downloaded from http://www.everyspec.com

THIS DOCUMENT PROVIDED BY THE ABBOTT AEROSPACE
Downloaded from http://www.everyspec.com
TECHNICAL LIBRARY
ABBOTTAEROSPACE.COM

SECTION 706

RIVET-FLAT HEAD, HI-SHEAR, CLOSE TOLERANCE SHANK

APPLICABLE DOCUMENT: NAS529

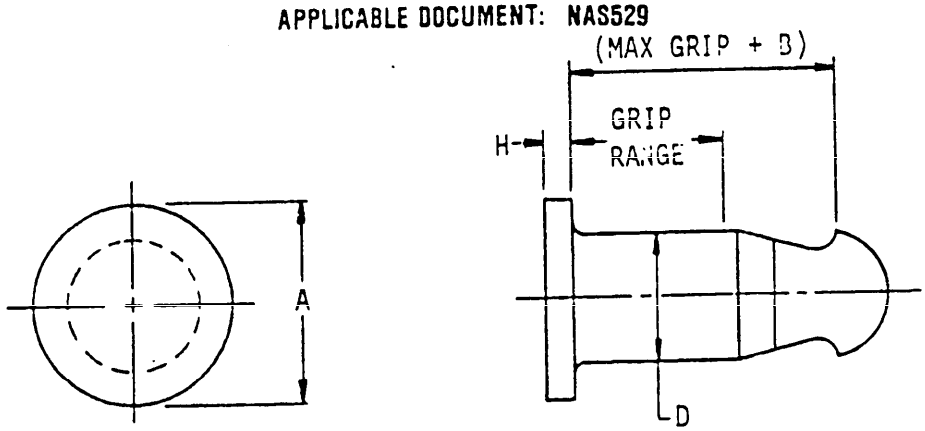

Material	Protective finish	Shear strength (psi) min
Alloy steel	Cadmium plate	95,000

TABLE I. Rivet configuration dash numbers.

D Dia	A Dia	B	H	Grip range Min	Grip range Max	NAS529 Dash no.
				.062	.125	-4-2
				.126	.188	-4-3
				.189	.250	-4-4
				.251	.312	-4-5
				.313	.375	-4-6
				.376	.438	-4-7
				.439	.500	-4-8
				.501	.562	-4-9
				.563	.625	-4-10
				.626	.688	-4-11
				.689	.750	-4-12
				.751	.812	-4-13
				.813	.875	-4-14
				.876	.938	-4-15
				.939	1.000	-4-16
				1.001	1.062	-4-17
				1.063	1.125	-4-18
.125	.188-.208	.083	.029-.039	1.126	1.188	-4-19
				1.189	1.250	-4-20
				1.251	1.312	-4-21
				1.313	1.375	-4-22
				1.376	1.438	-4-23
				1.439	1.500	-4-24
				1.501	1.562	-4-25
				1.563	1.625	-4-26
				1.626	1.688	-4-27
				1.689	1.750	-4-28
				1.751	1.812	-4-29
				1.813	1.875	-4-30
				1.876	1.938	-4-31
				1.939	2.000	-4-32
				2.001	2.062	-4-33
				2.063	2.125	-4-34
				2.126	2.188	-4-35
				2.189	2.250	-4-36

D Dia	A Dia	B	H	Grip range Min	Grip range Max	NAS529 Dash no.
				.062	.125	-5-2
				.126	.188	-5-3
				.189	.250	-5-4
				.251	.312	-5-5
				.313	.375	-5-6
				.376	.438	-5-7
				.439	.500	-5-8
				.501	.562	-5-9
				.563	.625	-5-10
				.626	.688	-5-11
				.689	.750	-5-12
				.751	.812	-5-13
				.813	.875	-5-14
				.876	.938	-5-15
				.939	1.000	-5-16
				1.001	1.062	-5-17
				1.063	1.125	-5-18
.156	.242-.262	.114	.037-.047	1.126	1.188	-5-19
				1.189	1.250	-5-20
				1.251	1.312	-5-21
				1.313	1.375	-5-22
				1.376	1.438	-5-23
				1.439	1.500	-5-24
				1.501	1.562	-5-25
				1.563	1.625	-5-26
				1.626	1.688	-5-27
				1.689	1.750	-5-28
				1.751	1.812	-5-29
				1.813	1.875	-5-30
				1.876	1.938	-5-31
				1.939	2.000	-5-32
				2.001	2.062	-5-33
				2.063	2.125	-5-34
				2.126	2.188	-5-35
				2.189	2.250	-5-36

THIS DOCUMENT PROVIDED BY THE ABBOTT AEROSPACE
Downloaded from http://www.everyspec.com
TECHNICAL LIBRARY
ABBOTTAEROSPACE.COM

TABLE I. Rivet configuration dash numbers. - Continued

D Dia	A Dia	B	H	Grip range Min	Grip range Max	NAS529 Dash no.
				.062	.125	-6-2
				.126	.188	-6-3
				.189	.250	-6-4
				.251	.312	-6-5
				.313	.375	-6-6
				.376	.438	-6-7
				.439	.500	-6-8
				.501	.562	-6-9
				.563	.625	-6-10
				.626	.688	-6-11
				.689	.750	-6-12
				.751	.812	-6-13
				.813	.875	-6-14
				.876	.938	-6-15
				.939	1.000	-6-16
				1.001	1.062	-6-17
				1.063	1.125	-6-18
.188	.295 - .315	.125	.045 - .055	1.126	1.188	-6-19
				1.189	1.250	-6-20
				1.251	1.312	-6-21
				1.313	1.375	-6-22
				1.376	1.438	-6-23
				1.439	1.500	-6-24
				1.501	1.562	-6-25
				1.563	1.625	-6-26
				1.626	1.688	-6-27
				1.689	1.750	-6-28
				1.751	1.812	-6-29
				1.813	1.875	-6-30
				1.876	1.938	-6-31
				1.939	2.000	-6-32
				2.001	2.062	-6-33
				2.063	2.125	-6-34
				2.126	2.188	-6-35
				2.189	2.250	-6-36
				.126	.188	-10-3
				.189	.250	-10-4
				.251	.312	-10-5
				.313	.375	-10-6
				.376	.438	-10-7
				.439	.500	-10-8
				.501	.562	-10-9
				.563	.625	-10-10
				.626	.688	-10-11
				.689	.750	-10-12
				.751	.812	-10-13
				.813	.875	-10-14
				.876	.938	-10-15
				.939	1.000	-10-16
				1.001	1.062	-10-17
				1.063	1.125	-10-18
.312	.475 - .505	.206	.068 - .078	1.126	1.188	-10-19
				1.189	1.250	-10-20
				1.251	1.312	-10-21
				1.313	1.375	-10-22
				1.376	1.438	-10-23
				1.439	1.500	-10-24
				1.501	1.562	-10-25
				1.563	1.625	-10-26
				1.626	1.688	-10-27
				1.689	1.750	-10-28
				1.751	1.812	-10-29
				1.813	1.875	-10-30
				1.876	1.938	-10-31
				1.939	2.000	-10-32
				2.001	2.062	-10-33
				2.063	2.125	-10-34
				2.126	2.188	-10-35
				2.189	2.250	-10-36
				.189	.250	-12-4
				.251	.312	-12-5
				.313	.375	-12-6
				.376	.438	-12-7
				.439	.500	-12-8
				.501	.562	-12-9
				.563	.625	-12-10
				.626	.688	-12-11
				.689	.750	-12-12
				.751	.812	-12-13
				.813	.875	-12-14
				.876	.938	-12-15
				.939	1.000	-12-16
				1.001	1.062	-12-17
				1.063	1.125	-12-18
.375	.565 - .600	.248	.078 - .088	1.126	1.188	-12-19
				1.189	1.250	-12-20
				1.251	1.312	-12-21
				1.313	1.375	-12-22
				1.376	1.438	-12-23
				1.439	1.500	-12-24
				1.501	1.562	-12-25
				1.563	1.625	-12-26
				1.626	1.688	-12-27
				1.689	1.750	-12-28
				1.751	1.812	-12-29
				1.813	1.875	-12-30
				1.876	1.938	-12-31
				1.939	2.000	-12-32
				2.001	2.062	-12-33
				2.063	2.125	-12-34
				2.126	2.188	-12-35
				2.189	2.250	-12-36

NOTE: NAS529-4 thru -12 Rivets to be installed with NAS528 collars of the same dash number. (see section 202).

THIS DOCUMENT PROVIDED BY THE ABBOTT AEROSPACE
Downloaded from http://www.everyspec.com
TECHNICAL LIBRARY
ABBOTTAEROSPACE.COM

SECTION 707

RIVET, SOLID-BELT

APPLICABLE DOCUMENT: MS35745

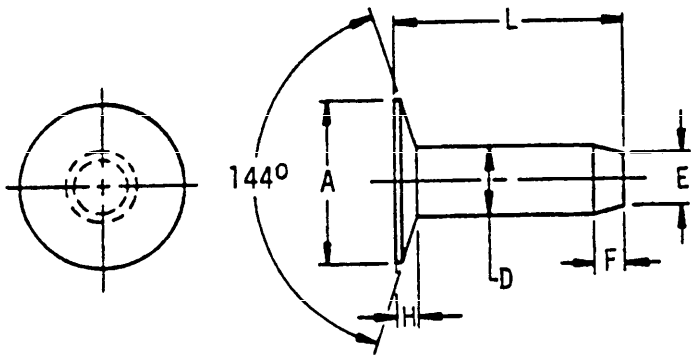

Material	Protective finish	Shear strength (psi) min
Copper	None	24,000

TABLE I. Rivet configuration dash numbers.

D	A	E	F	H	L Length	MS35745 Dash number
.165	.455-.481	.135	.094	.072-.054	.375 .500 .625 .750 .875 1.000	-6 -7 -8 -9 -10 -11
.134	.395-.417	.109	.094	.047-.065	.375 .500 .625 .750 .875 1.000	-12 -13 -14 -15 -16 -17
.109	.333-.353	.083	.078	.040-.054	.375 .500 .625 .750 .875 1.000	-18 -19 -20 -21 -22 -23

THIS DOCUMENT PROVIDED BY THE ABBOTT AEROSPACE
TECHNICAL LIBRARY
ABBOTTAEROSPACE.COM
Downloaded from http://www.everyspec.com

THIS DOCUMENT PROVIDED BY THE ABBOTT AEROSPACE
Downloaded from http://www.everyspec.com
TECHNICAL LIBRARY
ABBOTTAEROSPACE.COM

SECTION 708

RIVET, SOLID, BUTTON HEAD. STEEL

APPLICABLE DOCUMENT: MS51829

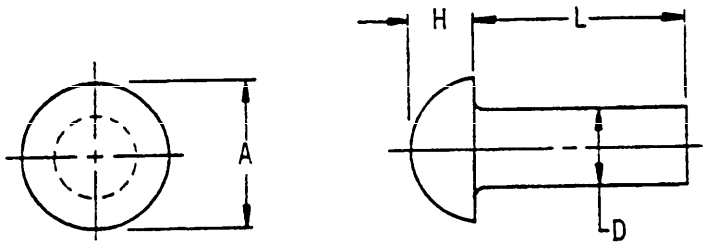

Material	Protective finish	Shear strength (psi) min
Carbon steel grade M	None	Not specified

TABLE I. Rivet configuration dash numbers.

D	A	H	L Length	MS51829 Dash number
.500	.875	.375-.406	.500	-1
			.562	-2
			.625	-3
			.688	-4
			.750	-5
			.812	-6
			.875	-7
			.938	-8
			1.000	-9
			1.125	-10
			1.250	-11
.625	1.094	.469-.500	.625	-12
			.688	-13
			.750	-14
			.812	-15
			.875	-16
			.938	-17
			1.000	-18
			1.125	-19
			1.250	-20
			1.375	-21
			1.500	-22
			1.625	-23
			1.750	-24
			1.875	-25
			2.000	-26
			2.125	-27
			2.250	-28
			2.375	-29
			2.500	-30
			2.625	-31
			2.750	-32
			2.875	-33
			3.000	-34

D	A	H	L Length	MS51829 Dash number
.750	1.312	.562-.593	1.000	-35
			1.125	-36
			1.250	-37
			1.375	-38
			1.500	-39
			1.625	-40
			1.750	-41
			1.875	-42
			2.000	-43
			2.125	-44
			2.250	-45
			2.375	-46
			2.500	-47
			2.625	-48
			2.750	-49
			2.875	-50
			3.000	-51
.875	1.531	.656-.687	1.250	-60
			1.375	-61
			1.500	-62
			1.625	-63
			1.750	-64
			1.875	-65
			2.000	-66
			2.125	-67
			2.250	-68
			2.375	-69
			2.500	-70
			2.625	-71
			2.750	-72
			2.875	-73
			3.000	-74

THIS DOCUMENT PROVIDED BY THE ABBOTT AEROSPACE
TECHNICAL LIBRARY
ABBOTTAEROSPACE.COM
Downloaded from http://www.everyspec.com

THIS DOCUMENT PROVIDED BY THE ABBOTT AEROSPACE
Downloaded from http://www.everyspec.com
TECHNICAL LIBRARY
ABBOTTAEROSPACE.COM

SECTION 709

RIVET, SOLID-100° COUNTERSUNK HEAD CARBON STEEL, CORROSION-RESISTANT STEEL, MONEL

APPLICABLE DOCUMENT: MS20427

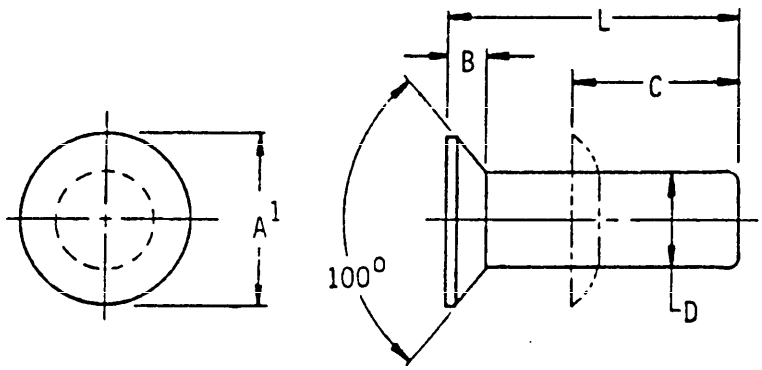

Material	Protective finish	Shear strength (psi) min
Carbon steel	Cadmium plate/black oxide	32,000
Cres	Not specified	65,000
Monel	None/cadmium plate	49,000

TABLE I. Rivet configuration dash numbers.

D	A1	B	C	L Length nom	MS20427 Dash number		
					Carbon steel	Cres	Monel
.062	.0898	.0317	.094	.125	-2C2	F2-2	M2-2
				.188	-2C3	F2-3	M2-3
				.250	-2C4	F2-4	M2-4
				.312	-2C5	F2-5	M2-5
				.375	-2C6	F2-6	M2-6
				.438	-2C7	F2-7	M2-7
				.500	-2C8	F2-8	M2-8
				.562	-2C9	F2-9	M2-9
				.625	-2C10	F2-10	M2-10
.084	.1548	.0418	.140	.188	-3C3	F3-3	M3-3
				.250	-3C4	F3-4	M3-4
				.312	-3C5	F3-5	M3-5
				.375	-3C6	F3-6	M3-6
				.438	-3C7	F3-7	M3-7
				.500	-3C8	F3-8	M3-8
				.562	-3C9	F3-9	M3-9
				.625	-3C10	F3-10	M3-10
				.750	-3C12	F3-12	M3-12
				.875	-3C14	F3-14	M3-14
				1.000	-3C16	F3-16	M3-16

THIS DOCUMENT PROVIDED BY THE ABBOTT AEROSPACE
Downloaded from http://www.everyspec.com
TECHNICAL LIBRARY
ABBOTTAEROSPACE.COM

TABLE I. Rivet configuration dash numbers. - Continued

D	A[1]	B	C	L Length	MS20427 Dash number		
					Carbon steel	Cres	Monel
.125	.2006	.0483	.187	.250	-4C4	F4-4	M4-4
				.312	-4C5	F4-5	M4-5
				.375	-4C6	F4-6	M4-6
				.438	-4C7	F4-7	M4-7
				.500	-4C8	F4-8	M4-8
				.562	-4C9	F4-9	M4-9
				.625	-4C10	F4-10	M4-10
				.750	-4C12	F4-12	M4-12
				.875	-4C14	F4-14	M4-14
				1.000	-4C16	F4-16	M4-16
				1.125	-4C18	F4-18	M4-18
				1.250	-4C20	F4-20	M4-20
				1.375	-4C22	F4-22	M4-22
				1.500	-4C24	F4-24	M4-24
				1.750	-4C28	F4-28	M4-28
.156	.2566	.0614	.234	.312	-5C5	F5-5	M5-5
				.375	-5C6	F5-6	M5-6
				.438	-5C7	F5-7	M5-7
				.500	-5C8	F5-8	M5-8
				.562	-5C9	F5-9	M5-9
				.625	-5C10	F5-10	M5-10
				.688	—	—	M5-11
				.750	-5C12	F5-12	M5-12
				.875	-5C14	F5-14	M5-14
				1.000	-5C16	F5-16	M5-16
				1.125	-5C18	F5-18	M5-18
				1.250	-5C20	F5-20	M5-20
				1.375	-5C22	F5-22	M5-22
				1.500	-5C24	F5-24	M5-24
				1.750	-5C28	F5-28	M5-28
				2.000	-5C32	F5-32	M5-32

THIS DOCUMENT PROVIDED BY THE ABBOTT AEROSPACE
TECHNICAL LIBRARY
ABBOTTAEROSPACE.COM
Downloaded from http://www.everyspec.com

TABLE I. Rivet configuration dash numbers. - Continued

D	A[1]	B	C	L Length	MS20427 Dash number		
					Carbon steel	Cres	Monel
.188	.3234	.0769	.281	.375	-6C6	F6-6	M6-6
				.438	-6C7	F6-7	M6-7
				.500	-6C8	F6-8	M6-8
				.562	-6C9	F6-9	M6-9
				.625	-6C10	F6-10	M6-10
				.750	-6C12	F6-12	M6-12
				.875	-6C14	F6-14	M6-14
				1.000	-6C16	F6-16	M6-16
				1.125	-6C18	F6-18	M6-18
				1.250	-6C20	F6-20	M6-20
				1.375	-6C22	F6-22	M6-22
				1.500	-6C24	F6-24	M6-24
				1.750	-6C28	F6-28	M6-28
				2.000	-6C32	F6-32	M6-32
				2.500	-6C40	F6-40	M6-40
				3.000	-6C48	F6-48	M6-48
.250	.4412	.1034	.375	.500	-8C8	F8-8	M8-8
				.562	-8C9	F8-9	M8-9
				.625	-8C10	F8-10	M8-10
				.750	-8C12	F8-12	M8-12
				.875	-8C14	F8-14	M8-14
				1.000	-8C16	F8-16	M8-16
				1.125	-8C18	F8-18	M8-18
				1.250	-8C20	F8-20	M8-20
				1.375	-8C22	F8-22	M8-22
				1.500	-8C24	F8-24	M8-24
				1.750	-8C28	F8-28	M8-28
				2.000	-8C32	F8-32	M8-32
				2.500	-8C40	F8-40	M8-40
				3.000	-8C48	F8-48	M8-48

THIS DOCUMENT PROVIDED BY THE ABBOTT AEROSPACE
TECHNICAL LIBRARY
ABBOTTAEROSPACE.COM
Downloaded from http://www.everyspec.com

THIS DOCUMENT PROVIDED BY ABBOTT AEROSPACE
Downloaded from http://www.everyspec.com
TECHNICAL LIBRARY
ABBOTTAEROSPACE.COM

SECTION 710

RIVET, SOLID, COUNTERSUNK 100°, PRECISION HEAD, ALUMINUM AND ALUMINUM ALLOY

APPLICABLE DOCUMENT: MS20426

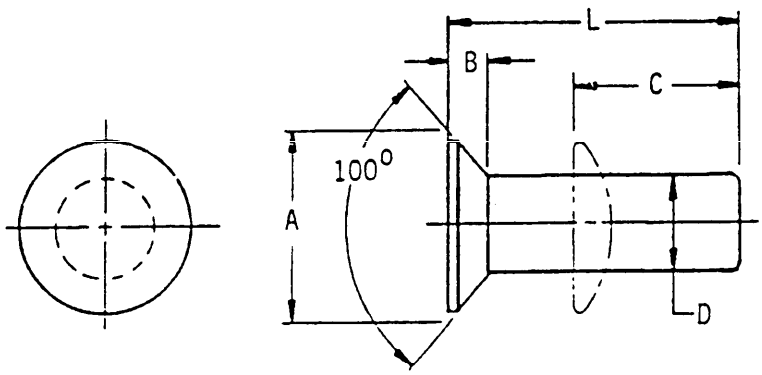

Material		Protective finish	Shear strength (psi) min
Aluminum	1100-F	None	Not specified
Aluminum alloy	5056-H32	Anodize	24,000
	2117-T4	Anodize	26,000
	2024-T4	Anodize	37,000
	2017-T4	Anodize	33,000

THIS DOCUMENT PROVIDED BY THE ABBOTT AEROSPACE
Downloaded from http://www.everyspec.com
TECHNICAL LIBRARY
ABBOTTAEROSPACE.COM

TABLE I. Rivet configuration dash numbers.

D	A	B	C	L Length	MS20426 Dash number				
					Aluminum	Aluminum alloy			
					1100-F	5056H32	2117-T4	2024-T4	2017-T4
.062	.114	.022	.094	.125	A2-2	B2-2	AD2-2	DD2-2	D2-2
				.188	A2-3	B2-3	AD2-3	DD2-3	D2-3
				.250	A2-4	B2-4	AD2-4	DD2-4	D2-4
				.312	A2-5	B2-5	AD2-5	DD2-5	D2-5
				.375	A2-6	B2-6	AD2-6	DD2-6	D2-6
				.438	A2-7	B2-7	AD2-7	DD2-7	D2-7
				.500	A2-8	B2-8	AD2-8	DD2-8	D2-8
				.562	A2-9	B2-9	AD2-9	DD2-9	D2-9
				.625	A2-10	B2-10	AD2-10	DD2-10	D2-10
.094	.179	.036	.141	.188	A3-3	B3-3	AD3-3	DD3-3	D3-3
				.250	A3-4	B3-4	AD3-4	DD3-4	D3-4
				.312	A3-5	B3-5	AD3-5	DD3-5	D3-5
				.375	A3-6	B3-6	AD3-6	DD3-6	D3-6
				.438	A3-7	B3-7	AD3-7	DD3-7	D3-7
				.500	A3-8	B3-8	AD3-8	DD3-8	D3-8
				.562	A3-9	B3-9	AD3-9	DD3-9	D3-9
				.625	A3-10	B3-10	AD3-10	DD3-10	D3-10
				.750	A3-12	B3-12	AD3-12	DD3-12	D3-12
				.875	-	B3-14	AD3-14	-	D3-14
				1.000	-	B3-16	AD3-16	-	D3-16
				1.250	-	B3-20	AD3-20	-	-
				2.000	-	-	AD3-32	-	-
.125	.225	.042	.188	.250	A4-4	-	AD4-4	-	D4-4
				.312	A4-5	-	AD4-5	-	D4-5
				.344	-	-	AD4-5.5	-	-
				.375	A4-6	B4-6	AD4-6	-	D4-6
				.438	A4-7	B4-7	AD4-7	-	D4-7
				.500	A4-8	B4-8	AD4-8	DD4-8	D4-8
				.562	A4-9	B4-9	AD4-9	DD4-9	D4-9
				.625	A4-10	B4-10	AD4-10	DD4-10	D4-10
				.750	A4-12	B4-12	AD4-12	DD4-12	D4-12
				.812	-	-	AD4-13	-	-
				.875	A4-14	B4-14	AD4-14	DD4-14	D4-14
				1.000	A4-16	B4-16	AD4-16	DD4-16	D4-16
				1.125	A4-18	B4-18	AD4-18	-	D4-18
				1.250	A4-20	B4-20	AD4-20	-	D4-20

THIS DOCUMENT PROVIDED BY THE ABBOTT AEROSPACE
Downloaded from http://www.everyspec.com
TECHNICAL LIBRARY
ABBOTTAEROSPACE.COM

TABLE I. Rivet configuration dash numbers. - Continued

D	A	B	C	L Length	MS20426 Dash number				
					Aluminum	Aluminum alloy			
					1100-F	5056H32	2117-T4	2024-T4	2017-T4
.125	.225	.042	.188	1.375	A4-22	B4-22	AD4-22	-	D4-22
				1.500	A4-24	B4-24	AD4-24	-	D4-24
				1.750	A4-28	B4-28	AD4-28	-	D4-28
.156	.286	.055	.234	.312	A5-5	-	AD5-5	-	D5-5
				.375	A5-6	B5-6	AD5-6	DD5-6	D5-6
				.438	A5-7	B5-7	AD5-7	DD5-7	D5-7
				.500	A5-8	B5-8	AD5-8	DD5-8	D5-8
				.562	A5-9	B5-9	AD5-9	DD5-9	D5-9
				.625	A5-10	B5-10	AD5-10	DD5-10	D5-10
				.688	-	-	AD5-11	-	-
				.750	A5-12	B5-12	AD5-12	DD5-12	D5-12
				.875	A5-14	B5-14	AD5-14	DD5-14	D5-14
				1.000	A5-16	B5-16	AD5-16	DD5-16	D5-16
				1.125	A5-18	B5-18	AD5-18	DD5-18	D5-18
				1.250	A5-20	B5-20	AD5-20	-	D5-20
				1.375	A5-22	B5-22	AD5-22	-	D5-22
				1.500	A5-24	B5-24	AD5-24	-	D5-24
				1.750	A5-28	B5-28	AD5-28	-	D5-28
				2.000	A5-32	B5-32	AD5-32	-	D5-32
.187	.353	.070	.281	.312	-	-	AD6-5	-	-
				.375	A6-6	B6-6	AD6-6	DD6-6	D6-6
				.438	A6-7	B6-7	AD6-7	DD6-7	D6-7
				.500	A6-8	B6-8	AD6-8	DD6-8	D6-8
				.562	A6-9	B6-9	AD6-9	DD6-9	D6-9
				.625	A6-10	B6-10	AD6-10	DD6-10	D6-10
				.688	-	-	AD6-11	-	-
				.750	A6-12	B6-12	AD6-12	DD6-12	D6-12
				.875	A6-14	B6-14	AD6-14	DD6-14	D6-14
				.938	-	-	AD6-15	-	-
				1.000	A6-16	B6-16	AD6-16	DD6-16	D6-16
				1.125	A6-18	B6-18	AD6-18	DD6-18	D6-18
				1.250	A6-20	B6-20	AD6-20	DD6-20	D6-20
				1.375	A6-22	B6-22	AD6-22	DD6-22	D6-22
				1.500	A6-24	B6-24	AD6-24	DD6-24	D6-24
				1.750	A6-28	B6-28	AD6-28	DD6-28	D6-28
				2.000	A6-32	B6-32	AD6-32	DD6-32	D6-32
				2.500	A6-40	B6-40	AD6-40	DD6-40	D6-40
				3.000	A6-48	B6-48	AD6-48	DD6-48	D6-48

THIS DOCUMENT PROVIDED BY THE ABBOTT AEROSPACE
Downloaded from http://www.everyspec.com
TECHNICAL LIBRARY
ABBOTTAEROSPACE.COM

TABLE I. Rivet configuration dash numbers. - Continued

D	A	B	C	L Length	MS20426 Dash number				
					Aluminum	Aluminum alloy			
					1100-F	5056H32	2117-T4	2024-T4	2017-T4
.250	.476	.095	.375	.438	-	B8-7	AD8-7	-	D8-7
				.500	-	B8-8	AD8-8	-	D8-8
				.562	-	B8-9	AD8-9	-	D8-9
				.625	-	B8-10	AD8-10	-	D8-10
				.750	-	B8-12	AD8-12	-	D8-12
				.875	A8-14	B8-14	AD8-14	-	D8-14
				1.000	A8-16	B8-16	AD8-16	-	-
				1.125	A8-18	B8-18	AD8-18	-	-
				1.250	A8-20	B8-20	AD8-20	-	-
				1.375	A8-22	B8-22	AD8-22	-	-
				1.500	A8-24	B8-24	AD8-24	-	-
				1.750	A8-28	B8-28	AD8-28	-	-
				2.000	A8-32	B8-32	AD8-32	-	-
				2.125	-	-	AD8-34	-	-
				2.500	A8-40	B8-40	AD8-40	-	-
				3.000	A8-48	B8-48	AD8-48	-	-

THIS DOCUMENT PROVIDED BY THE ABBOTT AEROSPACE
Downloaded from http://www.everyspec.com
TECHNICAL LIBRARY
ABBOTTAEROSPACE.COM

SECTION 711

RIVET, SOLID-COUNTERSUNK HEAD BRASS OR COPPER

APPLICABLE DOCUMENT: MS51945

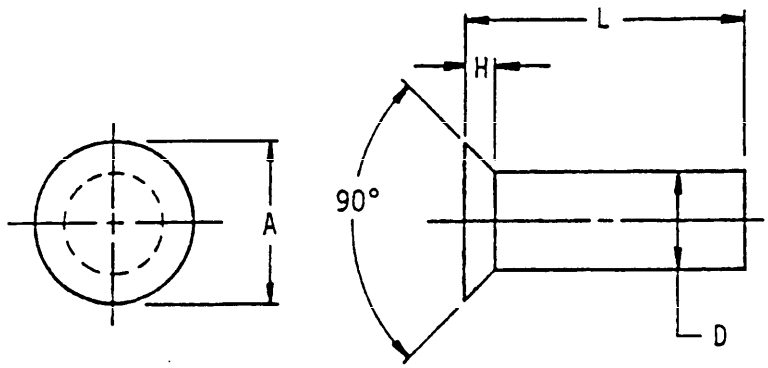

Material	Protective finish	Shear strength (psi) min
Brass	None	35,000
Copper	None	24,000

TABLE I. Rivet configuration dash numbers.

D	A	H	L Length	MS51945 Dash number	
				Brass	Copper
.094	.171-.176	.040	.250	-1	-
			.438	-4	-
			.625	-7	-
			.750	-8	-
.125	.227-.235	.053	.188	-	-115
			.250	-15	-116
			.312	-16	-
			.375	-17	-117
			.438	-18	-
			.500	-19	-118
			.625	-21	-119
			.750	-	-120
			.875	-23	-
			1.375	-25	-
			2.500	-	-127

THIS DOCUMENT PROVIDED BY THE ABBOTT AEROSPACE
Downloaded from http://www.everyspec.com
TECHNICAL LIBRARY
ABBOTTAEROSPACE.COM

TABLE I. Rivet configuration dash numbers. - Continued

D	A	H	L Length	MS51945 Dash number	
				Brass	Copper
.156	.284-.293	.066	.438	-32	-
			.562	-34	-
.188	.340-.351	.079	.250	-	-142
			.312	-44	-
			.375	-	-143
			.500	-47	-144
			.625	-49	-145
			.750	-50	-146
			.875	-	-147
			1.000	-	-148
			1.250	-	-149
			1.375	-53	-
			1.750	-	-151
			2.000	-54	-
			2.250	-55	-
			3.000	-56	-
.250	.455-.469	.106	.500	-	-157
			.625	-	-158
			.750	-63	-159
			.875	-	-160
			1.000	-65	-161
			1.250	-	-162
			1.500	-	-163
			1.750	-	-164
			2.000	-	-165
.312	.569-.588	.133	.750	-	-172
			.875	-	-173
			1.000	-	-174
			1.250	-	-175
			1.500	-	-176
			1.750	-	-177
			2.000	-	-178
.375	.682-.704	.159	1.000	-	-187
			1.250	-	-188
			1.500	-	-189
			1.750	-	-190

THIS DOCUMENT PROVIDED BY THE ABBOTT AEROSPACE
Downloaded from http://www.everyspec.com
TECHNICAL LIBRARY
ABBOTTAEROSPACE.COM

SECTION 712

RIVET-SOLID-100° FLUSH HEAD
A286 CORROSION RESISTANT STEEL

APPLICABLE DOCUMENT: NAS1199

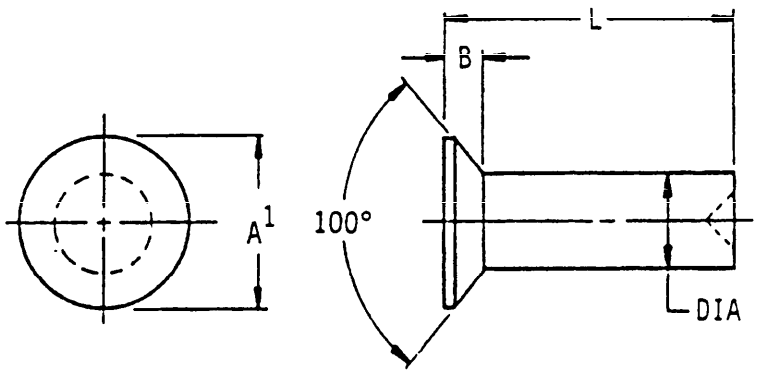

Material	Protective finish	Shear strength (psi) min
Cres A286	Passivate	90,000

TABLE I. Rivet configuration dash numbers.

Dia	A^1	B	L Length	NAS1199 Dash No.
.062	.090	.032	.125	-2-2
			.188	-2-3
			.250	-2-4
			.312	-2-5
			.375	-2-6
			.438	-2-7
			.500	-2-8
			.563	-2-9

THIS DOCUMENT PROVIDED BY THE ABBOTT AEROSPACE
TECHNICAL LIBRARY
ABBOTTAEROSPACE.COM
Downloaded from http://www.everyspec.com

TABLE I. Rivet configuration dash numbers. - Continued

Dia	A[1]	B	L Length	NAS1199 Dash No.
.094	.155	.042	.188	-3-3
			.250	-3-4
			.312	-3-5
			.375	-3-6
			.438	-3-7
			.500	-3-8
			.563	-3-9
			.625	-3-10
			.688	-3-11
			.750	-3-12
.125	.200	.049	.250	-4-4
			.312	-4-5
			.375	-4-6
			.438	-4-7
			.500	-4-8
			.563	-4-9
			.625	-4-10
			.688	-4-11
			.750	-4-12
			.813	-4-13
			.875	-4-14
			.938	-4-15
			1.000	-4-16
			1.125	-4-18
			1.250	-4-20
.156	.257	.061	.250	-5-4
			.312	-5-5
			.375	-5-6
			.438	-5-7
			.500	-5-8
			.563	-5-9
			.625	-5-10
			.688	-5-11
			.750	-5-12
			.813	-5-13
			.875	-5-14
			.938	-5-15
			1.000	-5-16
			1.125	-5-18
			1.250	-5-20

THIS DOCUMENT PROVIDED BY THE ABBOTT AEROSPACE
Downloaded from http://www.everyspec.com
TECHNICAL LIBRARY
ABBOTTAEROSPACE.COM

TABLE I. Rivet configuration dash numbers. - Continued

Dia	A[1]	B	L Length	NAS1199 Dash no.
.187	.441	.103	.375	-6-6
			.438	-6-7
			.500	-6-8
			.563	-6-9
			.625	-6-10
			.688	-6-11
			.750	-6-12
			.813	-6-13
			.875	-6-14
			.938	-6-15
			1.000	-6-16
			1.125	-6-18
			1.250	-6-20
.250	.441	.103	.375	-8-6
			.438	-8-7
			.500	-8-8
			.563	-8-9
			.625	-8-10
			.688	-8-11
			.750	-8-12
			.813	-8-13
			.875	-8-14
			.938	-8-15
			1.000	-8-16
			1.125	-8-18
			1.250	-8-20

NOTE: Suggested shank length protrusion 1-1/4 to 1-1/3 times rivet diameter.

THIS DOCUMENT PROVIDED BY THE ABBOTT AEROSPACE
TECHNICAL LIBRARY
ABBOTTAEROSPACE.COM
Downloaded from http://www.everyspec.com

THIS DOCUMENT PROVIDED BY THE ABBOTT AEROSPACE
Downloaded from http://www.everyspec.com
TECHNICAL LIBRARY
ABBOTTAEROSPACE.COM

SECTION 713

RIVET, SOLID, 100° FLUSH HEAD, AMS7229

APPLICABLE DOCUMENT: AN123451 THRU AN123600

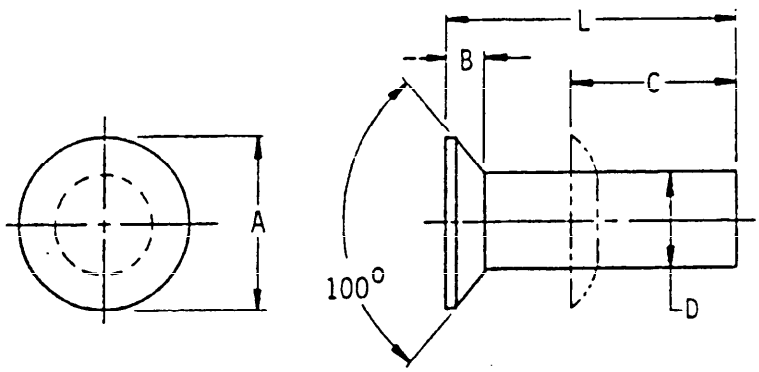

Material	Protective finish	Shear strength (psi) min
Cres 18Cr-11Ni	Not Specified	Not Specified

TABLE I. Rivet configuration part numbers.

D	A	B	C	L	Part no.
.062	.105	.022	.112	.219	AN123461
				.250	AN123453
				.281	AN123462
				.312	AN123454
				.344	AN123463
				.375	AN123455
				.406	AN123464
				.438	AN123456
				.469	AN123465
				.500	AN123457
				.531	AN123466
				.562	AN123458
				.594	AN123467
				.625	AN123459

THIS DOCUMENT PROVIDED BY THE ABBOTT AEROSPACE
TECHNICAL LIBRARY
ABBOTTAEROSPACE.COM
Downloaded from http://www.everyspec.com

TABLE I. Rivet configuration part numbers. - Continued

D	A	B	C	L	Part no.
.094	.170	.036	.169	.281	AN123480
				.312	AN123470
				.344	AN123481
				.375	AN123471
				.406	AN123482
				.438	AN123472
				.469	AN123483
				.500	AN123473
				.531	AN123484
				.562	AN123474
				.594	AN123485
				.625	AN123475
				.656	AN123499
				.688	AN123500
				.719	AN123501
.125	.216	.042	.225	.344	AN123533
				.375	AN123487
				.406	AN123534
				.438	AN123488
				.469	AN123535
				.500	AN123489
				.531	AN123536
				.562	AN123490
				.594	AN123547
				.625	AN123491
				.656	AN123548
				.688	AN123549
				.719	AN123560
.156	.278	.055	.281	.406	AN123585
				.438	AN123504
				.469	AN123586
				.500	AN123505
				.531	AN123587
				.562	AN123506
				.594	AN123588
				.625	AN123507
				.688	AN123590
				.719	AN123591
.188	.344	.070	.338	.500	AN123521
				.562	AN123522
				.625	AN123523

THIS DOCUMENT PROVIDED BY THE ABBOTT AEROSPACE
Downloaded from http://www.everyspec.com
TECHNICAL LIBRARY
ABBOTTAEROSPACE.COM

SECTION 714

RIVET, SOLID, 100° FLUSH HEAD, AMS7232

APPLICABLE DOCUMENT: AN123601 THRU AN123750

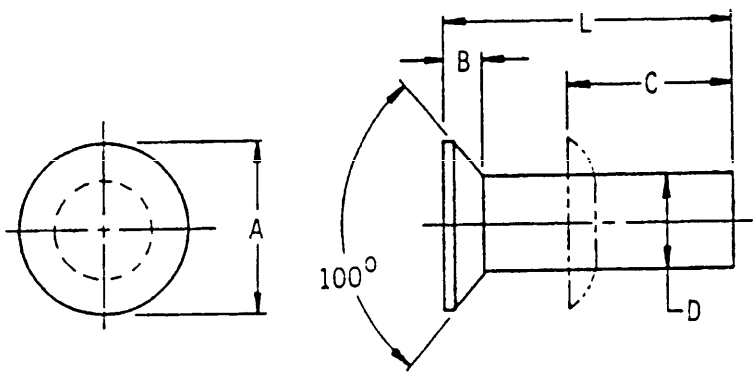

Material	Protective finish	Shear strength (psi) min
Cres 15.5Cr-11Ni	Not Specified	Not Specified

TABLE I. Rivet configuration part numbers.

D	A	B	C	L Length	Part no.
.062	.105	.022	.112	.188	AN123602
				.219	AN123611
				.250	AN123603
				.281	AN123612
				.312	AN123604
				.344	AN123613
				.375	AN123605
				.406	AN123614
				.438	AN123606
				.469	AN123615
				.500	AN123607
				.531	AN123616
				.562	AN123608
				.594	AN123617
				.625	AN123609

THIS DOCUMENT PROVIDED BY THE ABBOTT AEROSPACE
Downloaded from http://www.everyspec.com
TECHNICAL LIBRARY
ABBOTTAEROSPACE.COM

TABLE I. Rivet configuration part numbers. - Continued

D	A	B	C	L Length	Part no.
.094	.170	.036	.169	.250	AN123619
				.281	AN123630
				.312	AN213620
				.344	AN123631
				.375	AN123621
				.406	AN123632
				.438	AN123622
				.469	AN123633
				.500	AN123623
				.531	AN123634
				.562	AN123624
				.594	AN123635
				.625	AN123625
				.656	AN123649
				.688	AN123650
				.719	AN123651
.125	.216	.042	.225	.312	AN123636
				.344	AN123683
				.375	AN123637
				.406	AN123684
				.438	AN123638
				.469	AN123685
				.500	AN123639
				.531	AN123686
				.562	AN123640
				.594	AN123697
				.625	AN123641
				.656	AN123698
				.688	AN123699
				.719	AN123700
.156	.278	.055	.281	.406	AN123735
				.438	AN123654
				.469	AN123736
				.500	AN123655
				.531	AN123737
				.562	AN123656
				.594	AN123738
				.625	AN123657
				.656	AN123739
				.688	AN123740
				.719	AN123741
.188	.344	.070	.338	.438	AN123670
				.500	AN123671
				.562	AN123672
				.625	AN123673

THIS DOCUMENT PROVIDED BY THE ABBOTT AEROSPACE
Downloaded from http://www.everyspec.com
TECHNICAL LIBRARY
ABBOTTAEROSPACE.COM

SECTION 715

RIVET, SOLID-100° FLUSH HEAD, AMS7233

APPLICABLE DOCUMENT: MS9318

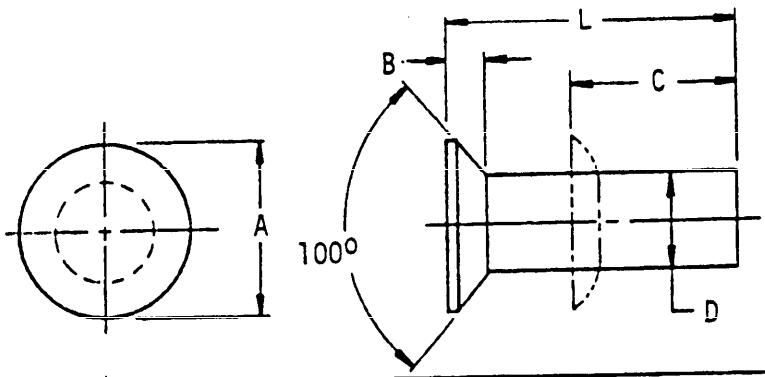

Material	Protective finish	Shear strength (psi) min
Nickel copper alloy 67Ni-30Cr	Not Specified	Not Specified

TABLE I. Rivet configuration dash numbers.

D	A	B	C	L Length	MS9318 Dash no.
.062	.099 - .107	.022	.094	.156	-003
				.188	-004
				.219	-005
				.250	-006
				.281	-007
				.312	-008
				.344	-009
.094	.164 - .172	.036	.141	.250	-052
				.281	-053
				.312	-054
				.344	-055
				.375	-056
				.406	-057
				.438	-058
				.469	-059
				.500	-060
				.531	-061
				.562	-062
				.594	-063
				.625	-064
				.658	-065
				.688	-066
				.719	-067

THIS DOCUMENT PROVIDED BY THE ABBOTT AEROSPACE
Downloaded from http://www.everyspec.com
TECHNICAL LIBRARY
ABBOTTAEROSPACE.COM

TABLE I. Rivet configuration dash numbers. - Continued

D	A	B	C	L Length	MS9318 Dash no.
.125	.210 - .218	.042	.188	.281	-099
				.312	-100
				.344	-101
				.375	-102
				.406	-103
				.438	-104
				.469	-105
				.500	-106
				.531	-107
				.562	-108
				.594	-109
.156	.272 - .280	.055	.234	.344	-147
				.375	-148
				.406	-149
				.438	-150
				.469	-151
				.500	-152
				.531	-153
				.562	-154
				.594	-155
.188	.337 - .347	.070	.281	.406	-195
				.438	-196
				.469	-197
				.500	-198
				.531	-199
				.562	-200
				.594	-201

THIS DOCUMENT PROVIDED BY THE ABBOTT AEROSPACE
Downloaded from http://www.everyspec.com
TECHNICAL LIBRARY
ABBOTTAEROSPACE.COM

SECTION 716

RIVET, SOLID-100° FLUSH HEAD, AMS7235

APPLICABLE DOCUMENT: MS9460

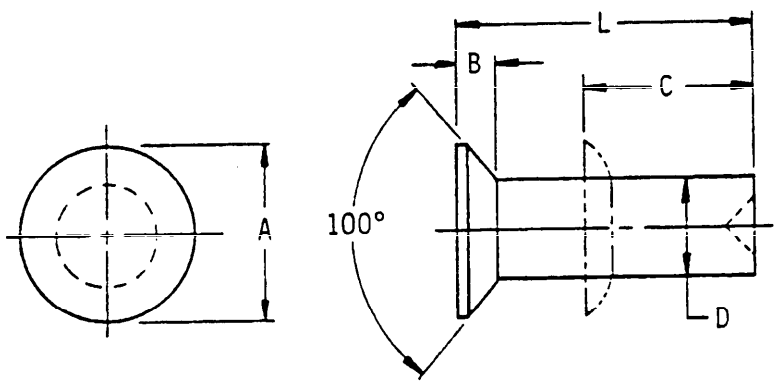

Material	Protective finish	Shear strength (psi) min
Cres 15Cr-26Ni	None	90,000

TABLE I. Rivet configuration dash numbers.

D	A	B	C	L Length	MS9460 Dash no.
.094	.164 - .172	.036	.141	.250	-052
				.281	-053
				.312	-054
				.344	-055
				.375	-056
				.406	-057
				.438	-058
				.469	-059

THIS DOCUMENT PROVIDED BY THE ABBOTT AEROSPACE
TECHNICAL LIBRARY
ABBOTTAEROSPACE.COM
Downloaded from http://www.everyspec.com

TABLE I. Rivet configuration dash numbers.- Continued

D	A	B	C	L Length	MS9460 Dash no.
.125	.210 - .218	.042	.188	.312	-100
				.344	-101
				.375	-102
				.406	-103
				.438	-104
				.469	-105
				.500	-106
				.531	-107
				.562	-108
				.594	-109
				.625	-110
				.656	-111
				.688	-112
				.719	-113
.156	.272 - .280	.055	.234	.375	-148
				.406	-149
				.438	-150
				.469	-151
				.500	-152
				.531	-153
				.562	-154
				.594	-155
				.625	-156
				.656	-157
				.688	-158
				.719	-159
.188	.337 - .347	.070	.281	.375	-194
				.406	-195
				.438	-196
				.469	-197
				.500	-198
				.531	-199
				.562	-200
				.594	-201
				.625	-202
				.656	-203
				.688	-204
				.719	-205

THIS DOCUMENT PROVIDED BY THE ABBOTT AEROSPACE
Downloaded from http://www.everyspec.com
TECHNICAL LIBRARY
ABBOTTAEROSPACE.COM

SECTION 717

RIVET, SOLID, 100° FLUSH SHEAR HEAD A286 CORROSION RESISTANT STEEL AND MONEL

APPLICABLE DOCUMENT: NAS1200

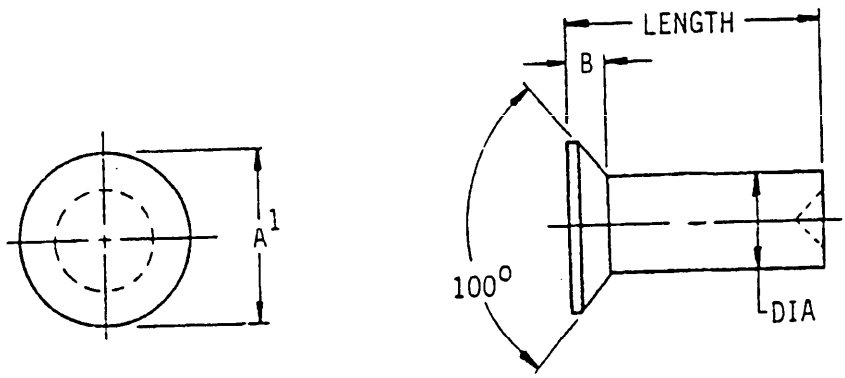

Material	Protective finish	Shear strength (psi) min
Cres A286	Passivate	90,000
Nickel copper alloy (Monel)	None or cadmium plate	49,000

TABLE I. Rivet configuration part numbers.

Dia	A1 Absolute min dia	B (Ref)	Basic part number
.094	.1260	.021	NAS1200-3
.125	.1739	.029	NAS1200-4
.156	.2251	.037	NAS1200-5
.187	.2749	.046	NAS1200-6
.250	.3710	.060	NAS1200-8

THIS DOCUMENT PROVIDED BY THE ABBOTT AEROSPACE
Downloaded from http://www.everyspec.com
TECHNICAL LIBRARY
ABBOTTAEROSPACE.COM

TABLE II. Rivet configuration dash numbers.

Dia	Length and dash number									
	.188	.250	.312	.375	.438	.500	.563	.625	.688	.750
.094	-3	-4	-5	-6	-7	-8	-9	-10	-11	-12
.125	--	-4	-5	-6	-7	-8	-9	-10	-11	-12
.156	--	-4	-5	-6	-7	-8	-9	-10	-11	-12
.187	--	--	-5	-6	-7	-8	-9	-10	-11	-12
.250	--	--	--	--	-7	-8	-9	-10	-11	-12

Dia	Length and dash number			
	.813	.875	.938	1.000
.094	-13	-14	-15	-16
.125	-13	-14	-15	-16
.156	-13	-14	-15	-16
.187	-13	-14	-15	-16
.250	-13	-14	-15	-16

NOTE: Suggested shank length protrusion 1-1/4 to 1-1/3 times rivet dia.

THIS DOCUMENT PROVIDED BY THE ABBOTT AEROSPACE
Downloaded from http://www.everyspec.com
TECHNICAL LIBRARY
ABBOTTAEROSPACE.COM

SECTION 718

RIVET, SOLID-100° FLUSH SHEAR HEAD, ALUMINUM ALLOY

APPLICABLE DOCUMENT: NAS1097

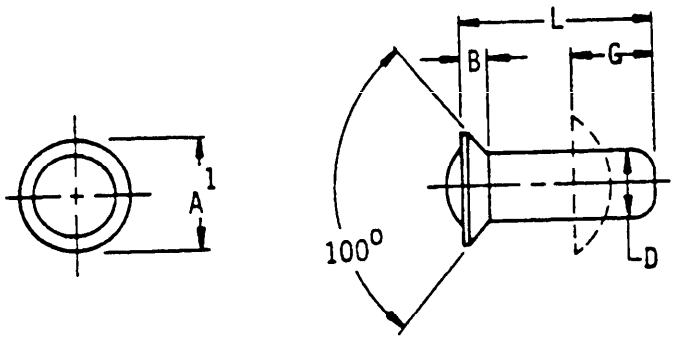

Material		Protective finish	Shear strength (psi) min
Aluminum alloy	2117-T4	Anodize	26,000
	5056-H32	Anodize	24,000
	2017-T4	Anodize	33,000
	2024-T4	Anodize	37,000

THIS DOCUMENT PROVIDED BY THE ABBOTT AEROSPACE
TECHNICAL LIBRARY
ABBOTTAEROSPACE.COM
Downloaded from http://www.everyspec.com

TABLE I. Rivet configuration dash numbers.

D	A[1]	B	G	L Length	NAS1097 Dash number			
					5056H32	2117-T4	2024-T4	2017-T4
.094	.126	.021	.141	.250	B-3-4	AD-3-4	DD-3-4	D-3-4
				.312	B-3-5	AD-3-5	DD-3-5	D-3-5
				.375	B-3-6	AD-3-6	DD-3-6	D-3-6
				.438	B-3-7	AD-3-7	DD-3-7	D-3-7
				.500	B-3-8	AD-3-8	DD-3-8	D-3-8
				.562	B-3-9	AD-3-9	DD-3-9	D-3-9
				.625	B-3-10	AD-3-10	DD-3-10	D-3-10
				.750	B-3-12	AD-3-12	DD-3-12	D-3-12
				.875	B-3-14	AD-3-14	DD-3-14	D-3-14
				1.000	B-3-16	AD-3-16	DD-3-16	D-3-16
.125	.174	.029	.188	.250	B-4-4	AD-4-4	DD-4-4	D-4-4
				.312	B-4-5	AD-4-5	DD-4-5	D-4-5
				.375	B-4-6	AD-4-6	DD-4-6	D-4-6
				.438	B-4-7	AD-4-7	DD-4-7	D-4-7
				.500	B-4-8	AD-4-8	DD-4-8	D-4-8
				.562	B-4-9	AD-4-9	DD-4-9	D-4-9
				.625	B-4-10	AD-4-10	DD-4-10	D-4-10
				.750	B-4-12	AD-4-12	DD-4-12	D-4-12
				.875	B-4-14	AD-4-14	DD-4-14	D-4-14
				1.000	B-4-16	AD-4-16	DD-4-16	D-4-16
				1.125	B-4-18	AD-4-18	DD-4-18	D-4-18
				1.250	B-4-20	AD-4-20	DD-4-20	D-4-20
				1.375	B-4-22	AD-4-22	DD-4-22	D-4-22
				1.500	B-4-24	AD-4-24	DD-4-24	D-4-24
				1.750	B-4-28	AD-4-28	DD-4-28	D-4-28
.156	.225	.037	.234	.312	B-5-5	AD-5-5	DD-5-5	D-5-5
				.375	B-5-6	AD-5-6	DD-5-6	D-5-6
				.438	B-5-7	AD-5-7	DD-5-7	D-5-7
				.500	B-5-8	AD-5-8	DD-5-8	D-5-8
				.562	B-5-9	AD-5-9	DD-5-9	D-5-9
				.625	B-5-10	AD-5-10	DD-5-10	D-5-10
				.750	B-5-12	AD-5-12	DD-5-12	D-5-12
				.875	B-5-14	AD-5-14	DD-5-14	D-5-14
				1.000	B-5-16	AD-5-16	DD-5-16	D-5-16
				1.125	B-5-18	AD-5-18	DD-5-18	D-5-18
				1.375	B-5-20	AD-5-20	DD-5-20	D-5-20
				1.500	B-5-24	AD-5-24	DD-5-24	D-5-24
				1.750	B-5-28	AD-5-28	DD-5-28	D-5-28
				2.000	B-5-32	AD-5-32	DD-5-32	D-5-32

THIS DOCUMENT PROVIDED BY THE ABBOTT AEROSPACE
TECHNICAL LIBRARY
ABBOTTAEROSPACE.COM
Downloaded from http://www.everyspec.com

TABLE I. Rivet configuration dash numbers. - Continued

D	A[1]	B	G	L Length	NAS1097 Dash number			
					5056H32	2117-T4	2024-T4	2017-T4
.188	.275	.046	.281	.375	B-6-6	AD-6-6	DD-6-6	D-6-6
				.438	B-6-7	AD-6-7	DD-6-7	D-6-7
				.500	B-6-8	AD-6-8	DD-6-8	D-6-8
				.562	B-6-9	AD-6-9	DD-6-9	D-6-9
				.625	B-6-10	AD-6-10	DD-6-10	D-6-10
				.750	B-6-12	AD-6-12	DD-6-12	D-6-12
				.875	B-6-14	AD-6-14	DD-6-14	D-6-14
				1.000	B-6-16	AD-6-16	DD-6-16	D-6-16
				1.125	B-6-18	AD-6-18	DD-6-18	D-6-18
				1.375	B-6-20	AD-6-20	DD-6-20	D-6-20
				1.500	B-6-24	AD-6-24	DD-6-24	D-6-24
				1.750	B-6-28	AD-6-28	DD-6-28	D-6-28
				2.000	B-6-32	AD-6-32	DD-6-32	D-6-32
				2.500	B-6-40	AD-6-40	DD-6-40	D-6-40
				3.000	B-6-48	AD-6-48	DD-6-48	D-6-48
.250	.371	.060	.375	.500	B-8-8	AD-8-8	DD-8-8	D-8-8
				.562	B-8-9	AD-8-9	DD-8-9	D-8-9
				.625	B-8-10	AD-8-10	DD-8-10	D-8-10
				.750	B-8-12	AD-8-12	DD-8-12	D-8-12
				.875	B-8-14	AD-8-14	DD-8-14	D-8-14
				1.000	B-8-16	AD-8-16	DD-8-16	D-8-16
				1.125	B-8-18	AD-8-18	DD-8-18	D-8-18
				1.250	B-8-20	AD-8-20	DD-8-20	D-8-20
				1.375	B-8-22	AD-8-22	DD-8-22	D-8-22
				1.500	B-8-24	AD-8-24	DD-8-24	D-8-24
				1.750	B-8-28	AD-8-28	DD-8-28	D-8-28
				2.000	B-8-32	AD-8-32	DD-8-32	D-8-32
				2.500	B-8-40	AD-8-40	DD-8-40	D-8-40
				3.000	B-8-48	AD-8-48	DD-8-48	D-8-48

THIS DOCUMENT PROVIDED BY THE ABBOTT AEROSPACE
TECHNICAL LIBRARY
ABBOTTAEROSPACE.COM
Downloaded from http://www.everyspec.com

THIS DOCUMENT PROVIDED BY THE ABBOTT AEROSPACE
Downloaded from http://www.everyspec.com
TECHNICAL LIBRARY
ABBOTTAEROSPACE.COM

SECTION 719

RIVET, SOLID-SMALL, COUNTERSUNK HEAD, STEEL ANNEALED

APPLICABLE DOCUMENT: MS35744

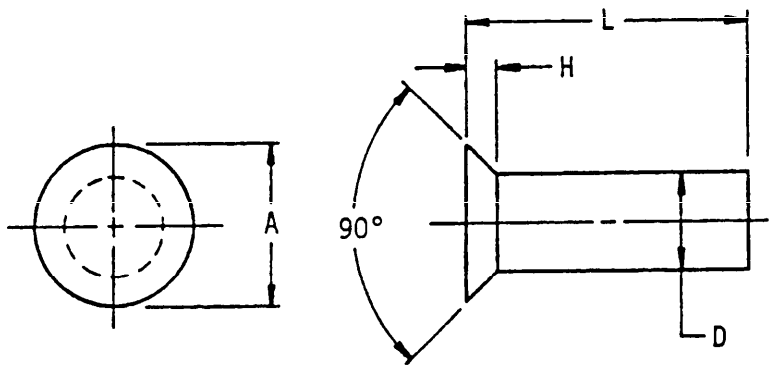

Material	Protective finish	Shear strength (psi) min
Carbon steel C1005 thru C1022	None	32,000

TABLE I. Rivet configuration dash numbers.

D	A	H	L Length	MS35744 Dash number
.125	.217-.235	.053	.375	-1
			.438	-2
			.500	-3
			.562	-4
			.625	-5
			.688	-6
			.750	-7
			.875	-8
			1.000	-9
			1.125	-10
			1.250	-11
			1.375	-12
			1.500	-13
			1.750	-14
			2.000	-15

THIS DOCUMENT PROVIDED BY THE ABBOTT AEROSPACE
Downloaded from http://www.everyspec.com
TECHNICAL LIBRARY
ABBOTTAEROSPACE.COM

TABLE I. Rivet configuration dash numbers. - Continued

D	A	H	L Length	MS35744 Dash number
.188	.326-.351	.079	.375	-16
			..438	-17
			.500	-18
			.562	-19
			.625	-20
			.688	-21
			.750	-22
			.875	-23
			1.000	-24
			1.125	-25
			1.250	-26
			1.375	-27
			1.500	-28
			1.750	-29
			2.000	-30
.250	.437-.469	.106	.500	-31
			.562	-32
			.625	-33
			.688	-34
			.750	-35
			.875	-36
			1.000	-37
			1.125	-38
			1.250	-39
			1.375	-40
			1.500	-41
			1.750	-42
			2.000	-43

THIS DOCUMENT PROVIDED BY THE ABBOTT AEROSPACE
Downloaded from http://www.everyspec.com
TECHNICAL LIBRARY
ABBOTTAEROSPACE.COM

SECTION 720

RIVET, SOLID-SMALL, PAN HEAD, STEEL, ANNEALED

APPLICABLE DOCUMENT: MS35743

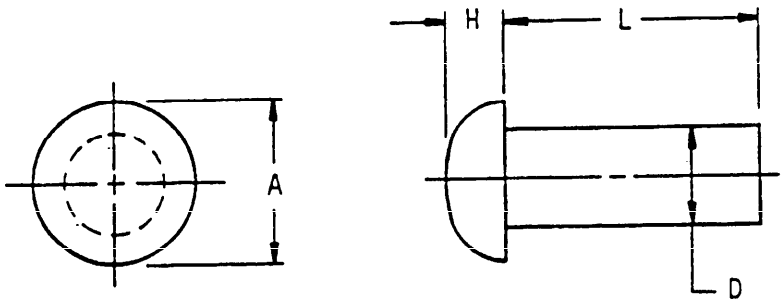

Material	Protective finish	Shear strength (psi) min
Carbon steel C1005 thru C1022	None	32,000

TABLE I. Rivet configuration dash numbers.

D	A	H	L Length	MS35743 Dash number
.125	205-.225	066-.078	.250	-1
			.312	-2
			.375	-3
			.438	-4
			.500	-5
			.562	-6
			.625	-7
			.750	-8
			.875	-9
			1.000	-10
			1.125	-11
			1.250	-12

THIS DOCUMENT PROVIDED BY THE ABBOTT AEROSPACE
Downloaded from http://www.everyspec.com
TECHNICAL LIBRARY
ABBOTTAEROSPACE.COM

TABLE I. Rivet configuration dash numbers. - Continued

D	A	H	L Length	MS35743 Dash number
.188	.308-.334	.100-.114	.250	-13
			.312	-14
			.375	-15
			.438	-16
			.500	-17
			.562	-18
			.625	-19
			.750	-20
			.875	-21
			1.000	-22
			1.125	-23
			1.250	-24
			1.375	-25
			1.500	-26
			1.625	-27
			1.750	-28
			2.000	-29
			2.250	-30
			2.500	-31
			2.750	-32
			3.000	-33
.250	.414-.444	.135-.151	.375	-34
			.438	-35
			.500	-36
			.562	-37
			.625	-38
			.750	-39
			.875	-40
			1.000	-41
			1.125	-42
			1.250	-43
			1.375	-44
			1.500	-45
			1.625	-46
			1.750	-47
			2.000	-48
			2.250	-49
			2.500	-50
			2.750	-51
			3.000	-52
			3.500	-53
			4.000	-54
.312	.518-.552	.169-.187	.625	-55
			.750	-56
			.875	-57
			1.000	-58
			1.125	-59
			1.250	-60
			1.375	-61
			1.500	-62
			1.625	-63
			1.750	-64
			2.000	-65
			2.250	-66
			2.500	-67
			2.750	-68
			3.000	-69
			3.500	-70
			4.000	-71

THIS DOCUMENT PROVIDED BY THE ABBOTT AEROSPACE
Downloaded from http://www.everyspec.com
TECHNICAL LIBRARY
ABBOTTAEROSPACE.COM

SECTION 721

RIVET, SOLID-TINNER'S

APPLICABLE DOCUMENT: MS51931

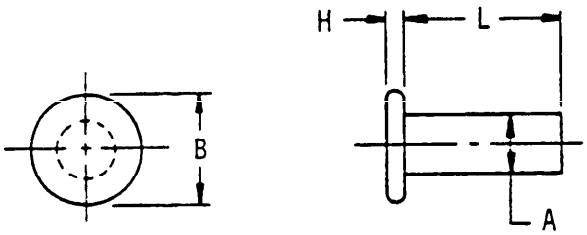

Material	Protective finish	Shear strength (psi) min
Carbon steel C1006 thru C1012	None or tinned	32,000

TABLE I. Rivet configuration dash numbers.

A	B	H	L Length	MS51931 Dash number	
				Uncoated	Tinned
.085-.091	.205-.225	.024-.036	.156	-1	-15
.101-.107	.245-.265	.025-.037	.188	-2	-16
.107-.113	.265-.285	.028-.040	.203	-3	-17
.126-.132	.294-.316	.034-.046	.234	-4	-18
.140-.146	.319-.341	.036-.050	.266	-5	-19
.144-.150	.289-.311	.055-.069	.281	-6	-20
.154-.163	.303-.329	.059-.073	.313	-7	-21
.170-.179	.342-.368	.062-.076	.344	-8	-22
.197-.206	.393-.419	.076-.090	.391	-9	-23
.218-.227	.445-.475	.085-.101	.438	-10	-24
.232-.241	.475-.505	.088-.104	.469	-11	-25
.251-.263	.498-.532	.090-.108	.500	-12	-26
.276-.288	.543-.577	.095-.113	.515	-13	-27
.292-.304	.563-.597	.110-.128	.531	-14	-28

THIS DOCUMENT PROVIDED BY THE ABBOTT AEROSPACE
Downloaded from http://www.everyspec.com
TECHNICAL LIBRARY
ABBOTTAEROSPACE.COM

THIS DOCUMENT PROVIDED BY THE ABBOTT AEROSPACE
Downloaded from http://www.everyspec.com
TECHNICAL LIBRARY
ABBOTTAEROSPACE.COM

SECTION 722

RIVET, SOLID-UNIVERSAL HEAD

APPLICABLE DOCUMENTS: MS20470, MS20613, MS20615

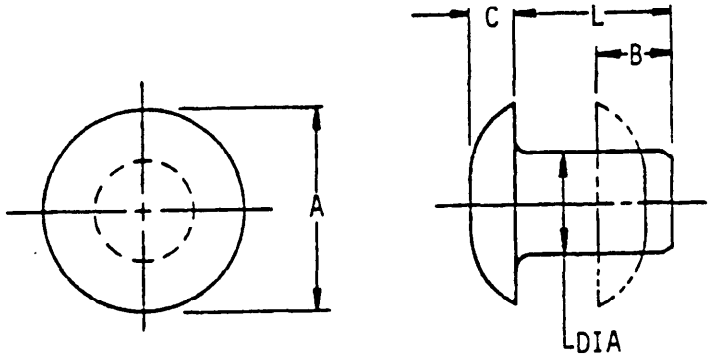

THIS DOCUMENT PROVIDED BY THE ABBOTT AEROSPACE
Downloaded from http://www.everyspec.com
TECHNICAL LIBRARY
ABBOTTAEROSPACE.COM

TABLE I. Part numbers.

Material					Aluminum 1100	Aluminum alloy 2117	Aluminum alloy 5056	Aluminum alloy 2017	Copper	Monel	Monel
Protective finish					None	Anodize			None	None	Cad. plate
Shear strength (psi min)					Not specified	26,000	24,000	33,000	17,000	49,000	
Dia	A	B	C	L Length	MS20470 dash numbers				MS20615 dash numbers		
.062	.125	.094	.027	.125	--	--	--	--	2CU2	2M2	2MP2
				.187	--	--	--	--	2CU3	2M3	2MP3
				.188	A2-3	AD2-3	--	--	--	--	--
				.250	A2-4	AD2-4	--	--	2CU4	2M4	2MP4
				.312	A2-5	AD2-5	--	--	2CU5	2M5	2MP5
				.375	A2-6	AD2-6	--	--	2CU6	2M6	2MP6
				.438	A2-7	AD2-7	--	--	2CU7	2M7	2MP7
				.500	A2-8	AD2-8	--	--	2CU8	2M8	2MP8
				.562	A2-9	AD2-9	--	--	--	2M9	2MP9
				.625	A2-10	AD2-10	--	--	--	--	--
				.750	A2-12	AD2-12	--	--	--	--	--
				.875	A2-14	AD2-14	--	--	--	--	--
				1.000	A2-16	AD2-16	--	--	--	--	--
				1.125	A2-18	AD2-18	--	--	--	--	--
				1.250	A2-20	AD2-20	--	--	--	--	--
.094	.187	.141	.040	.187	--	--	--	--	3CU3	3M3	3MP3
				.188	A3-3	AD3-3	--	D3-3	--	--	--
				.250	A3-4	AD3-4	--	D3-4	3CU4	3M4	3MP4
				.312	A3-5	AD3-5	--	D3-5	3CU5	3M5	3MP5
				.375	A3-6	AD3-6	--	D3-6	3CU6	3M6	3MP6
				.438	A3-7	AD3-7	--	D3-7	3CU7	3M7	3MP7
				.500	A3-8	AD3-8	--	D3-8	3CU8	3M8	3MP8
				.562	A3-9	AD3-9	--	D3-9	--	3M9	3MP9
				.625	A3-10	AD3-10	--	D3-10	3CU10	3M10	3MP10
				.688	--	--	--	--	--	3M11	3MP11
				.750	A3-12	AD3-12	--	D3-12	3CU12	3M12	3MP12
				.875	A3-14	AD3-14	--	D3-14	3CU14	--	--
				1.000	A3-16	AD3-16	--	D3-16	3CU16	--	--
				1.125	A3-18	AD3-18	--	D3-18	--	--	--
				1.250	A3-20	AD3-20	--	D3-20	--	--	--
				1.375	A3-22	AD3-22	--	D3-22	--	--	--

THIS DOCUMENT PROVIDED BY THE ABBOTT AEROSPACE
Downloaded from http://www.everyspec.com
TECHNICAL LIBRARY
ABBOTTAEROSPACE.COM

TABLE I. Part numbers. -Continued

Dia	A	B	C	L Length	MS20470 dash numbers				MS20615 dash numbers		
					Aluminum 1100	Aluminum alloy 2117	Aluminum alloy 5056	Aluminum alloy 2017	Copper	Monel	Monel Cad. plate
.125	.250	.188	.054	.218	--	AD4-3-5	B4-3-5	--	--	--	--
				.250	A4-4	AD4-4	B4-4	D4-4	4CU4	4M4	4MP4
				.281	--	AD4-4-5	B4-4-5	--	--	--	--
				.312	A4-5	AD4-5	B4-5	D4-5	4CU5	4M5	4MP5
				.375	A4-6	AD4-6	B4-6	D4-6	4CU6	4M6	4MP6
				.438	A4-7	AD4-7	B4-7	D4-7	4CU7	4M7	4MP7
				.500	A4-8	AD4-8	B4-8	D4-8	4CU8	4M8	4MP8
				.562	A4-9	AD4-9	B4-9	D4-9	--	4M9	4MP9
				.625	A4-10	AD4-10	B4-10	D4-10	4CU10	4M10	4MP10
				.687	--	AD4-11	B4-11	--	--	--	--
				.688	--	--	--	--	--	4M11	4MP11
				.750	A4-12	AD4-12	B4-12	D4-12	4CU12	4M12	4MP12
				.812	--	--	--	--	--	4M13	4MP13
				.875	A4-14	AD4-14	B4-14	D4-14	4CU14	4M14	4MP14
				.938	--	--	--	--	--	4M15	4MP15
				1.000	A4-16	AD4-16	B4-16	D4-16	4CU16	4M16	4MP16
				1.125	A4-18	AD4-18	B4-18	D4-18	--	4M18	4MP18
				1.250	A4-20	AD4-20	B4-20	D4-20	--	4M20	4MP20
				1.375	A4-22	AD4-22	B4-22	D4-22	--	--	--
				1.500	A4-24	AD4-24	B4-24	D4-24	--	--	--
.156	.312	.234	.067	.250	--	--	--	--	--	--	--
				.312	A5-5	AD5-5	B5-5	D5-5	--	5M5	5MP5
				.375	A5-6	AD5-6	B5-6	D5-6	5CU6	5M6	5MP6
				.428	A5-7	AD5-7	B5-7	D5-7	5CU7	5M7	5MP7
				.500	A5-8	AD5-8	B5-8	D5-8	5CU8	5M8	5MP8
				.562	A5-9	AD5-9	B5-9	D5-9	--	5M9	5MP9
				.625	A5-10	AD5-10	B5-10	D5-10	5CU10	5M10	5MP10
				.687	--	AD5-11	--	--	--	--	--
				.688	--	--	--	--	--	5M11	5MP11
				.750	A5-12	AD5-12	B5-12	D5-12	5CU12	5M12	5MP12
				.812	--	--	--	--	--	5M13	5MP13
				.875	A5-14	AD5-14	B5-14	D5-14	5CU14	5M14	5MP14
				.938	--	--	--	--	--	5M15	5MP15
				1.000	A5-16	AD5-16	B5-16	D5-16	5CU16	5M16	5MP16
				1.062	--	AD5-17	--	--	--	--	--
				1.125	A5-18	AD5-18	B5-18	D5-18	--	5M18	5MP18
				1.187	--	AD5-19	--	--	--	--	--
				1.250	A5-20	AD5-20	B5-20	D5-20	--	5M20	--
				1.375	A5-22	AD5-22	B5-22	D5-22	--	5M22	--
				1.500	A5-24	AD5-24	B5-24	D5-24	--	5M24	--
				1.750	A5-28	AD5-28	B5-28	D5-28	--	5M28	--
				2.000	--	--	--	--	--	5M32	--
.187	.375	.281	.080	.312	A6-5	AD6-5	B6-5	D6-5	--	6M5	--
				.375	A6-6	AD6-6	B6-6	D6-6	6CU6	6M6	--
				.438	A6-7	AD6-7	B6-7	D6-7	6CU7	6M7	--
				.500	A6-8	AD6-8	B6-8	D6-8	6CU8	6M8	--
				.562	A6-9	AD6-9	B6-9	D6-9	--	6M9	--
				.625	A6-10	AD6-10	B6-10	D6-10	6CU10	6M10	--
				.687	--	AD6-11	B6-11	--	--	--	--
				.688	--	--	--	--	--	6M11	--
				.750	A6-12	AD6-12	B6-12	D6-12	6CU12	6M12	--
				.812	--	--	--	--	--	6M13	--
				.875	A6-14	AD6-14	B6-14	D6-14	6CU14	6M14	--
				.938	--	--	--	--	--	6M15	--
				1.000	A6-16	AD6-16	B6-16	D6-16	6CU16	6M16	--
				1.125	A6-18	AD6-18	B6-18	D6-18	6CU18	6M18	--
				1.250	A6-20	AD6-20	B6-20	D6-20	6CU20	6M20	--
				1.375	A6-22	AD6-22	B6-22	D6-22	6CU22	6M22	--
				1.500	A6-24	AD6-24	B6-24	D6-24	6CU24	6M24	--
				1.750	A6-28	AD6-28	B6-28	D6-28	--	6M28	--
				2.000	A6-32	AD6-32	B6-32	D6-32	--	6M32	--
				2.250	-	AD6-36	--	--	--	--	--
				2.500	A6-40	AD6-40	B6-40	D6-40	--	--	--
				3.000	A6-48	AD6-48	B6-48	D6-48	--	--	--
.250	.500	.375	.107	.438	A8-7	AD8-7	B8-7	D8-7	8CU7	8M7	--
				.500	A8-8	AD8-8	B8-8	D8-8	8CU8	8M8	--
				.562	A8-9	AD8-9	B8-9	D8-9	8CU9	8M9	--
				.625	A8-10	AD8-10	B8-10	D8-10	8CU10	8M10	--
				.688	--	--	--	--	8CU11	8M11	--
				.750	A8-12	AD8-12	B8-12	D8-12	8CU12	8M12	--
				.812	--	--	--	--	8CU13	8M13	--
				.875	A8-14	AD8-14	B8-14	D8-14	8CU14	8M14	--
				.938	--	--	--	--	8CU15	8M15	--
				1.000	A8-16	AD8-16	B8-16	D8-16	8CU16	8M16	--
				1.125	A8-18	AD8-18	B8-18	D8-18	8CU18	8M18	--
				1.250	A8-20	AD8-20	B8-20	D8-20	8CU20	8M20	--
				1.375	A8-22	AD8-22	B8-22	D8-22	8CU22	8M22	--
				1.500	A8-24	AD8-24	B8-24	D8-24	8CU24	8M24	--
				1.750	A8-28	AD8-28	B8-28	D8-28	8CU28	8M28	--
				2.000	A8-32	AD8-32	B8-32	D8-32	8CU32	8M32	--
				2.500	A8-40	AD8-40	B8-40	D8-40	--	--	--
				3.000	A8-48	AD8-48	B8-48	D8-48	--	--	--
				3.500	A8-56	AD8-56	B8-56	D8-56	--	--	--

THIS DOCUMENT PROVIDED BY THE ABBOTT AEROSPACE
Downloaded from http://www.everyspec.com
TECHNICAL LIBRARY
ABBOTTAEROSPACE.COM

TABLE II. Part numbers.

Material					Carbon steel	Cres
Protective finish					Cadmium plate	Passivate
Shear strength (psi) min					25,000	65,000
Dia	A	B	C	L Length	MS20613 dash no.	
.062	.119 - .131	.094	.027 - .037	.125	-2P2	-202
				.188	-2P3	-203
				.250	-2P4	-204
				.312	-2P5	-205
				.375	-2P6	-206
				.438	-2P7	-207
				.500	-2P8	-208
.094	.178 - .196	.141	.040 - .050	.188	-3P3	-303
				.250	-3P4	-304
				.312	-3P5	-305
				.375	-3P6	-306
				.438	-3P7	-307
				.500	-3P8	-308
				.625	-3P10	-3010
				.750	-3P12	-3012
				.875	-3P14	-3014
				1.000	-3P16	-3016
.125	.238 - .262	.188	.054 - .064	.250	-4P4	-404
				.312	-4P5	-405
				.375	-4P6	-406
				.438	-4P7	-407
				.500	-4P8	-408
				.625	-4P10	-4010
				.750	-4P12	-4012
				.875	-4P14	-4014
				1.000	-4P16	-4016
				1.250	-4P20	-4020
				1.500	-4P24	-4024
.156	.296 - .328	.234	.067 - .077	.312	-5P5	-505
				.375	-5P6	-506
				.438	-5P7	-507
				.500	-5P8	-508
				.625	-5P10	-5010
				.750	-5P12	-5012
				.875	-5P14	-5014
				1.000	-5P16	-5016
				1.250	-5P20	-5020
				1.500	-5P24	-5024
				1.750	-5P28	-5028
				2.000	-5P32	-5032
.188	.356 - .394	.281	.080 - .090	.312	-6P5	-605
				.375	-6P6	-606
				.438	-6P7	-607
				.500	-6P8	-608
				.625	-6P10	-6010
				.750	-6P12	-6012
				.875	-6P14	-6014
				1.000	-6P16	-6016
				1.125	-6P18	-6018
				1.250	-6P20	-6020
				1.375	-6P22	-6022
				1.500	-6P24	-6024
				1.750	-6P28	-6028
				2.000	-6P32	-6032
.250	.475 - .525	.375	.107 - .117	.438	-8P7	-807
				.500	-8P8	-808
				.625	-8P10	-8010
				.750	-8P12	-8012
				.875	-8P14	-8014
				1.000	-8P16	-8016
				1.250	-8P20	-8020
				1.500	-8P24	-8024
				1.750	-8P28	-8028
				2.000	-8P32	-8032

THIS DOCUMENT PROVIDED BY THE ABBOTT AEROSPACE
Downloaded from http://www.everyspec.com
TECHNICAL LIBRARY
ABBOTTAEROSPACE.COM

SECTION 723

RIVET - SOLID UNIVERSAL HEAD, A286 CORROSION RESISTANT STEEL APPLICABLE DOCUMENT: NAS1198

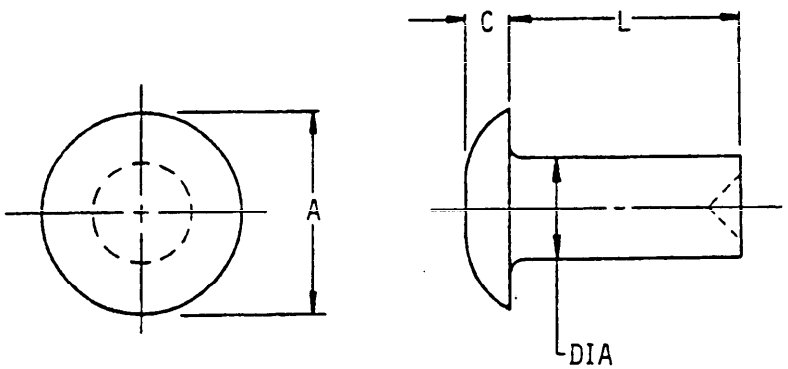

Material	Protective finish	Shear strength (psi) min
Cres A286	Passivate	90,000

TABLE I. Rivet configuration Dash numbers.

Dia	A	C	L Length	NAS1198 Dash no.
.062	.125	.027	.125	-2-2
			.188	-2-3
			.250	-2-4
			.312	-2-5
			.375	-2-6
			.438	-2-7
			.500	-2-8
			.563	-2-9

THIS DOCUMENT PROVIDED BY THE ABBOTT AEROSPACE
Downloaded from http://www.everyspec.com
TECHNICAL LIBRARY
ABBOTTAEROSPACE.COM

TABLE I. Rivet configuration dash numbers. - Continued

Dia	A	C	L Length	NAS1198 Dash no.
.094	.187	.040	.188	-3-3
			.250	-3-4
			.312	-3-5
			.375	-3-6
			.438	-3-7
			.500	-3-8
			.563	-3-9
			.625	-3-10
			.688	-3-11
			.750	-3-12
.125	.250	.054	.250	-4-4
			.312	-4-5
			.375	-4-6
			.438	-4-7
			.500	-4-8
			.563	-4-9
			.625	-4-10
			.688	-4-11
			.750	-4-12
			.813	-4-13
			.875	-4-14
			.938	-4-15
			1.000	-4-16
			1.125	-4-18
			1.250	-4-20
.156	.312	.067	.250	-5-4
			.312	-5-5
			.375	-5-6
			.438	-5-7
			.500	-5-8
			.563	-5-9
			.625	-5-10
			.688	-5-11
			.750	-5-12
			.813	-5-13
			.875	-5-14
			.938	-5-15
			1.000	-5-16
			1.125	-5-18
			1.250	-5-20

THIS DOCUMENT PROVIDED BY THE ABBOTT AEROSPACE
TECHNICAL LIBRARY
ABBOTTAEROSPACE.COM
Downloaded from http://www.everyspec.com

TABLE I. Rivet configuration dash numbers. - Continued

Dia	A	C	L Length	NAS1198 Dash no.
.187	.375	.080	.375	-6-6
			.438	-6-7
			.500	-6-8
			.563	-6-9
			.625	-6-10
			.688	-6-11
			.750	-6-12
			.813	-6-13
			.875	-6-14
			.938	-6-15
			1.000	-6-16
			1.125	-6-18
			1.250	-6-20
.250	.500	.107	.375	-8-6
			.438	-8-7
			.500	-8-8
			.563	-8-9
			.625	-8-10
			.688	-8-11
			.750	-8-12
			.813	-8-13
			.875	-8-14
			.938	-8-15
			1.000	-8-16
			1.125	-8-18
			1.250	-8-20

NOTE: Suggested shank length protrusion 1-1/4 to 1-1/3 times rivet diameter.

THIS DOCUMENT PROVIDED BY THE ABBOTT AEROSPACE
TECHNICAL LIBRARY
ABBOTTAEROSPACE.COM
Downloaded from http://www.everyspec.com

THIS DOCUMENT PROVIDED BY THE ABBOTT AEROSPACE
Downloaded from http://www.everyspec.com
TECHNICAL LIBRARY
ABBOTTAEROSPACE.COM

SECTION 724

RIVET, SOLID-UNIVERSAL HEAD, AMS5737

APPLICABLE DOCUMENT: MS9403

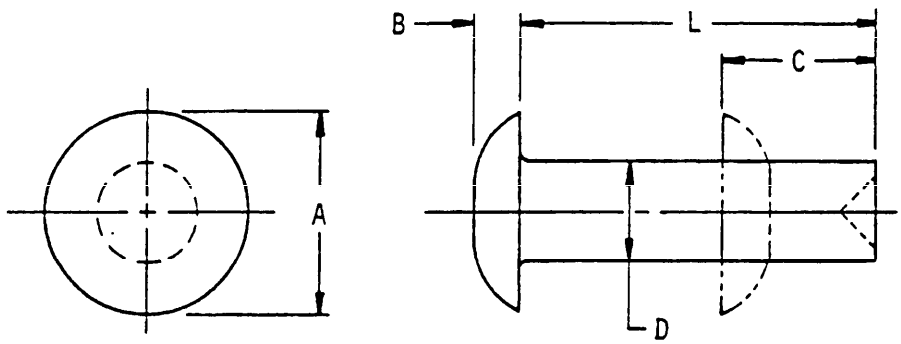

Material	Protective finish	Shear strength (psi) min
Cres 15Cr-26Ni	Not Specified	90,000

TABLE I. Rivet configuration dash numbers.

D Dia	A	B	C	L Length	MS9403 Dash no.
.094	.179 - .197	.040	.141	.219	-066
				.250	-067
				.281	-068
				.312	-069
				.344	-070
				.375	-071
				.406	-072
				.438	-073
				.469	-074

THIS DOCUMENT PROVIDED BY THE ABBOTT AEROSPACE
Downloaded from http://www.everyspec.com
TECHNICAL LIBRARY
ABBOTTAEROSPACE.COM

TABLE I. Rivet configuration dash numbers. - Continued

D Dia	A	B	C	L Length	MS9403 Dash no.
.125	.238 - .262	.054	.188	.250	-128
				.281	-129
				.312	-130
				.344	-131
				.375	-132
				.406	-133
				.438	-134
				.469	-135
				.500	-136
				.531	-137
				.562	-138
				.594	-139
				.625	-140
				.636	-141
				.688	-142
				.719	-143
				.750	-144
				.781	-145
				.812	-146
				.844	-147
.156	.296 - .328	.067	.234	.312	-191
				.344	-192
				.375	-193
				.406	-194
				.438	-195
				.469	-196
				.500	-197
				.531	-198
				.562	-199
				.594	-200
				.625	-201
				.656	-202
				.688	-203
				.719	-204
.188	.356 - .394	.080	.261	.344	-253
				.375	-254
				.406	-255
				.438	-256
				.469	-257
				.500	-258
				.531	-259
				.562	-260
				.594	-261

THIS DOCUMENT PROVIDED BY THE ABBOTT AEROSPACE
Downloaded from http://www.everyspec.com
TECHNICAL LIBRARY
ABBOTTAEROSPACE.COM

SECTION 725

RIVET, SOLID, UNIVERSAL HEAD, AMS7229

APPLICABLE DOCUMENT: AN123151 THRU AN123300

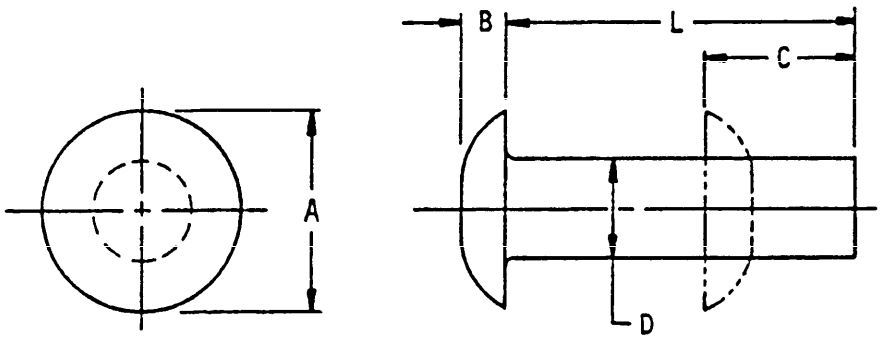

Material	Protective finish	Shear strength (psi) min
Cres 18Cr-11Ni	Not Specified	Not Specified

TABLE I. Rivet configuration part numbers.

D Dia	A	B	C	L Length	Part no.
.062	.125	.027	.112	.188	AN123152
				.219	AN123159
				.250	AN123153
				.281	AN123160
				.312	AN123154
				.344	AN123161
				.375	AN123155
				.406	AN123162
				.438	AN123156
				.469	AN123163
				.500	AN123157

THIS DOCUMENT PROVIDED BY THE ABBOTT AEROSPACE
Downloaded from http://www.everyspec.com
TECHNICAL LIBRARY
ABBOTTAEROSPACE.COM

TABLE I. Rivet configuration part numbers. - Continued

D Dia	A	B	C	L Length	Part no.
.094	.188	.040	.169	.250	AN123169
				.281	AN123165
				.312	AN123170
				.344	AN123166
				.375	AN123171
				.406	AN123167
				.438	AN123172
				.469	AN123179
				.500	AN123173
				.531	AN123180
				.562	AN123174
				.594	AN123181
				.625	AN123175
				.656	AN123182
				.688	AN123183
				.719	AN123199
.125	.259	.054	.225	.312	AN123186
				.344	AN123249
				.375	AN123187
				.406	AN123250
				.438	AN123188
				.469	AN123251
				.500	AN123189
				.531	AN123252
				.562	AN123190
				.594	AN123253
				.625	AN123191
				.656	AN123254
				.688	AN123263
				.719	AN123264
.156	.312	.067	.281	.344	AN123291
				.375	AN123203
				.406	AN123292
				.438	AN123204
				.469	AN123293
				.500	AN123205
				.531	AN123294
				.562	AN123206
				.594	AN123295
				.625	AN123207
				.656	AN123296
				.688	AN123297
				.719	AN123298
.188	.375	.080	.338	.438	AN123220
				.500	AN123221
				.562	AN123222
				.625	AN123223

THIS DOCUMENT PROVIDED BY THE ABBOTT AEROSPACE
Downloaded from http://www.everyspec.com
TECHNICAL LIBRARY
ABBOTTAEROSPACE.COM

SECTION 726

RIVET, SOLID, UNIVERSAL HEAD, AMS7232

APPLICABLE DOCUMENT: AN123301 THRU AN123450

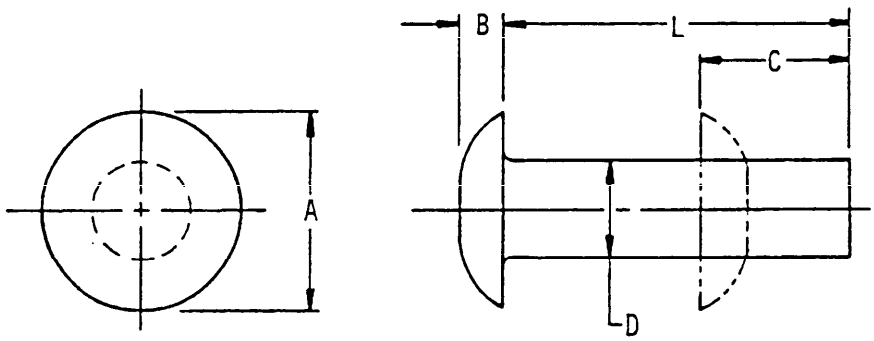

Material	Protective finish	Shear strength (psi) min
Cres15.5Cr-8Fe	Not specified	Not specified

TABLE I. Rivet configuration part numbers.

D Dia	A	B	C	L	Part no.
.062	.125	.027	.112	.188	AN123302
				.219	AN123309
				.250	AN123303
				.281	AN123310
				.312	AN123304
				.344	AN123311
				.375	AN123305
				.406	AN123312
				.438	AN123306
				.469	AN123313
				.500	AN123307

THIS DOCUMENT PROVIDED BY THE ABBOTT AEROSPACE
Downloaded from http://www.everyspec.com
TECHNICAL LIBRARY
ABBOTTAEROSPACE.COM

TABLE I. Rivet configuration part numbers. - Continued

D Dia	A	B	C	L	Part no.
.094	.188	.040	.169	.250	AN123319
				.281	AN123315
				.312	AN123320
				.344	AN123316
				.375	AN123321
				.406	AN123317
				.438	AN123322
				.469	AN123329
				.500	AN123323
				.531	AN123330
				.562	AN123324
				.594	AN123331
				.625	AN123325
				.656	AN123332
				.688	AN123333
				.719	AN123349
.125	.250	.054	.225	.312	AN123336
				.344	AN123399
				.375	AN123337
				.406	AN123400
				.438	AN123338
				.469	AN123401
				.500	AN123339
				.531	AN123402
				.562	AN123340
				.594	AN123403
				.625	AN123341
				.656	AN123404
				.688	AN123413
				.719	AN123414
.156	.312	.067	.281	.344	AN123441
				.375	AN123353
				.406	AN123442
				.438	AN123354
				.469	AN123443
				.500	AN123355
				.531	AN123444
				.562	AN123356
				.594	AN123445
				.625	AN123357
				.656	AN123446
				.688	AN123447
				.719	AN123448
.188	.375	.080	.338	.438	AN123370
				.500	AN123371
				.562	AN123372
				.625	AN123373

THIS DOCUMENT PROVIDED BY THE ABBOTT AEROSPACE
Downloaded from http://www.everyspec.com
TECHNICAL LIBRARY
ABBOTTAEROSPACE.COM

SECTION 727

RIVET, TITANIUM, BIMETAL, 95KSI Fsu, 100° FULL FLUSH, CROWN HEAD, TYPE II

APPLICABLE DOCUMENT: MIL-R-83459/2

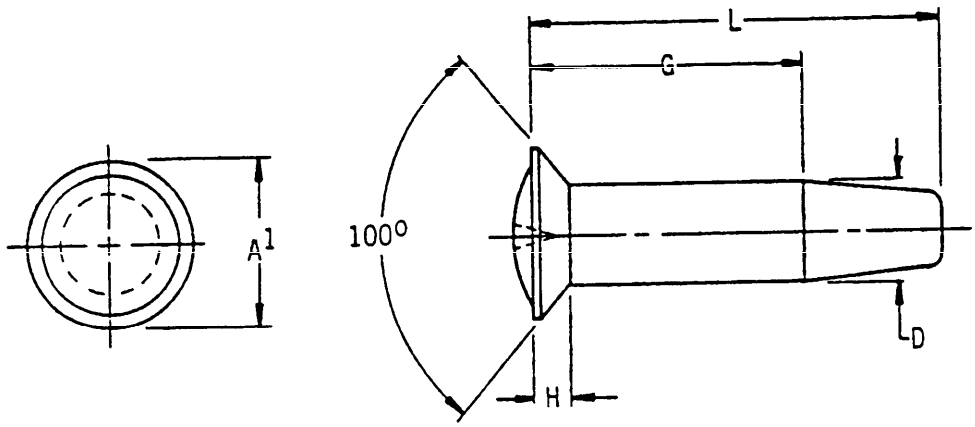

Material	Protective finish	Shear strength (psi) min
Body: Titanium alloy 6AL-4V	None	95,000
Tail: Titanium alloy 45-Cb	None	50,000

THIS DOCUMENT PROVIDED BY THE ABBOTT AEROSPACE
Downloaded from http://www.everyspec.com
TECHNICAL LIBRARY
ABBOTTAEROSPACE.COM

TABLE I. Rivet configuration Dash numbers.

D	A[1]	H	G	Grip range		L Length	M83459/2 Dash number
				Min	Max		
			.125	.126	.156	.330	-5-3
			.156	.157	.187	.361	-5-3R
			.187	.188	.218	.392	-5-4
			.218	.219	.250	.423	-5-4R
			.250	.251	.281	.455	-5-5
			.281	.282	.312	.486	-5-5R
			.312	.313	.343	.517	-5-6
			.343	.344	.375	.548	-5-6R
			.375	.376	.406	.580	-5-7
			.406	.407	.437	.611	-5-7R
			.437	.438	.468	.642	-5-8
			.468	.469	.500	.673	-5-8R
.164	.271	.051					
			.500	.501	.531	.705	-5-9
			.531	.532	.562	.736	-5-9R
			.562	.563	.593	.767	-5-10
			.593	.594	.625	.798	-5-10R
			.625	.626	.656	.830	-5-11
			.656	.657	.687	.861	-5-11R
			.687	.688	.718	.892	-5-12
			.718	.719	.750	.923	-5-12R
			.750	.751	.781	.955	-5-13
			.781	.782	.812	.986	-5-13R
			.812	.813	.843	1.017	-5-14
			.843	.844	.875	1.048	-5-14R
			.875	.876	.906	1.080	-5-15
			.906	.907	.937	1.111	-5-15R
			.937	.938	.968	1.142	-5-16
			.968	.969	1.000	1.173	-5-16R

TABLE I. Rivet configuration Dash numbers. - Continued

D	A[1]	H	G	Grip range Min	Grip range Max	L Length	M83459/2 Dash number
.189	.336	.069	.156	.157	.187	.378	-6-3R
			.187	.188	.218	.410	-6-4
			.218	.219	.250	.441	-6-4R
			.250	.251	.281	.472	-6-5
			.281	.282	.312	.503	-6-5R
			.312	.313	.343	.535	-6-6
			.343	.344	.375	.566	-6-6R
			.375	.376	.406	.597	-6-7
			.406	.407	.437	.628	-6-7R
			.437	.438	.468	.660	-6-8
			.468	.469	.500	.691	-6-8R
			.500	.501	.531	.722	-6-9
			.531	.532	.562	.753	-6-9R
			.562	.563	.593	.785	-6-10
			.593	.594	.625	.816	-6-10R
			.625	.626	.656	.847	-6-11
			.656	.657	.687	.878	-6-11R
			.687	.688	.718	.910	-6-12
			.718	.719	.750	.941	-6-12R
			.750	.751	.781	.972	-6-13
			.781	.782	.812	1.003	-6-13R
			.812	.813	.843	1.035	-6-14
			.843	.844	.875	1.066	-6-14R
			.875	.876	.906	1.097	-6-15
			.906	.907	.937	1.128	-6-15R
			.937	.938	.968	1.160	-6-16
			.968	.969	1.000	1.191	-6-16R
.250	.456	.095	.156	.157	.187		
			.187	.188	.218	.455	-8-4
			.218	.219	.250	.486	-8-4R
			.250	.251	.281	.517	-8-5
			.281	.282	.312	.548	-8-5R
			.312	.313	.343	.580	-8-6
			.343	.344	.375	.611	-8-6R
			.375	.376	.406	.642	-8-7
			.406	.407	.437	.673	-8-7R
			.437	.438	.468	.705	-8-8
			.468	.469	.500	.736	-8-8R
.250	.456	.095	.500	.501	.531	.767	-8-9
			.531	.532	.562	.798	-8-9R
			.562	.563	.593	.830	-8-10
			.593	.594	.625	.861	-8-10R
			.625	.626	.656	.892	-8-11
			.656	.657	.687	.923	-8-11R
			.687	.688	.718	.955	-8-12
			.718	.719	.750	.986	-8-12R
			.750	.751	.781	1.017	-8-13
			.781	.782	.812	1.048	-8-13R
			.812	.813	.843	1.080	-8-14
			.843	.844	.875	1.111	-8-14R
			.875	.876	.906	1.142	-8-15
			.906	.907	.937	1.173	-8-15R
			.937	.938	.968	1.205	-8-16
			.968	.969	1.000	1.236	-8-16R
.312	.540	.106	.250	.251	.312	.565	-10-5
			.312	.313	.375	.627	-10-6
			.375	.376	.437	.690	-10-7
			.437	.438	.500	.752	-10-8
			.500	.501	.562	.815	-10-9
			.562	.563	.625	.877	-10-10
			.625	.626	.687	.940	-10-11
			.687	.688	.750	1.002	-10-12
			.750	.751	.812	1.065	-10-13
			.812	.813	.875	1.127	-10-14
			.875	.876	.937	1.190	-10-15
			.937	.938	1.000	1.252	-10-16
.375	.670	.134	.312	.313	.375	.672	-12-6
			.375	.376	.437	.735	-12-7
			.437	.438	.500	.797	-12-8
			.500	.501	.562	.860	-12-9
			.562	.563	.625	.922	-12-10

THIS DOCUMENT PROVIDED BY ABBOTT AEROSPACE
TECHNICAL LIBRARY
ABBOTTAEROSPACE.COM
Downloaded from http://www.everyspec.com

THIS DOCUMENT PROVIDED BY THE ABBOTT AEROSPACE
TECHNICAL LIBRARY
ABBOTTAEROSPACE.COM
Downloaded from http://www.everyspec.com

THIS DOCUMENT PROVIDED BY THE ABBOTT AEROSPACE
TECHNICAL LIBRARY
Downloaded from http://www.everyspec.com
ABBOTTAEROSPACE.COM

SECTION 728

RIVET, TITANIUM, BIMETAL, 95KSI Fsu, PROTRUDING HEAD, TYPE I

APPLICABLE DOCUMENT: MIL-R-83459/1

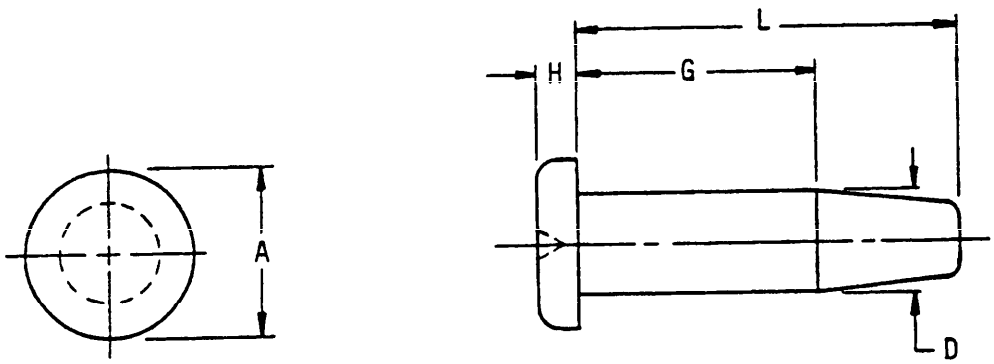

Material	Protective finish	Shear strength (psi) min
Body: Titanium alloy 6AL-4V	None	95,000
Tail: Titanium alloy 45-Cb	None	50,000

THIS DOCUMENT PROVIDED BY THE ABBOTT AEROSPACE
TECHNICAL LIBRARY
ABBOTTAEROSPACE.COM
Downloaded from http://www.everyspec.com

TABLE I. Rivet configuration dash numbers.

D	A	H	G	Grip range		L Length	M83459/1 Dash no.
				Min	Max		
			.093	.094	.125	.298	-5-2R
			.125	.126	.156	.330	-5-3
			.156	.157	.187	.361	-5-3R
			.187	.188	.218	.392	-5-4
			.218	.219	.250	.423	-5-4R
			.250	.251	.281	.455	-5-5
			.281	.282	.312	.486	-5-5R
			.312	.313	.343	.517	-5-6
.164	.235 .249	.049 .055	.343 .375	.344 .376	.375 .406	.548 .580	-5-6R -5-7
			.406	.407	.437	.611	-5-7R
			.437	.438	.468	.642	-5-8
			.468	.469	.500	.673	-5-8R
			.500	.501	.531	.705	-5-9
			.531	.532	.562	.736	-5-9R
			.562	.563	.593	.767	-5-10
			.593	.594	.625	.798	-5-10R
			.625	.626	.656	.830	-5-11
			.656	.657	.687	.861	-5-11R
			.687	.688	.718	.892	-5-12
			.718	.719	.750	.923	-5-12R
			.750	.751	.781	.955	-5-13
			.781	.782	.812	.986	-5-13R
			.812	.813	.843	1.017	-5-14
			.843	.844	.875	1.048	-5-14R
			.875	.876	.906	1.080	-5-15
			.906	.907	.937	1.111	-5-15R
			.937	.938	.968	1.142	-5-16
			.968	.969	1.000	1.173	-5-16R

TABLE I. Rivet configuration dash numbers. -Continued

D	A	H	G	Grip range Min	Grip range Max	L Length	M83459/1 Dash no.	D	A	H	G	Grip range Min	Grip range Max	L Length	M83459/1 Dash no.
			.125	.126	.156	.347	-6-3				.125	.126	.156	.392	-8-3
			.156	.157	.187	.378	-6-3R				.156	.157	.187	.423	-8-3R
			.187	.188	.218	.410	-6-4				.187	.188	.218	.455	-8-4
			.218	.219	.250	.441	-6-4R				.218	.219	.250	.486	-8-4R
			.250	.251	.281	.472	-6-5				.250	.251	.281	.517	-8-5
			.281	.282	.312	.503	-6-5R				.281	.282	.312	.548	-8-5R
			.312	.313	.343	.535	-6-6				.312	.313	.343	.580	-8-6
			.343	.344	.375	.566	-6-6R				.343	.344	.375	.611	-8-6R
			.375	.376	.406	.597	-6-7				.375	.376	.406	.642	-8-7
			.406	.407	.437	.628	-6-7R				.406	.407	.437	.673	-8-7R
			.437	.438	.468	.660	-6-8				.437	.438	.468	.705	-8-8
			.468	.469	.500	.691	-6-8R				.468	.469	.500	.736	-8-8R
.189	.286-.302	.056-.062	.500	.501	.531	.722	-6-9	.250	.363-.377	.074-.080	.500	.501	.531	.767	-8-9
			.531	.532	.562	.753	-6-9R				.531	.532	.562	.798	-9-9R
			.562	.563	.593	.785	-6-10				.562	.563	.593	.830	-8-10
			.593	.594	.625	.816	-6-10R				.593	.594	.625	.861	-8-10R
			.625	.626	.656	.847	-6-11				.625	.626	.656	.892	-8-11
			.656	.657	.687	.878	-6-11R				.656	.657	.687	.923	-8-11R
			.687	.688	.718	.910	-6-12				.687	.688	.718	.955	-8-12
			.718	.719	.750	.941	-6-12R				.718	.719	.750	.986	-8-12R
			.750	.751	.781	.972	-6-13				.750	.751	.781	1.017	-8-13
			.781	.782	.812	1.003	-6-13R				.781	.782	.812	1.048	-8-13R
			.812	.813	.834	1.035	-6-14				.812	.813	.843	1.080	-8-14
			.843	.844	.875	1.066	-6-14R				.843	.844	.875	1.111	-8-14R
			.875	.876	.906	1.097	-6-15				.875	.876	.906	1.142	-8-15
			.906	.907	.937	1.128	-6-15R				.906	.907	.937	1.173	-8-15R
			.937	.938	.968	1.160	-6-16				.937	.938	.968	1.205	-8-16
			.968	.969	1.000	1.191	-6-16R				.968	.969	1.000	1.236	-8-16R

THIS DOCUMENT DOWNLOADED FROM http://www.everyspec.com
TECHNICAL LIBRARY
ABBOTTAEROSPACE.COM

THIS DOCUMENT PROVIDED BY THE ABBOTT AEROSPACE
TECHNICAL LIBRARY
Downloaded from http://www.everyspec.com
ABBOTTAEROSPACE.COM

TABLE I. Rivet configuration dash numbers. -Continued

D	A	H	G	Grip range Min	Grip range Max	L Length	M83459/1 Dash no.	D	A	H	G	Grip range Min	Grip range Max	L Length	M83459/1 Dash no.
.312	.455-.471	.094-.100	.125 .187	.126 .188	.187 .250	.440 .502	-10-3 -10-4	.375	.549-.565	.113-.119	.187	.188	.250	.547	-12-4
			.250 .312	.251 .313	.312 .375	.565 .627	-10-5 -10-6				.250 .312	.251 .313	.312 .375	.610 .672	-12-5 -12-6
			.375 .437	.376 .438	.437 .500	.690 .752	-10-7 -10-8				.375 .437	.376 .438	.437 .500	.735 .797	-12-7 -12-8
			.500 .562	.501 .563	.562 .625	.815 .877	-10-9 -10-10				.500 .562	.501 .563	.562 .625	.860 .922	-12-9 -12-10
			.625 .687	.626 .688	.687 .750	.940 1.002	-10-11 -10-12								
			.750 .812	.751 .813	.812 .875	1.065 1.127	-10-13 -10-14								
			.875 .937	.876 .938	.937 1.000	1.190 1.252	-10-15 -10-16								

THIS DOCUMENT PROVIDED BY THE ABBOTT AEROSPACE
Downloaded from http://www.everyspec.com
TECHNICAL LIBRARY
ABBOTTAEROSPACE.COM

SECTION 729

RIVET, TITANIUM, BIMETAL, 95KSI Fsu, 100° REDUCED FLUSH CROWN HEAD TYPE III

APPLICABLE DOCUMENT: MIL-R-83459/3

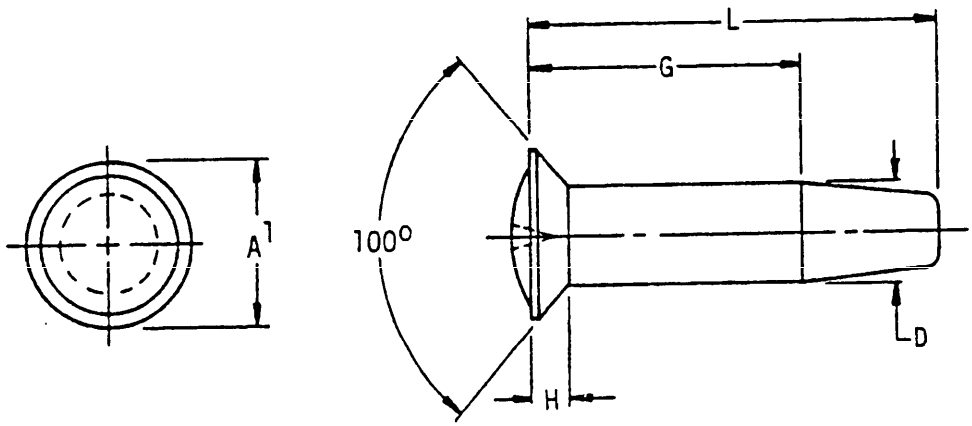

Material	Protective finish	Shear strength (psi) min
Body: Titanium alloy 6AL-4V	None	95,000
Tail: Titanium alloy 45-Cb	None	50,000

THIS DOCUMENT PROVIDED BY THE ABBOTT AEROSPACE
Downloaded from http://www.everyspec.com
TECHNICAL LIBRARY
ABBOTTAEROSPACE.COM

TABLE I. Rivet configuration dash numbers.

D	A[1]	H	G	Grip range		L	M83459/3
				Min	Max	Length	Dash no.
			.125	.126	.156	.330	-5-3
			.156	.157	.187	.361	-5-3R
			.187	.188	.218	.392	-5-4
			.218	.219	.250	.423	-5-4R
			.250	.251	.281	.455	-5-5
			.281	.282	.312	.486	-5-5R
			.312	.313	.343	.517	-5-6
			.343	.344	.375	.548	-5-6R
			.375	.376	.406	.580	-5-7
.164	.230	.034	.406	.407	.437	.611	-5-7R
			.437	.438	.468	.642	-5-8
			.468	.469	.500	.673	-5-8R
			.500	.501	.531	.705	-5-9
			.531	.532	.562	.736	-5-9R
			.562	.563	.593	.767	-5-10
			.593	.594	.625	.798	-5-10R
			.625	.626	.656	.830	-5-11
			.656	.657	.687	.861	-5-11R
			.687	.688	.718	.892	-5-12
			.718	.719	.750	.923	-5-12R
			.750	.751	.781	.955	-5-13
			.781	.782	.812	.986	-5-13R
			.812	.813	.843	1.017	-5-14
			.843	.844	.875	1.048	-5-14R
			.875	.876	.906	1.080	-5-15
			.906	.907	.937	1.111	-5-15R
			.937	.938	.968	1.142	-5-16
			.968	.969	1.000	1.173	-5-16R

THIS DOCUMENT PROVIDED BY THE ABBOTT AEROSPACE
Downloaded from http://www.everyspec.com
TECHNICAL LIBRARY
ABBOTTAEROSPACE.COM

TABLE I. Rivet configuration dash numbers. - Continued

D	A[1]	H	G	Grip range Min	Grip range Max	L Length	M83459/3 Dash no.
.189	.282	.046	.125	.126	.156	.347	-6-3
			.156	.157	.187	.378	-6-3R
			.187	.188	.218	.410	-6-4
			.218	.219	.250	.441	-6-4R
			.250	.251	.281	.472	-6-5
			.281	.282	.312	.503	-6-5R
			.312	.313	.343	.535	-6-6
			.343	.344	.375	.566	-6-6R
			.375	.376	.406	.597	-6-7
			.406	.407	.437	.628	-6-7R
			.437	.438	.468	.660	-6-8
			.468	.469	.500	.691	-6-8R
			.500	.501	.531	.722	-6-9
			.531	.532	.562	.753	-6-9R
			.562	.563	.593	.785	-6-10
			.593	.594	.625	.816	-6-10R
			.625	.626	.656	.847	-6-11
			.656	.657	.687	.878	-6-11R
			.687	.688	.718	.910	-6-12
			.718	.719	.750	.941	-6-12R
			.750	.751	.781	.972	-6-13
			.781	.782	.812	1.003	-6-13R
			.812	.813	.843	1.035	-6-14
			.843	.844	.875	1.066	-6-14R
			.875	.876	.906	1.097	-6-15
			.906	.907	.937	1.128	-6-15R
			.937	.938	.968	1.160	-6-16
			.968	.969	1.000	1.191	-6-16R
.250	.373	.060	.156	.157	.187	.423	-8-3R
			.187	.188	.218	.455	-8-4
			.218	.219	.250	.486	-8-4R
			.250	.251	.281	.517	-8-5
			.281	.282	.312	.548	-8-5R
			.312	.313	.343	.580	-8-6
			.343	.344	.375	.611	-8-6R
			.375	.376	.406	.642	-8-7
			.406	.407	.437	.673	-8-7R
			.437	.438	.468	.705	-8-8
			.468	.469	.500	.736	-8-8R
			.500	.501	.531	.767	-8-9
			.531	.532	.562	.798	-8-9R
			.562	.563	.593	.830	-8-10
			.593	.594	.625	.861	-8-10R
			.625	.626	.656	.892	-8-11
			.656	.657	.687	.923	-8-11R
			.687	.688	.718	.955	-8-12
			.718	.719	.750	.986	-8-12R
			.750	.751	.781	1.017	-8-13
			.781	.782	.812	1.048	-8-13R
			.812	.813	.843	1.080	-8-14
			.843	.844	.875	1.111	-8-14R
			.875	.876	.906	1.142	-8-15
			.906	.907	.937	1.173	-8-15R
			.937	.938	.968	1.205	-8-16
			.968	.969	1.000	1.236	-8-16R
.312	.447	.067	.187	.188	.250	.502	-10-4
			.250	.251	.312	.565	-10-5
			.312	.313	.375	.627	-10-6
			.375	.376	.437	.690	-10-7
			.437	.438	.500	.752	-10-8
			.500	.501	.562	.815	-10-9
			.562	.563	.625	.877	-10-10
			.625	.626	.687	.940	-10-11
			.687	.688	.750	1.002	-10-12
			.750	.751	.812	1.065	-10-13
			.812	.813	.875	1.127	-10-14
			.875	.876	.937	1.190	-10-15
			.937	.938	1.000	1.252	-10-16
.375	.534	.077	.250	.251	.312	.610	-12-5
			.312	.313	.375	.672	-12-6
			.375	.376	.437	.735	-12-7
			.437	.438	.500	.797	-12-8
			.500	.501	.562	.860	-12-9
			.562	.563	.625	.922	-12-10

THIS DOCUMENT PROVIDED BY THE ABBOTT AEROSPACE
TECHNICAL LIBRARY
ABBOTTAEROSPACE.COM
Downloaded from http://www.everyspec.com

THIS DOCUMENT PROVIDED BY THE ABBOTT AEROSPACE
Downloaded from http://www.everyspec.com
TECHNICAL LIBRARY
ABBOTTAEROSPACE.COM

SECTION 801

RIVET, SPLIT-OVAL HEAD

APPLICABLE DOCUMENT: MS35684, MS35685

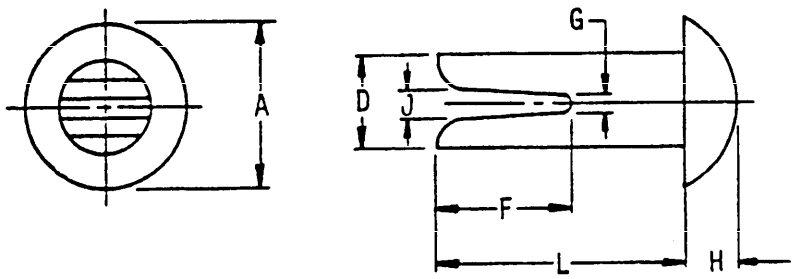

Footnotes	Part numbers	Material	Shear strength (psi) min
1/	MS35685 + dash no,	Brass composition 260 or 270	35,000
2/	MS35684 + dash no.	Carbon steel C1005 thru C1022	32,000

TABLE I. Part numbers.

D Nominal size	.125				.140				.187			
A Head dia	.224				.318				.350			
H Head thickness	.037				.052				.064			
L Length	Slot width At base G	Slot width At point J	Slot depth F	1/ or 2/	Slot width At base G	Slot width At point J	Slot depth F	1/ or 2/	Slot width At base G	Slot width At point J	Slot depth F	1/ or 2/
.250	.040	.052	.219	-1	.050	.073	.219	-9	.065	.120	.219	-17
.312	.040	.057	.281	-2	.050	.078	.281	-10	.065	.125	.281	-18
.375	.040	.057	.312	-3	.050	.081	.328	-11	.065	.127	.312	-19
.438	.040	.057	.312	-4	.050	.083	.344	-12	.065	.130	.375	-20
.500	.040	.057	.312	-5	.052	.077	.391	-13	.068	.133	.437	-21
.562	.040	.057	.312	-6	.052	.077	.391	-14	.068	.133	.437	-22
.625	.040	.057	.312	-7	.052	.077	.391	-15	.068	.133	.437	-23
.750	.040	.057	.312	-8	.052	.077	.391	-16	.068	.133	.437	-24

THIS DOCUMENT PROVIDED BY THE ABBOTT AEROSPACE
TECHNICAL LIBRARY
ABBOTTAEROSPACE.COM
Downloaded from http://www.everyspec.com

THIS DOCUMENT PROVIDED BY ABBOTT AEROSPACE
Downloaded from http://www.everyspec.com
TECHNICAL LIBRARY
ABBOTTAEROSPACE.COM

SECTION 901

RIVET-TUBULAR, 150° FLAT COUNTERSUNK HEAD

APPLICABLE DOCUMENT: MS16536

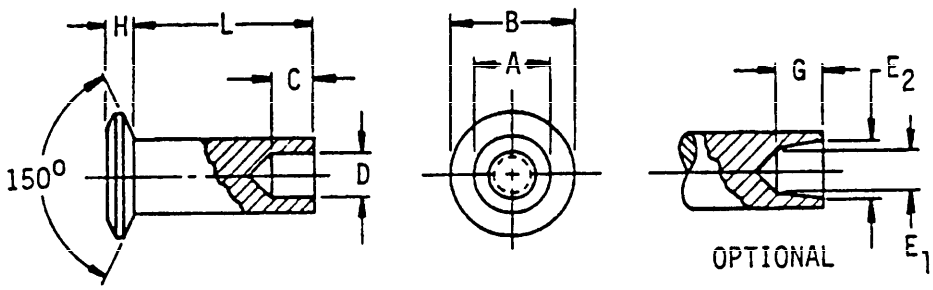

Material		Protective finish	Shear strength (psi) min
Carbon steel C1005 thru C1022		Cadmium plate	32,000
Brass composition 260 or 270 quarter hard		Oxide or black finish or nickel plate	35,000
Aluminum alloy	2117-T4	Anodize or chemical surface treatment	26,000
	5056-H32	None	24,000

TABLE I. Rivet configuration.

Nominal size	A	.123		.146		.188	
		Min	Max	Min	Max	Min	Max
Head diameter	B	--	.255	--	.303	--	.367
Head thickness	H	--	.038	--	.045	--	.051
Straight hole	D	--	.090	--	.105	--	.139
Taper at bottom of hole	E_1	.079	--	.085	--	.110	--
Taper at end of rivet	E_2	-	.095	--	.112	--	.145
Hole depth (taper)	G	.082	--	.104	--	.135	--
Hole depth (straight) nom	C	.094		.126		.219	
Clinch allowance		.074		.088		.164	

THIS DOCUMENT PROVIDED BY THE ABBOTT AEROSPACE
TECHNICAL LIBRARY
ABBOTTAEROSPACE.COM
Downloaded from http://www.everyspec.com

TABLE II. MS16536 Dash numbers.

L Length	Carbon steel	Brass	Aluminum alloy
	Dash number		
Nominal size .123			
.250	-1	-16	-31
.281	-2	-17	-32
.312	-3	-18	-33
.344	-4	-19	-34
.375	-5	-20	-35
.406	-6	-21	-36
.438	-7	-22	-37
.469	-8	-23	-38
.500	-9	-24	-39
.531	-10	-25	-40
.562	-11	-26	-41
.594	-12	-27	-42
.625	-13	-28	-43
.688	-14	-29	-44
.750	-15	-30	-45
Nominal size .146			
.250	-76	-91	-106
.281	-77	-92	-107
.312	-78	-93	-108
.344	-79	-94	-109
.375	-80	-95	-110
.406	-81	-96	-111
.438	-82	-97	-112
.469	-83	-98	-113
.500	-84	-99	-114
.531	-85	-100	-115
.562	-86	-101	-116
.594	-87	-102	-117
.625	-88	-103	-118
.688	-89	-104	-119
.750	-90	-105	-120

L Length	Carbon steel	Brass
	Dash number	
Nominal size .188		
.250	-151	-168
.281	-152	-169
.312	-153	-170
.344	-154	-171
.375	-155	-172
.406	-156	-173
.438	-157	-174
.469	-158	-175
.500	-159	-176
.531	-160	-177
.562	-161	-178
.594	-162	-179
.625	-163	-180
.656	-164	-181
.688	-165	-182
.719	-166	-183
.750	-167	-184

THIS DOCUMENT PROVIDED BY THE ABBOTT AEROSPACE
Downloaded from http://www.everyspec.com
TECHNICAL LIBRARY
ABBOTTAEROSPACE.COM

SECTION 902

RIVET, TUBULAR-FLAT HEAD

APPLICABLE DOCUMENT: MS51942

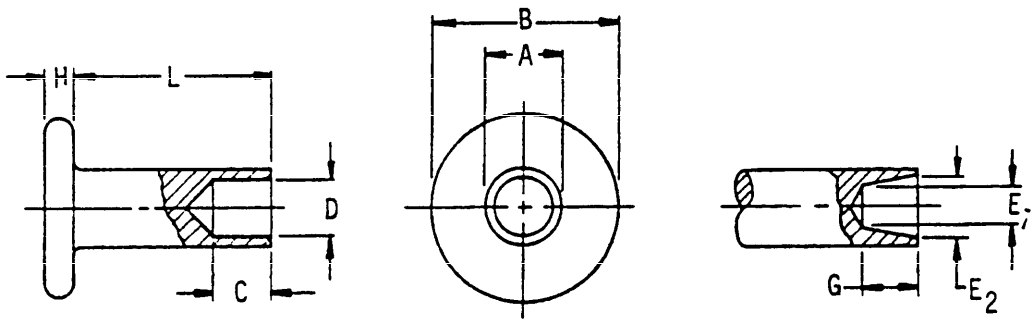

Material	Protective finish	Shear strength (psi) min
Carbon steel C1005 thru C1022	None	32,000
Brass composition 260 or 270 quarter hard	None	35,000

THIS DOCUMENT PROVIDED BY THE ABBOTT AEROSPACE
Downloaded from http://www.everyspec.com
TECHNICAL LIBRARY
ABBOTTAEROSPACE.COM

TABLE I. Rivet configuration dash numbers.

Nominal size	A	.123		.146		.188	
Head diameter	B	--	.223	--	.317	--	.381
Head thickness	H	--	.041	--	.052	--	.067
Straight hole	D	--	.090	--	.107	--	.141
Taper at bottom of hole	E_1	.079	--	.091	--	.120	--
Taper at end of rivet	E_2	--	.095	--	.112	--	.145
Hole depth (taper)	G	.082	--	104	--	.135	--
Hole depth (straight)	C	--	.104	--	.135	--	.166
Clinch allowance		.074		.088		.120	

L Length	Steel MS51942 Dash number			Brass MS51942 Dash number		
	.123	.146	.188	.123	.146	.188
.094	-1	-	-	-50	-	-
.125	-2	-	-	-51	-	-
.156	-3	-	-	-52	-	-
.187	-4	-17	-	-53	-66	-
.219	-5	-18	-	-54	-67	-
.250	-6	-19	-32	-55	-68	-
.281	-	-	-33	-	-69	-
.312	-8	-21	-34	-57	-70	-84
.375	-9	-22	-35	-58	-71	-
.500	-	-24	-37	-	-73	-86
.562	-	-25	-38	-	-74	-
.625	-	-26	-39	-	-75	-

THIS DOCUMENT PROVIDED BY THE ABBOTT AEROSPACE
TECHNICAL LIBRARY
ABBOTTAEROSPACE.COM
Downloaded from http://www.everyspec.com

SECTION 903

RIVET-TUBULAR, OVAL HEAD

APPLICABLE DOCUMENT: MS16535

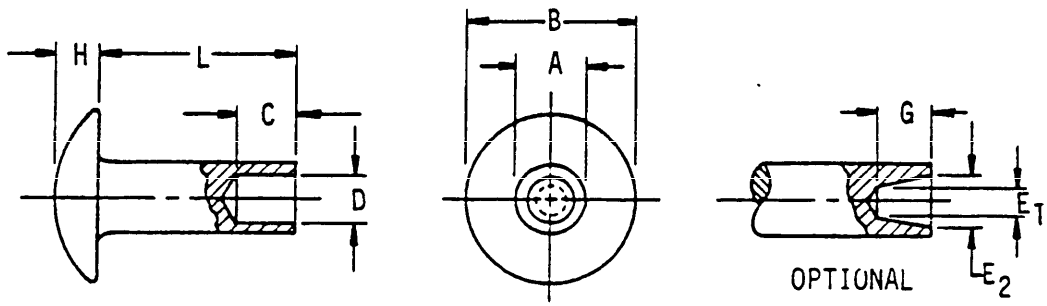

Material		Protective finish	Shear strength (psi) min
Carbon steel C1005 thru C1022		Cadmium plate	32,000
Brass composition 260 or 270 quarter hard		Oxide or black finish or nickel plate	35,000
Aluminum alloy	2117-T4	Anodize or chemical surface treatment	26,000
	5056-H32	None	24,000
Nickel copper alloy (Monel)		None	49,000
Copper type S		None	24,000

TABLE I. Rivet configuration.

Nominal size	A	.061		.089		.123		.146		.188	
Head diameter	B	Min	Max	Min	Max	Min	Max	Min	Max	Min	Max
Head thickness	H										
Straight hole	D	--	.114	--	.152	--	.223	--	.239	--	.318
Taper at bottom of hole	E_1	--	.019	--	.026	--	.038	--	.045	--	.065
Taper at end of rivet	E_2	--	.044	--	.068	--	.090	--	.107	--	.141
Hole depth (taper)	G	.032	--	.050	--	.079	--	.085	--	110	--
		--	.046	--	.068	--	.095	--	.112	--	.145
Hole depth (straight) nom	C	.042	--	.057	--	.082	--	.104	--	135	--
Clinch allowance		.046 .037		.064 .064		.094 .074		.126 .088		.155 .125	

THIS DOCUMENT PROVIDED BY THE ABBOTT AEROSPACE
Downloaded from http://www.everyspec.com
TECHNICAL LIBRARY
ABBOTTAEROSPACE.COM

TABLE II. MS16535 Dash numbers.

L Length	Carbon steel	Brass	Aluminum alloy	Nickel copper alloy	Copper
	Dash number				
Nominal size .061					
.094	-1	-11	-21	-31	-41
.125	-2	-12	-22	-32	-42
.156	-3	-13	-23	-33	-43
.188	-4	-14	-24	-34	-44
.219	-5	-15	-25	-35	-45
.250	-6	-16	-26	-36	-46
.281	-7	-17	-27	-37	-47
.312	-8	-18	-28	-38	-48
.344	-9	-19	-29	-39	-49
.375	-10	-20	-30	-40	-50
Nominal size .089					
.094	-51	-63	-75	-87	-99
.125	-52	-64	-76	-88	-100
.156	-53	-65	-77	-89	-101
.188	-54	-66	-78	-90	-102
.219	-55	-67	-79	-91	-103
.250	-56	-68	-80	-92	-104
.281	-57	-69	-81	-93	-105
.312	-58	-70	-82	-94	-106
.344	-59	-71	-83	-95	-107
.375	-60	-72	-84	-96	-108
.438	-61	-73	-85	-97	-109
.500	-62	-74	-86	-98	-110
.531	-	-	-	-401	-
Nominal size .123					
.094	-111	-131	-151	-171	-191
.125	-112	-132	-152	-172	-192
.156	-113	-133	-153	-173	-193
.188	-114	-134	-154	-174	-194
.219	-115	-135	-155	-175	-195
.250	-116	-136	-156	-176	-196
.281	-117	-137	-157	-177	-197
.312	-118	-138	-158	-178	-198
.344	-119	-139	-159	-179	-199
.375	-120	-140	-160	-180	-200
.406	-121	-141	-161	-181	-201
.438	-122	-142	-162	-182	-202
.469	-123	-143	-163	-183	-203
.500	-124	-144	-164	-184	-204
.531	-125	-145	-165	-185	-205
.562	-126	-146	-166	-186	-206
.594	-127	-147	-167	-187	-207
.625	-128	-148	-168	-188	-208
.688	-129	-149	-169	-189	-209
.750	-130	-150	-170	-190	-210

L Length	Carbon steel	Brass	Aluminum alloy	Nickel Copper alloy	Copper
	Dash number				
Nominal size .146					
.125	-211	-228	-245	-262	-279
.156	-212	-229	-246	-263	-280
.188	-213	-230	-247	-264	-281
.219	-214	-231	-248	-265	-282
.250	-215	-232	-249	-266	-283
.281	-216	-233	-250	-267	-284
.312	-217	-234	-251	-268	-285
.344	-218	-235	-252	-269	-286
.375	-219	-236	-253	-270	-287
.406	-220	-237	-254	-271	-288
.438	-221	-238	-255	-272	-289
.469	-222	-239	-256	-273	-290
.500	-223	-240	-257	-274	-291
.531	-224	-241	-258	-275	-292
.562	-225	-242	-259	-276	-293
.594	-226	-243	-260	-277	-294
.625	-227	-244	-261	-278	-295
Nominal size .188					
.188	-296	-317	-338	-359	-380
.219	-297	-318	-339	-360	-381
.250	-298	-319	-340	-361	-382
.281	-299	-320	-341	-362	-383
.312	-300	-321	-342	-363	-384
.344	-301	-322	-343	-364	-385
.375	-302	-323	-344	-365	-386
.406	-303	-324	-345	-366	-387
.438	-304	-325	-346	-367	-388
.469	-305	-326	-347	-368	-389
.500	-306	-327	-348	-369	-390
.531	-307	-328	-349	-370	-391
.562	-308	-329	-350	-371	-392
.594	-309	-330	-351	-372	-393
.625	-310	-331	-352	-373	-394
.656	-311	-332	-353	-374	-395
.688	-312	-333	-354	-375	-396
.719	-313	-334	-355	-376	-397
.750	-314	-335	-356	-377	-398
.875	-315	-336	-357	-378	-399
1.000	-316	-337	-358	-379	-400

THIS DOCUMENT PROVIDED BY THE ABBOTT AEROSPACE
Downloaded from http://www.everyspec.com
TECHNICAL LIBRARY
ABBOTTAEROSPACE.COM

STANDARDIZATION DOCUMENT IMPROVEMENT PROPOSAL

INSTRUCTIONS: This form is provided to solicit beneficial comments which may improve this document and enhance its use. DoD contractors, government activities, manufacturers, vendors, or other prospective users of the document are invited to submit comments to the government. Fold on lines on reverse side, staple in corner, and send to preparing activity. Attach any pertinent data which may be of use in improving this document. If there are additional papers, attach to form and place both in an envelope addressed to preparing activity. A response will be provided to the submitter, when name and address is provided, within 30 days indicating that the 1426 was received and when any appropriate action on it will be completed.

NOTE: This form shall not be used to submit requests for waivers, deviations or clarification of specification requirements on current contracts. Comments submitted on this form do not constitute or imply authorization to waive any portion of the referenced document(s) or to amend contractual requirements.

DOCUMENT IDENTIFIER *(Number)* AND TITLE

MIL-STD-1759 RIVETS AND RIVET TYPE FASTENERS, PREFERRED FOR DESIGN, LISTING OF

NAME OF ORGANIZATION AND ADDRESS OF SUBMITTER

☐ VENDOR ☐ USER ☐ MANUFACTURER

1. ☐ HAS ANY PART OF THE DOCUMENT CREATED PROBLEMS OR REQUIRED INTERPRETATION IN PROCUREMENT USE? ☐ IS ANY PART OF IT TOO RIGID, RESTRICTIVE, LOOSE OR AMBIGUOUS? PLEASE EXPLAIN BELOW.

A. GIVE PARAGRAPH NUMBER AND WORDING

B. RECOMMENDED WORDING CHANGE

C. REASON FOR RECOMMENDED CHANGE(S)

2. REMARKS

SUBMITTED BY *(Printed or typed name and address — Optional)*

TELEPHONE NO

DATE

DD FORM 1 OCT 76 1426

EDITION OF 1 JAN 72 WILL BE USED UNTIL EXHAUSTED.

THIS DOCUMENT PROVIDED BY THE ABBOTT AEROSPACE
Downloaded from http://www.everyspec.com
TECHNICAL LIBRARY
ABBOTTAEROSPACE.COM

FOLD

POSTAGE AND FEES PAID

OFFICIAL BUSINESS
PENALTY FOR PRIVATE USE $300

Commander
Aeronautical Systems Division (AFSC)
ATTN: ASD/ENESS
Wright-Patterson AFB, OH 45433

FOLD