R. & M. No. 1971
(4709)
A.R.C. Technical Report

MINISTRY OF AIRCRAFT PRODUCTION

AERONAUTICAL RESEARCH COMMITTEE
REPORTS AND MEMORANDA

Determination of Profile Drag at High Speeds by a Pitot Traverse Method

By

C. N. H. LOCK, M.A., F.R.Ae.S.,
W. F. HILTON, B.Sc., Ph.D., A.R.C.S.
and
S. GOLDSTEIN, M.A., Ph.D., F.R.S.,
of the Aerodynamics Division, N.P.L.

LONDON: HIS MAJESTY'S STATIONERY OFFICE
Price 7*s.* 0*d.* net

Determination of Profile Drag at High Speeds by a Pitot Traverse Method

By

C. N. H. LOCK, M.A., F.R.Ae.S.,
W. F. HILTON, B.Sc., Ph.D., A.R.C.S.
and
S. GOLDSTEIN, M.A., Ph.D., F.R.S.,
of the Aerodynamics Division, N.P.L.

Reports and Memoranda No. 1971
19th September, 1940*

1. *Introduction and Summary.*—At speeds at which the compressibility of the air can be neglected it is known that the profile drag of an aerofoil section can be determined with sufficient accuracy from measurements of total head and static pressure across a section of the wake.[1] When compressibility is important measurement of a third quantity—e.g., air density—becomes theoretically necessary; but it appears that it is sufficiently accurate to assume that the total energy†, E, per unit mass of the air is constant across a section of the wake, and then measurements of total head and static pressure suffice. Assumptions analogous to those of R. & M. 1688 are that the total energy and the total head or the entropy are constant along a stream-tube in the wake between the measurement plane and a plane sufficiently far downstream for the static pressure to have become constant at its upstream value p_0. On this basis a formula for determining the profile drag coefficient C_D is worked out below.

The constancy of E is equivalent to the constancy of the stagnation temperature† T_H, and experimental evidence of the constancy of T_H has been obtained. Experimental evidence concerning the accuracy of the pitot-traverse method, as described in this report, could also be deduced (i) from agreement between the values of the drag deduced from traverses at different distances behind the aerofoil, on which there is at present some limited data, and (ii) from a comparison of the values of the drag deduced from a wake exploration with the values measured on a balance, on which the evidence is incomplete because of the uncertain increase of drag on the end portions of the aerofoils in the tunnel boundary layer. Some of the available experimental evidence bearing on the accuracy of the method is set out below; it is clearly by no means complete, but in conjunction with theoretical considerations is thought to justify the use of the method, with a degree of accuracy sufficient for practical purposes, at any rate up to speeds of about 0·9 of the velocity of sound.‡

The presence of condensed moisture in the working section of a high speed tunnel will also vitiate the arguments of the present paper; this matter is discussed below in §13 and in Ref. 12.

---

* The experiments described in this report were made between 1936 and 1938: the report was revised for publication in 1945.

† For definitions of E and T_H *see* §2.

‡ The method should not be vitiated by the presence of limited shock waves.

2. *Definitions and some General Results for the Flow of a Compressible Fluid.*—For a perfect gas with constant specific heats

$$\frac{p}{\rho} = RT \qquad (1)$$

where p is the pressure, ρ the density, and T the absolute temperature. The specific heats at constant pressure and at constant volume, in work units, are denoted by C_p and C_v, and their ratio by γ; the value of γ is taken as $1 \cdot 4$. The total energy, E, per unit mass is the sum of the kinetic energy, E_1, per unit mass, the pressure energy, E_2, per unit mass, and the intrinsic energy, E_3, per unit mass, where

$$E_1 = \tfrac{1}{2}q^2,\ E_2 = p/\rho,\ E_3 = C_v\, T, \qquad (2)$$

and q is the resultant velocity. Since

$$C_p = C_v + R, \qquad (3)$$

$$E = \frac{p}{\rho} + C_v T + \tfrac{1}{2}q^2 = C_p\, T + \tfrac{1}{2}q^2 = \frac{\gamma}{(\gamma-1)}\frac{p}{\rho} + \tfrac{1}{2}q^2. \qquad (4)$$

The entropy S of a perfect gas is given by

$$S = C_v \log \frac{p}{\rho^\gamma} = C_p \log \frac{RT}{p^\beta}, \qquad (5)$$

where

$$\beta = \frac{\gamma - 1}{\gamma}. \qquad (6)$$

The total head H is defined as the pressure attained by a moving fluid element when brought to rest without change of entropy or total energy. It appears that H is sufficiently nearly equal to the pressure in an open-ended pitot-tube at velocities below the local velocity of sound, and this condition is satisfied in the wakes of aerofoils at subsonic speeds*.

The density and temperature corresponding to the pressure H are denoted by ρ_H and T_H and are referred to as the stagnation density and stagnation temperature. The velocity of sound, a, at pressure p and density ρ is given by

$$a^2 = \gamma p/\rho. \qquad (7)$$

The local Mach number is denoted by

$$M = q/a = (q\rho^{1/2})/(\gamma p)^{1/2}. \qquad (8)$$

It follows from the definitions and from equation (4) that the total energy per unit mass satisfies the relation

$$E = \frac{\gamma}{(\gamma - 1)}\frac{H}{\rho_H} = C_p\, T_H, \qquad (9)$$

so that

$$\tfrac{1}{2}q^2 = C_p(T_H - T). \qquad (10)$$

* At velocities above the local velocity of sound H may be deduced from a pitot-tube reading by a formula due to Rayleigh, Scientific Papers, V, 608–610.

The algebra is simplified by using T and T_H as variables whenever possible. It is necessary, however, to introduce the pressure since this alone is easily observable ;

$$C_p\, T = \frac{\gamma}{(\gamma - 1)} \frac{p}{\rho}, \; C_p\, T_H = \frac{\gamma}{(\gamma - 1)} \frac{H}{\rho_H}. \quad \ldots \quad (11)$$

as in (4). By definition the stagnation condition refers to fluid brought to rest adiabatically so that by (5)

$$\frac{p}{\rho^\gamma} = \frac{H}{\rho_H{}^\gamma}.$$

Hence eliminating density

$$\frac{T_H}{T} = \left(\frac{H}{p}\right)^\beta. \quad \ldots \quad (12)$$

The final formula for drag coefficient is most conveniently expressed in terms of the auxiliary variable λ closely related to the Mach number M,

$$\lambda = \tfrac{1}{2}\gamma M^2 = \tfrac{1}{2}\gamma (q/a)^2 = \tfrac{1}{2}\rho q^2/p = \frac{1}{\beta} \cdot \frac{(T_H - T)}{T} = \frac{1}{\beta}\left\{\left(\frac{H}{p}\right)^\beta - 1\right\} \ldots \quad (13)$$

λ is tabulated as a function of $(H - p)/p$ in Table 1.* It is worth noting that as $(H - p)/H$ tends to zero

$$\lambda = \frac{\frac{1}{2}\rho q^2}{p} = \frac{H - p}{p} + 0\left(\frac{H - p}{H}\right)^2 = \frac{H - p}{H} + 0\left(\frac{H - p}{H}\right)^2. \quad \ldots \quad (14)$$

By means of this relation the final expression (35) for C_D' reduces at once to the standard low speed relation—R. & M. 1688[1], equation (2a).

3. *Some Remarks on the Total Energy.*—Consider steady flow through a wind tunnel containing an aerofoil, on the assumption that the walls of the tunnel and the surface of the aerofoil are perfectly non-conducting. The mass flux Q across any section of the tunnel is $\int dW$ across the section, where

$$dW = \rho q d\sigma, \quad \ldots \quad (15)$$

$d\sigma$ is an element of area of the section, and the direction of q is assumed to be normal to $d\sigma$. The mass flux is the same across any two sections. The difference between the fluxes of the sum of the kinetic and intrinsic energies across the two sections is equal to the difference of the rate at which work is being done by the pressures across the two sections. The rate at which the pressures do work across a section is

$$\int p q d\sigma = \int (p/\rho) dW = \int E_2 dW, \quad \ldots \quad (16)$$

and the rate of flux of kinetic plus intrinsic energy is

$$\int (E_1 + E_3)\, dW. \quad \ldots \quad (17)$$

Hence

$$(1/Q) \int (E_1 + E_2 + E_3)\, dW \quad \ldots \quad (18)$$

is the same across any section of the tunnel,—i.e., the average value of the total energy E is the same across any section of the tunnel.

* If a curve is preferred to a table, $x - \lambda(x)$ should be plotted.

These considerations apply to any real fluid. Moreover, outside the boundary layers and the wake, where the motion is practically irrotational and the effects of viscosity and conductivity negligible, it is known from the theory of the irrotational motion of an ideal fluid that E is practically constant. Thus E is constant across a section upstream of the aerofoil, and the mean value across any section downstream of the aerofoil is equal to the constant value upstream.

Let us now neglect the tunnel walls and consider in more detail the flow past the aerofoil, with particular reference to the determination of profile drag by means of a wake exploration across a section fairly near to the aerofoil. In Fig. 1 let AA be a section sufficiently far upstream for the velocity, pressure and density to be constant across it, these constant values being denoted by V, p_0, ρ_0 respectively. Let BB be a section sufficiently far downstream for the static pressure to have become constant at its upstream value p_0. Let T, T' be the boundaries of the wake at BB, and let $PQST$, $P'\ Q'\ S'\ T'$ be streamlines of the steady flow past the aerofoil. The wake widens downstream, and upstream of BB these streamlines lie entirely outside the wake and the boundary layer of the aerofoil; hence outside these streamlines the motion is practically irrotational, and the influence of viscosity and conductivity is negligible, so the total energy E and the entropy S are constant. (The entropy of a fluid element is affected only by dissipation and internal conduction, which are negligible; hence the entropy is constant along a streamline, and since it is constant at AA it has the same value on all streamlines outside $PQST$, $P'\ Q'\ S'\ T'$). Hence on BB, outside the wake, the density is ρ_0 and the velocity V. Denote the velocity and density at BB inside the wake by ρ and u respectively. Let CC be the section across which the wake is to be explored, cutting the streamlines $PQST$, $P'\ Q'\ S'\ T'$ at S and S'. Denote the velocity, pressure and density at CC, between S and S', by u_1, p_1, ρ_1 respectively. Denote the total heads, stagnation densities and temperatures at AA, BB, CC by H_0, H, H_1, ρ_{H_0}, ρ_H, ρ_{H_1}, and T_0, T, T_1 respectively, as shown in Fig. 1.

The flux of energy across $PQST$ and $P'\ Q'\ S'\ T'$ may be neglected, since viscosity and conduction are negligible there. The flux of energy across the boundary of the aerofoil is zero if its surface is non-conducting, and in any case may be neglected. The drag of the aerofoil does no work, since the motion is referred to axes fixed in the aerofoil. Hence by our previous arguments the average value of E on SS' or TT' is equal to its value E_0 on AA. (It may be noted that there is an increase in the average value of the entropy between PP' and SS', due to the dissipation of kinetic energy into heat energy in the boundary layer of the aerofoil and immediately behind it, or in passage through a shock wave, this process being inevitably involved in the production of drag.)

If E is not constant and equal to E_0 on SS' and TT' then any excess at one place must be balanced by a defect at another place. We shall assume that in fact E is equal to E_0 on SS' and TT'. In §10 the results of an experimental research on the constancy of the stagnation temperature are set out; moreover E is the same on both sides of a shock wave.

4. *Determination of Drag from Wake Explorations.*—From considerations of momentum the drag D per unit length of the aerofoil is given* by

$$D = \int \rho u(V - u)dy \qquad \ldots \qquad (19)$$

where the integral is taken across the wake at the section BB.

* Previously published proofs of the formula use the total-head relation for an incompressible fluid. A proof valid for subsonic compressible flow, even with limited shock waves present is given in the Appendix.

Now let dy in equation (19) be the breadth of a stream-tube, and let its breadth at the section CC be dy_1. If any inclination of the stream at the section CC' to the normal to the section is ignored, it follows from continuity that

$$\rho u dy = \rho_1 u_1 dy_1, \quad \ldots \quad (20)$$

so

$$D = \int \rho_1 u_1 (V - u) dy_1 \quad \ldots \quad (21)$$

and if c is the chord of the aerofoil it is convenient to write for the drag coefficient C_D

$$C_D \; (= D/\tfrac{1}{2}\rho_0 V^2 c) = \int C_D' \; dy_1/c \quad \ldots \quad (22)$$

where

$$C_D' = 2 \frac{\rho_1}{\rho_0} \cdot \frac{u_1}{V}\left(1 - \frac{u}{V}\right). \quad \ldots \quad (23)$$

In the expressions (21) and (22) the integrals are taken across the wake at the section CC, and u is the velocity at the section BB on the streamline through the point at which the velocity is u_1 at the section CC.

It is required to express C_D' in terms of the observable quantities p_1 and H_1. In addition to the assumption that on SS' and TT' the total energy E is constant and equal to E_0, we now make the same assumption as that made by B. M. Jones in R. & M. 1688[1] for an incompressible fluid. We assume that for the purposes of calculation mean streamlines may be drawn in the wake such that between SS' and TT' the total head is constant along each stream-tube. This assumption, when E is assumed constant, is exactly equivalent to the assumption that the entropy is constant along each stream-tube.* For from equation (9) (applied to the three sections AA, BB and CC) and the constancy of E it follows that

$$H/\rho_H = H_1/\rho_{H_1} = H_0/\rho_{H_0} \quad \ldots \quad (24)$$

hence if $H = H_1$ at points on the same streamline it follows that $\rho_H = \rho_{H_1}$, and

$$\frac{H}{\rho_H^{\gamma}} = \frac{H_1}{\rho_{H_1}^{\gamma}}, \quad \ldots \quad (25)$$

i.e. the entropy is the same at points on the same stream-line. Conversely if (24) and (25) hold, then $H = H_1$ and $\rho_H = \rho_{H_1}$.

It follows from (10) and from the constancy of T_H that

$$\tfrac{1}{2}u^2 = C_p(T_{H_0} - T), \quad \ldots \quad (26)$$

$$\tfrac{1}{2}V^2 = C_p(T_{H_0} - T_0), \quad \ldots \quad (27)$$

$$\tfrac{1}{2}u_1^2 = C_p(T_{H_0} - T_1). \quad \ldots \quad (28)$$

---

* The extension of Jones' method to compressible flow on the assumption of constant total energy everywhere and constant entropy and total head along each assumed stream-tube in the wake was considered by A. D. Young in Ref. 2, which includes the expansion of C_D' as far as the term in $(V/a_0)^2$ given in eqn. (53). In Ref. 3 Young gave an exact expression for C_D'. His arrangement of the expression and methods of computation are considered more troublesome for the same accuracy than the methods described here.

From equations (10) and (13) it follows that the conditions in the free stream at AA are determined by the value λ_0 of λ at that section according to the relation

$$\tfrac{1}{2}\rho_0 V_0^2/p_0 = \tfrac{1}{2}\gamma M_0^2 = \lambda_0 \qquad \ldots \quad (29)$$

where

$$\lambda_0 = \lambda\left(\frac{H_0 - p_0}{p_0}\right)$$

is to be taken from Table 1. M_0 is tabulated as a function of $(H_0 - p_0)/p_0$ in Table 5.

In evaluating the expression for the drag it is convenient to make use of a fictitious temperature T_2 and value λ_2 of λ defined by

$$T_{H_0}/T_2 = (H_0/H_1)^\beta,$$

$$\lambda_2 = \lambda\left(\frac{H_0 - H_1}{H_1}\right) = \frac{1}{\beta}\cdot\frac{(T_{H_0} - T_2)}{T_2}. \qquad \ldots \quad (30)$$

Then by (12)

$$\frac{T_{H_0}}{T_2} = \left(\frac{H_0}{p_0}\right)^\beta\left(\frac{p_0}{H_1}\right)^\beta = \left(\frac{H_0}{p_0}\right)^\beta\left(\frac{p_0}{H}\right)^\beta$$

$$= \frac{T_{H_0}}{T_0}\cdot\frac{T}{T_{H_0}} = \frac{T}{T_0}. \qquad \ldots \quad (31)$$

Thus T_2 represents a proportional loss of stagnation temperature equal to the proportional gain of actual temperature in the wake. By (26), (27) and (31),

$$1 - \frac{u^2}{V^2} = \frac{T - T_0}{T_{H_0} - T_0} = \frac{T - T_0}{T_0}\cdot\frac{T_0}{T_{H_0} - T_0} = \frac{T_{H_0} - T_2}{T_2}\cdot\frac{T_0}{T_{H_0} - T_0} = \frac{\lambda_2}{\lambda_0}. \qquad \ldots \quad (32)$$

Again the term in u_1 in (23) involves the value λ_1 of λ at section CC. By (27), (28), (13) and (12)

$$\lambda_1 = \lambda\left(\frac{H_1 - p_1}{p_1}\right), \qquad \ldots \quad (33)$$

$$\frac{u_1^2}{V^2} = \frac{T_H - T_1}{T_H - T_0} = \frac{\lambda_1 T_1}{\lambda_0 T_0} = \frac{\lambda_1}{\lambda_0}\cdot\left(\frac{p_1}{H_1}\right)^\beta\left(\frac{H_0}{p_0}\right)^\beta \qquad \ldots \quad (34)$$

and by (11) and (12)

$$\frac{\rho_1}{\rho_0} = \frac{p_1}{p_0}\cdot\frac{T_0}{T_1} = \frac{p_1}{p_0}\cdot\left(\frac{p_0}{p_1}\right)^\beta\left(\frac{H_1}{H_0}\right)^\beta.$$

Finally substituting in (23)

$$C_D' = 2\left(\frac{H_1}{H_0}\right)^{(\gamma-1)/2\gamma}\left(\frac{p_1}{p_0}\right)^{(\gamma+1)/2\gamma}\left(\frac{\lambda_1}{\lambda_0}\right)^{1/2}\left\{1 - \left(1 - \frac{\lambda_2}{\lambda_0}\right)^{1/2}\right\}. \qquad \ldots \quad (35)$$

The expression in { } is tabulated as a function of (λ_2/λ_0) in Table 4; for small values of $(H_0 - H_1)/H_0$ or λ_2/λ_0 it is equal to

$$\tfrac{1}{2}(\lambda_2/\lambda_0) + 0(\lambda_2/\lambda_0)^2.$$

Also $(\gamma - 1)/2\gamma = 1/7$ and $(\gamma + 1)/2\gamma = 6/7$; values of $(H_1/H_0)^{1/7}$ and $(p_1/p_0)^{6/7}$ are tabulated in Tables 2 and 3.

The expression (35) for the drag coefficient has the following advantages connected with the evaluation of the last factor in { }. It evaluates λ_0 and λ_2 as functions of ratios of the observed pressures by means of the single entry Table 1 (or a single curve) and evaluates

the expression in { } as a function of the ratio λ_2/λ_0 by the single entry Table ~~2~~ 4. Any other nominally exact method would involve a double entry table or family of curves, and would lose accuracy when H_1 is nearly equal to H_0 (as it always is near the edge of the wake) and when M_0 is small; in the former case the expression $1 - (\lambda_2/\lambda_0)$ is nearly unity and must therefore be worked out to considerable accuracy; in the latter case both λ_2 and λ_0 become small. Simpler approximate methods are in fact generally used in practice [9, 10, 11,] but the present method is useful in extreme cases and as a standard of comparison of high nominal accuracy.

When V/a_0 is small, λ_0, λ_1 and λ_2 are all small. In this case we show that (22) and (35) reduce to the formula given by B. M. Jones in R. & M. 1688,[1] and we find the first correction term. In conformity with the notation used in R. & M. 1688, write

$$g = \frac{H_1 - p_0}{H_0 - p_0}, \quad p = \frac{p_1 - p_0}{H_0 - p_0}; \qquad \ldots \qquad (36)$$

g and p then have the same meanings as in R. & M. 1688. Also write temporarily

$$\frac{H_0 - p_0}{p_0} = x. \qquad \ldots \qquad (37)$$

By the definition of λ, (13),

$$\lambda(x) = \beta^{-1}\{(x+1)^\beta - 1\}$$

$$= x - \frac{1}{2\gamma}x^2 + \frac{1}{3!}\cdot\frac{1}{\gamma}\left(1+\frac{1}{\gamma}\right)x^3 - \frac{1}{4!}\cdot\frac{1}{\gamma}\left(1+\frac{1}{\gamma}\right)\left(2+\frac{1}{\gamma}\right)x^4 \ldots \qquad (38)$$

so that from the definition of λ_0, (29), (37) and (38)

$$\lambda_0 = x - \frac{1}{2\gamma}x^2 + \ldots, \quad x = \lambda_0 + \frac{1}{2\gamma}\lambda_0^2 + \ldots \qquad (39)$$

Then

$$\frac{p_0}{H_0} = \frac{1}{1+x}, \qquad \ldots \qquad (40)$$

$$\frac{H_1}{H_0} = \frac{1+gx}{1+x} = 1 - (1-g)x + \ldots = 1 - (1-g)\lambda_0 + \ldots, \ldots \qquad (41)$$

$$\frac{p_1}{p_0} = 1 + px = 1 + p\lambda_0 + \ldots, \qquad \ldots \qquad (42)$$

so

$$\left(\frac{H_1}{H_0}\right)^{(\gamma-1)/2\gamma} = 1 - \frac{\gamma-1}{2\gamma}(1-g)\lambda_0 + \ldots, \qquad \ldots \qquad (43)$$

$$\left(\frac{p_1}{p_0}\right)^{(\gamma+1)/2\gamma} = 1 + \frac{\gamma+1}{2\gamma}p\lambda_0 + \ldots, \qquad \ldots \qquad (44)$$

Also

$$\frac{H_0 - H_1}{H_1} = \frac{(1-g)x}{1+gx} = (1-g)\{x - gx^2 + \ldots\}$$

$$= (1-g)\left\{\lambda_0 + \left(\frac{1}{2\gamma} - g\right)\lambda_0^2 + \ldots\right\}. \qquad \ldots \qquad (45)$$

and hence, from (38) and (30),

$$\lambda_2 = (1-g)\left\{\lambda_0 + \left(\frac{1}{2\gamma} - g\right)\lambda_0^2 - \frac{1}{2\gamma}(1-g)\,\lambda_0^2 + \ldots\right\}$$

$$= (1-g)\left\{\lambda_0 - \left(1 - \frac{1}{2\gamma}\right)g\lambda_0^2 + \ldots\right\}, \quad \ldots \quad (46)$$

so

$$1 - \frac{\lambda_2}{\lambda_0} = g\left\{1 + \left(1 - \frac{1}{2\gamma}\right)(1-g)\,\lambda_0 + \ldots\right\} \quad \ldots \quad (47)$$

and

$$1 - \left(1 - \frac{\lambda_2}{\lambda_0}\right)^{1/2} = 1 - g^{1/2} - \tfrac{1}{2}\left(1 - \frac{1}{2\gamma}\right)g^{1/2}(1-g)\,\lambda_0 + \ldots$$

$$= (1 - g^{1/2})\left\{1 - \tfrac{1}{2}\left(1 - \frac{1}{2\gamma}\right)(g^{1/2} + g)\,\lambda_0 + \ldots\right\}. \quad \ldots \quad (48)$$

Finally

$$\frac{H_1}{p_1} = \frac{1 + gx}{1 + px},$$

$$\frac{H_1 - p_1}{p_1} = \frac{(g-p)x}{1+px} = (g-p)\,\{x - px^2 + \ldots\}$$

$$= (g-p)\left\{\lambda_0 + \left(\frac{1}{2\gamma} - p\right)\lambda_0^2 + \ldots\right\}, \quad \ldots \quad (49)$$

and from (38) and (33)

$$\lambda_1 = (g-p)\left\{\lambda_0 + \lambda_0^2\left[\frac{1}{2\gamma}(1-g) - \left(1 - \frac{1}{2\gamma}\right)p\right] + \ldots\right\}, \quad \ldots \quad (50)$$

so

$$\left(\frac{\lambda_1}{\lambda_0}\right)^{1/2} = (g-p)^{1/2}\left\{1 + \tfrac{1}{2}\lambda_0\left[\frac{1}{2\gamma}(1-g) - \left(1 - \frac{1}{2\gamma}\right)p\right] + \ldots\right\}. \quad \ldots \quad (51)$$

From (35), (43), (44), (48) and (51) it now follows that, correct to the first power of λ_0

$$C_D' = 2(g-p)^{1/2}(1 - g^{1/2})\left\{1 + \frac{\lambda_0}{4\gamma}[3 - 2\gamma + 3p - 2g - (2\gamma - 1)g^{1/2}]\right\} \quad \ldots \quad (52)$$

i.e., from (29)*

$$C_D' = 2(g-p)^{1/2}(1 - g^{1/2})\left\{[1 + \tfrac{1}{8}(M_0)^2[3 - 2\gamma + 3p - 2g - (2\gamma - 1)g^{1/2}]\right\}. \quad \ldots \quad (53)$$

Thus λ_0, λ_1, λ_2 are calculated from (29), (33) and (30) with the help of Table 1 ; C_D' is calculated from (35) with the help of Tables 2, 3 and 4 ; for small values of M_0, C_D' is calculated from (53), where g and p are defined in (36).

5. *Apparatus.*—(*a*) *High-Speed Wind Tunnel and Model Aerofoils.*—The working section of the High-Speed Wind Tunnel (Fig. 2) included† about 17 in. of steel tube of 1 ft. diameter. The tunnel was vertical and the air flowed upwards. The working section may be considered to extend from the end of the intake flare to the injector slot.

A model aerofoil of standard size has a chord of 2 in. The aerofoils crossed the working section horizontally 8 in. above the end of the intake flare.

---

* Formula (53) was given by A. D. Young in Reference 2.

† The tunnel has been modified and the length of the working section increased since the completion of the experiments described in this report.

(*b*) *Pitot Tubes.*—In most of the earlier pitot traverse experiments a single pitot tube was used. It was mounted on a streamline bar (Figs. 3 and 4) which crossed the jet horizontally and at right angles to the span of the aerofoil, the centre line of the bar being 4·1 in. above the centre line of the aerofoil. The pitot tube was traversed across the wake by a micrometer screw.

The standard length of the pitot tube was 1·0 in.; the mouth of the tube was 1·7 in. behind the trailing edge of the aerofoil. A few observations were taken with a pitot tube 2·3 in. long (Fig. 5) with its orifice 0·4 in. behind the trailing edge.

(*c*) *Static-Pressure Tubes.*—The static-pressure tubes used are shown in Figs. 4 and 5. The distances of the static holes from the trailing edge of an aerofoil were considered to be sufficiently nearly equal to the distances of the mouths of the corresponding pitot tubes. In the longer pitot tube the static holes were, in fact, 0·4 in. behind the trailing edge, and since the length of the tube beyond the static holes was 0·2 in., the point of the tube was only 0·2 in. behind the trailing edge. A closer approach was considered inadvisable. (The diameter of the working portion of the longer static tube was 0·035 in., so the length beyond the static holes was about 5½ diameters.)

(*d*) *Comb of Pitot Tubes.*—Some additional observations were made with the comb of pitot tubes shown in Fig. 4. The tubes were flattened at the ends* so that the effective internal width was reduced to 0·005 in., the external width being 0·02 in. (A rather larger width is considered advisable because of the sluggishness of the readings.) The five inner tubes had spacings between 0·07 in. and 0·09 in. across the wake, but were staggered so that the total separation was not less than 0·1 in.; the outer tubes were more widely spaced in order to cover the wake of a shock wave at high speeds, the outermost tube on one side being 2 in. from the centre. The central tubes were not close enough together to give sufficient detail at low speeds, so the comb was traversed by the micrometer screw to a series of positions (usually three positions at intervals of 0·025 in.). The length of the tubes in the comb was 0·95 in.

(*e*) *Manometers.*—The pressure in the single pitot tube was read against the pressure of the atmosphere (which was equal to the total head in the tunnel outside the wake) on a 3-ft. vertical water manometer, except in the case of the readings near the centre of the wake at the highest tunnel speeds, for which a mercury manometer was used. The tubes in the comb of pitot tubes were connected to a vertical multiple water manometer reading up to 5 ft. of water, the range again being sufficient except at the highest speed. The static-pressure tubes were read on a water manometer against a standard pressure hole in the tunnel wall, 5·4 in. upstream of the centre line of the model aerofoil. (This pressure hole is used, apart from a correction for tunnel wall interference (*see* §7), to determine the air speed in the tunnel.)

6. *Correction for Finite Diameter of Pitot Tube.*—When there is a transverse gradient of total head across the mouth of a pitot tube the effective centre of the tube is displaced from the geometrical centre towards the region of higher velocity, so that the area under the total pressure curve is less than it should be, and for the tubes described in §5 it is sufficiently accurate, at low speeds, to take this displacement as 0·18 times the external diameter of the tube[4]. This correction was applied both at low and at high speeds; there is no direct experimental evidence of its validity at high speeds, but the relative importance of the correction diminishes rapidly with increase of speed above the shock stall because of the increase in the drag coefficient C_D.

C_D is the area under the curve of C_D' against y, where y is distance across the wake in chords (*see* equation (22)); the correction amounts to increasing the arithmetical value of the abscissa at every point by 0·18 times the diameter of the tube divided by the chord of the aerofoil, and this is true for the parts of the curve on both sides of the maximum ordinate. Hence to apply the correction it is necessary only to increase C_D by 0·36 times the maximum ordinate of the C_D' curve times the diameter of the tube divided by the chord.

* The ends of the single pitot tubes were not flattened since they had to be screwed into the traversing bar when it was in position in the tunnel.

7. *Correction for Tunnel Interference.*—The correction for tunnel wall interference with a 2-in. chord aerofoil in a 1-ft. tunnel is small at low speeds, even for fairly high lift coefficients, but above the compressibility stall, with shock waves present, the correction is much greater.

Information on the magnitude of the correction was obtained from drag determinations by the pitot traverse method on two models, of 2-in. chord and 1·2-in. chord respectively, of the aerofoil N.A.C.A.0020 at zero incidence. The results are shown in Fig. 6. The fairly good agreement for values of M_0 between about 0·4 and 0·65 shows that for these speeds the correction is small. (The discrepancy at lower speeds is presumably due to variation of C_D with Reynolds number.) The difference in the uncorrected values of C_D for the two models becomes large at larger values of M_0, but since C_D is increasing rapidly the difference in the values of M_0 for a given C_D is still small.

In order to deduce from the results a method of working out the correction for other aerofoils, pressure readings were taken not only at the standard pressure hole A in the wall, 5·4 in. upstream of the centre line of the model aerofoil, but also at a hole B exactly opposite the centre line; and values of M_0 were deduced from these pressures by formula (29). Denote these values by M_{AL} and M_{BL} for the 2-in. chord aerofoil, and by M_{AS}, M_{BS} for the 1·2-in. chord aerofoil. Let M_0 denote the equivalent value in an unbounded stream. Then if we write

$$\frac{M_{BL} - M_0}{M_0 - M_{AL}} = \frac{M_{BS} - M_0}{M_0 - M_{AS}} = \mu, \qquad (54)$$

the theoretical value of μ is 2 for two-dimensional flow (an aerofoil spanning a rectangular tunnel) at low speeds.[5] We assume that for an aerofoil spanning a circular tunnel μ is a constant, even when shock waves are present, and deduce its value experimentally. We define equivalent speeds for the two models as speeds at which the drag divided by the chord is the same; elimination of M_0 from equations (54) yields the equation

$$\mu = \frac{M_{BL} - M_{BS}}{M_{AS} - M_{AL}}, \qquad (55)$$

and the sixth column of the table below gives values of μ for four values of the ratio drag/(chord × atmospheric pressure × tunnel diameter), corresponding to values of the drag coefficient from 2 to 6 times the low-speed value. The values of M_0 corresponding to these values of μ, deduced from the equation

$$M_0 = \frac{\mu}{1+\mu} M_{AL} + \frac{1}{1+\mu} M_{BL}, \qquad (56)$$

are shown in the seventh column; values of M_0 with $\mu = 1·5$ throughout, so that

$$M_0 = 0·6\, M_{AL} + 0·4\, M_{BL}, \qquad (57)$$

are shown in the eighth column, and the differences from the values in the seventh column are negligible. Hence equation (57) may be used to correct for tunnel interference.

Drag ÷ (Chord × atmospheric pressure × tunnel diameter)	M_{AL}	M_{BL}	M_{AS}	M_{BS}	μ	M_0	M_0 ($\lambda = 1·5$)
0·0373	0·767	0·875	0·800	0·825	1·515	0·810	0·810
0·0280	0·758	0·838	0·785	0·801	1·370	0·792	0·790
0·0187	0·746	0·806	0·767	0·777	1·381	0·772	0·770
0·0093	0·726	0·770	0·739	0·743	2·077	0·740	0·744

A curve of C_D against M_0, corrected by equation (57), is also shown in Fig. 6. The above correction applies to the circular high-speed tunnel both before and after modification.*

* See footnote on page 8.

It may be remarked that a static-pressure drop along the tunnel would have no effect on the determination of drag by the pitot-traverse method. Since equation (57) was derived from such determinations, it should be independent of static-pressure drop. It should be applicable to other pitot-traverse drag determinations in the tunnel, whatever the static-pressure drop may be.

8. *Pitot-Traverse Curves above and below the Shock Stall.*—Curves of total head drop, $H_0 - H_1$, in inches of water, against distance from the centre of the wake in chords are shown in Fig. 7a for a traverse at 0·2 chord behind the trailing edge of a model of the symmetrical aerofoil N.A.C.A. 0012 (12 per cent. thick). The traverses were taken at zero incidence, and are shown at two speeds, one below and the other above, the shock stall. Similar curves are shown in Fig. 7b for the 20 per cent. thick aerofoil N.A.C.A. 0020.

At speeds below the shock stall the shapes of the curves are the same as at low speeds, the effects of changes of Reynolds number being small. Above the shock stall the curves have widened (and the drag coefficient has correspondingly increased rapidly), and the outer parts of the curves have a marked sideways extension with a fairly low pressure difference. Thus in Fig. 7a the wake may be considered to be about 0·08 chords wide below the shock stall; above the shock stall it is wider than 0·8 chords.

The sideways extension of the curves represents the wake of a limited shock wave attached to the aerofoil; but a marked thickening or a breakaway of the boundary layer may also be present, being associated with the presence of the shock wave. It is not possible to distinguish with any certainty where the wake due to thickening or breakaway of the boundary layer merges into the wake of the shock wave, but the fact that for the thicker section the bends between the central and outer parts of the curves are less abrupt than for the thinner section indicates that boundary layer effects are more important with thick than with thin sections.

9. *Thermocouples for the Measurement of Stagnation Temperature.*—Since the total energy E is the product of the specific heat at constant pressure C_p and the stagnation temperature T_H (§2, equation (9)), considerable interest attaches to measurements of T_H.

After several unsuccessful attempts to design an instrument to measure T_H, a satisfactory instrument (Fig. 8) was developed with the help of suggestions from Mr. G. E. Kerr and Professor G. I. Taylor. The instrument consists of an ebonite pitot tube 1·2 in. long with an outside diameter 0·15 in., mounted at right angles to a streamline bar similar to that used for total-head and static-pressure explorations, so that it can be traversed across a wake over the same path as the pitot and static-pressure tubes. A single thermojunction of 30 S.W.G. iron-eureka wire was situated 0·25 in. from the mouth of the tube, and the wires were carried through the tube and the traversing bar to the outside of the tunnel. The tube was pierced with holes 0·5 in. from its mouth so that air could flow past the thermojunction; the velocity of the flow past the thermojunction must not be large enough to cause the recorded temperature to depart appreciably from the stagnation temperature, but subject to this condition a large flow of air is favourable in order to ensure complete control of the temperature of the thermojunction by the air flowing through the tube; a velocity of the order of 100 ft. per second appears reasonable. The rate of flow was not measured; it was considered sufficient to ensure that the reading of the instrument when calibrated in the empty tunnel should be independent of tunnel speed.

Two pitot thermocouples A and B were mounted on the traversing bar 1·5 in. apart, and (except at the highest speeds) B was outside the wake when A was traversed across it. A and B were each read against a thermojunction situated in a low velocity region in the intake. The voltage was read on a vernier potentiometer, sensitive to one microvolt, i.e., to 1/(52·6) of a degree centigrade.

The thermocouples were calibrated in the empty tunnel with several sizes of leak, and calibration curves for three different leaks are shown at the top of Fig. 9. As a result of these calibrations the leak finally adopted was a single hole with a diameter of 0·03 in.; this leak

appears to give less variation with tunnel speed than a larger or a smaller leak. For the thermocouple finally adopted there was an unexplained difference of temperature of nearly 1°C. in the empty tunnel between the readings of the pitot thermocouple and the intake thermocouple at speeds above $M_0 = 0 \cdot 3$; at lower speeds consistent readings could not be obtained.

It may be of interest to mention that in earlier types of thermocouple there was no flow through the tube, and the thermojunction was situated at the mouth of the tube. The readings in the empty tunnel were rather erratic, and the calibration curves had an appreciable slope. A calibration for a thermojunction at the upstream end of a pointed projection is shown in Fig. 9[6].

For comparison with the temperature differences shown in the calibration curves in Fig. 9, it may be mentioned that when the absolute temperature in the intake is T_0, the drop in the actual temperature of the air from the intake to the working section is $M_0^2 T_0/(5 + M_0^2)$. Thus for $M_0 = 0 \cdot 7$ and an intake temperature of 16°C., the drop is 26°C.

After calibration the thermocouples A and B, each of the design finally adopted (Fig. 8), were traversed across the wake behind the aerofoil N.A.C.A. 0020 at zero incidence at values of M_0 ranging from $0 \cdot 458$ to $0 \cdot 756$. The main difficulty in the experiments was caused by irregular fluctuations of temperature in the tunnel intake; these fluctuations were sometimes much greater than the small temperature differences to be measured, so in order to obtain satisfactory results advantage had to be taken of favourable weather and temperature conditions. In addition, in order to reduce as far as possible the effects of fluctuations and of instrumental errors, simultaneous readings, a_1 and b_1 were taken with the thermocouples A and B respectively, with the aerofoil in place, A being inside and B outside the wake. Readings a_0 and b_0 were then taken with A and B with the aerofoil removed, and the final reading was taken to be $(a_1 - a_0) - (b_1 - b_0)$. Ideally the stagnation temperature should be the same as in the intake both outside the wake and in the empty tunnel, i.e., b_1, a_0, b_0 should all be zero, so if there were no fluctuations or instrumental errors $a_1 - a_0 - b_1 + b_0$ should give the correct readings. The most likely sources of error are (i) calibration differences between the two instruments A and B; (ii) fluctuations with time; (iii) a difference in the readings of the intake and pitot thermocouples, such as is shown in the calibration curves in Fig. 9. Of these sources of error (i) would affect $a_1 - b_1$ and $a_0 - b_0$ separately, but should not affect the double difference; (ii) would affect $a_1 - a_0$ and $b_1 - b_0$ (since the readings a_1, b_1 and a_0, b_0 were not taken simultaneously) but the effect should at any rate be much lessened by taking the double difference; the effect of (iii) should also be eliminated by taking the double difference. Hence the effects of all three sources of error may be best eliminated by using the double difference $a_1 - a_0 - b_1 + b_0$ for the final reading.

10. *Stagnation Temperature Measurements in a Wake.*—Results of measurements of stagnation temperature at five values of M_0 across a section of the wake behind a brass model of the aerofoil N.A.C.A. 0020 at zero incidence are shown in Fig. 10. The aerofoil had a 2-in. chord, and the end of the thermojunction was $1 \cdot 75$ in. from the trailing edge. The readings a_1 of the thermojunction A traversed through the wake, the corresponding readings a_0 in the empty tunnel, and the doubly corrected readings $a_1 - a_0 - b_1 + b_0$ are shown separately.

The curves show that the stagnation temperature, referred to the value* outside the wake as datum, is negative in the centre of the wake and positive at the sides. For values of M_0 up to about $0 \cdot 63$ the maximum difference from zero is of the order of $\frac{1}{2}$°C., while the mean value across the wake is practically zero; at $M_0 = 0 \cdot 756$ the maximum value is 1°C. and the mean value is less than $\frac{1}{2}$°C. Variations of the stagnation temperature of these magnitudes will not cause appreciable errors in the values of the drag coefficient deduced by the method described in §4 on the assumption of constant total energy.

The doubly corrected results of the measurements of stagnation temperature at $M_0 = 0 \cdot 458$, $0 \cdot 576$, $0 \cdot 756$ are drawn again in Fig. 11, where curves of C_D' (§4, equation (36)) over a section $1 \cdot 7$ in. behind the trailing edge of the same aerofoil are shown for comparison. (The horizontal

* The mean value of the stagnation temperature across a section of the wake (strictly speaking weighted with the product of the velocity and the density) is theoretically equal to the value outside the wake (cf. §3).

scales are the same for the two sets of curves, but the zeros were not determined, and the peaks of corresponding curves have been placed over one another). For the two lower values of M_0 the widths over which the stagnation temperature and C_D' (and therefore the total-head loss in the wake) differ from zero are in good agreement. A curve of C_D' at $M_0 = 0 \cdot 756$ was not available; curves are shown for $M_0 = 0 \cdot 717$ and $M_0 = 0 \cdot 762$. There is some evidence that the width of the "total-head wake" at $M_0 = 0 \cdot 762$ was considerably greater than the width of the "stagnation temperature" wake at $M_0 = 0 \cdot 756$; the values of M_0 are not very different, and it is significant that the sideways extension of the "total-head wake" is attributable to shock waves and that theoretically the stagnation temperature does not change across a shock wave.

Some measurements taken with an earlier (and unsatisfactory) type of thermocouple are of interest, since they showed no difference between traverses of stagnation temperature across the wake behind the metal aerofoil and behind one made of tufnol, which is a good thermal insulator. These measurements therefore showed that even for a metal aerofoil the effect on the total energy of conduction across the aerofoil surface is negligible.

11. *The Results of Traverses at Different Distances behind an Aerofoil.*—Values of the drag coefficient C_D deduced from traverses 0·85 chord and 0·2 chord, respectively, behind the trailing edge of a 2-in. model of the aerofoil N.A.C.A. 0020 at zero incidence are shown in Fig. 12. The agreement is fairly satisfactory.

12. *Comparison with Drag Measured on a Balance.*—When the drag of an aerofoil is measured on the electric balance in use with the working section of the circular High-Speed Tunnel, there is an uncertain increase of drag on the end portions of the aerofoil in the tunnel boundary layer. For this reason a tapered aerofoil was selected for a comparison of the drag coefficients measured on the balance and deduced from wake explorations. The aerofoil had a chord of 2·1 in. and a thickness-chord ratio 0·37 in the middle, and a chord of 1·42 in. and a thickness-chord ratio 0·14 near the ends.* The effect of the tunnel boundary layer on the drag of this aerofoil is therefore likely to be a smaller fraction of its total drag than for an aerofoil of uniform chord and thickness.

The comparison is shown in Fig. 13. For values of M_0 between 0·3 and 0·65 the drag as measured on the balance is from 5 to 12 per cent. higher than the drag deduced from wake explorations; at $M_0 = 0 \cdot 7$ the difference is almost 25 per cent. At $M_0 = 0 \cdot 39$, 0·55 and 0·675 the wake explorations included traverses at a distance of only $\frac{1}{4}$ in. from the tunnel wall; these traverses suggested an upper limit to the end effects of about 25 per cent. at these speeds, and the pitot-traverse results with the maximum possible allowance for end effects are shown by crosses in Fig. 13. At higher speeds no observations were made close to the ends. The results show that, at any rate in the lower range of speeds, the discrepancy is amply accounted for by end effects.

13. *Effect of Condensed Moisture.*—Most of the experiments described in the present paper were made in the original circular High-Speed Tunnel, which drew its air supply from the interior of the compressed-air tunnel building. Effects of condensation of moisture are much more pronounced in the present circular tunnel, as a result of the fact that its air supply is drawn more nearly directly from outside the building, and also on account of its greater length of working section. It takes an appreciable fraction of a second for supersatured air to condense into moisture.

The effect of condensation has been considered in an unpublished paper, 7482[12]. It is hoped in the near future to reduce the condensation considerably by fitting return ducts to the

* Further details will be found in Reference 8.

High-Speed Tunnels, and using the relatively dry compressed-air supply. The rest of the present paper has therefore been left as originally written with the understanding that the arguments apply strictly in the absence of condensation only.

14. *Conclusion.*—Measurements of the stagnation temperature in the wake behind an aerofoil, together with theoretical arguments, suggest that it is sufficiently accurate to calculate the profile drag of an aerofoil from the results of wake measurements of total head and static pressure on the assumption that the total energy is constant. It is further assumed that for the purposes of calculation mean streamlines may be drawn in the wake along each of which the total head (or the entropy) is constant, and formulae are developed for deducing the profile drag coefficient from total-head and static-pressure traverses. Traverses at 0·85 chord and 0·20 chord behind the trailing edge of an aerofoil produced results in fairly satisfactory agreement. Discrepancies between values of the drag deduced from wake explorations and measured on a balance are satisfactorily accounted for by end effects on the portions of the aerofoil in the tunnel boundary layer.

15. *Acknowledgment.*—The authors are indebted to Miss G. Hyde for assistance in the experimental work and the reduction of the observations.

APPENDIX.

Drag in Subsonic Compressible Flow.

In two-dimensional flow past a fixed cylindrical body the drag D per unit length on the body is given by the formula

$$D = \int (p_0 - p)dy + \int \rho u(U - u)dy, \qquad (1)$$

where p and ρ are the static pressure and density of the fluid at any point, p_0 and U are the undisturbed static pressure and velocity upstream, u is the component of fluid velocity at any point parallel to the undisturbed flow, and the integrals are taken along straight lines across the wake and at right angles to the undisturbed flow.

Previously published proofs of this formula refer only to an incompressible fluid of constant density, and use the total head relation. (See, for example, reference 7.)

The following proof is simple, and is valid for subsonic compressible flow, with limited shock waves present.

Take the axis of x in the direction of the undisturbed flow. Denote by u and v the components of fluid velocity and let

$$u = U + u'.$$

By the momentum theorem

$$D = -\int p\, l\, ds - \int \rho(lu + mv)u\, ds$$

$$= -\int p\, dy - \int \rho\, u^2\, dy + \int \rho\, uvdx \qquad (2)$$

round any circuit enclosing the body. (l, m denote the direction cosines of the outward-drawn normal to the circuit, and $lds = dy$, $mds = -dx$).

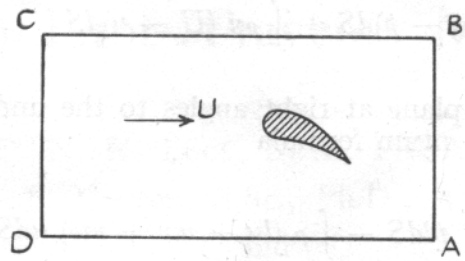

Take the integrals round a rectangle $ABCD$, where BC and AD are parallel to the axis of x, and AB cuts the wake.

By continuity

$$\int \rho\,(lu + mv)ds = \int \rho u\,dy - \int \rho v\,dx = 0,$$

$$\text{i.e., } \int_D^A \rho v\,dx - \int_C^B \rho v\,dx = \int_A^B \rho u\,dy - \int_D^C \rho u\,dy. \qquad (3)$$

From equation (2)

$$D = \int_D^C p dy - \int_A^B p dy + \int_D^C \rho u^2\,dy - \int_A^B \rho u^2\,dy + \int_D^A \rho uv dx - \int_C^B \rho uv dx. \qquad (4)$$

Also

$$\int_D^A \rho uv dx - \int_C^B \rho uv dx = U\,[\int_D^A \rho v dx - \int_C^B \rho v dx\,] + \int_D^A \rho u' v dx - \int_C^B \rho u' v dx$$

$$= U\,[\int_A^B \rho u dy - \int_D^C \rho u\,dy] + \int_D^A \rho u' v dx - \int_C^B \rho u' v dx \text{ (from (3))}. \qquad (5)$$

Substitute from (5) into (4), and let CD tend to infinity upstream.

Then

$$\int_D^C p dy - \int_A^B p dy \to \int_A^B (p_0 - p)\,dy, \qquad (6)$$

and

$$\int_D^C \rho u\,(U - u)dy \to 0, \qquad (7)$$

since in the limit $p = p_0$, $u = U$ on CD. Hence

$$D = \int_A^B (p_0 - p)dy + \int_A^B \rho u(U - u)\,dy + \int_D^A \rho u' v dx - \int_C^B \rho u' v dx. \qquad (8)$$

Now let BC, AD tend to an infinite distance from the body. Then on BC and AD, u' and v are at most of order r^{-1}, where r denotes distance from a fixed point of the body. Hence

$$\int_C^B \rho u' v dx \to 0, \qquad \int_D^A \rho u' v dx \to 0,$$

and

$$D = \int_A^B (p_0 - p)dy + \int_A^B \rho u(U - u)dy. \qquad (9)$$

A similar proof shows that the drag D of any solid body in three-dimensional flow is given by the formula

$$D = \int (p_0 - p)dS + \int \rho u\,(U - u)dS \quad \ldots \quad \ldots \quad \ldots \quad \ldots \quad (10)$$

where the integrals are over a plane at right angles to the undisturbed flow and cutting the wake. We start from the momentum formula

$$D = -\int pldS - \int \rho\,(lu + mv + nw)\,udS$$

where the integrals are over any surface S enclosing the body. For S we take a right cylinder, with its flat ends at right angles to the undisturbed flow and upstream and downstream of the body respectively. If we denote the upstream and downstream ends by 1 and 2 respectively, and the curved surface by S', then on 1 we have $l = -1$, $m = n = 0$, on 2 we have $l = 1$, $m = n = 0$, and on S', $l = 0$. Also by the equation of continuity

$$\int \rho(lu + mv + nw)dS = \int_2 \rho udS - \int_1 \rho udS + \int_{S'} \rho(mv + nw)dS = 0. \quad \ldots \quad \ldots \quad \ldots \quad (11)$$

Hence

$$D = \int_1 (p + \rho u^2)dS - \int_2 (p + \rho u^2)dS - \int_{S'} \rho u(mv + nw)dS$$

$$= \int_1 (p + \rho u^2)dS - \int_2 (p + \rho u^2)dS - U[\int_1 \rho udS - \int_2 \rho udS]$$

$$- \int_{S'} \rho u'\,(mv + nw)\,dS. \quad \ldots \quad \ldots \quad \ldots \quad \ldots \quad \ldots \quad \ldots \quad (12)$$

Now let the upstream end of the cylinder tend to infinity. Then

$$D = \int_2 (p_0 - p)\,dS + \int_2 \rho u\,(U - u)dS - \int_{S'} \rho u'\,(mv + nw)dS \quad \ldots \quad (13)$$

Finally let the curved surface tend to infinity. On the curved surface u', v,w are at most of order r^{-2}, and

$$\int_{S'} \rho u'\,(mv + nw)dS = 0.$$

Hence

$$D = \int_2 (p_0 - p)dS + \int_2 \rho u(U - u)dS. \quad \ldots \quad \ldots \quad \ldots \quad \ldots \quad (14)$$

REFERENCES

No.	Author	Title
1	Cambridge University Aeronautics Laboratory.	The Measurement of Profile Drag by the Pitot Traverse Method. R. & M. 1688. 1936.
2	A. D. Young	Note on the Effect of Compressibility on Jones' Momentum Method of Measuring Profile Drag. R. & M. 1881. 1939.
3	A. D. Young	Note on Momentum Methods of Measuring Profile Drags at High Speeds. R. & M. 1963. 1945.
4	A. D. Young and J. N. Maas	The Behaviour of a Pitot-Tube in a Transverse Total Pressure Gradient. R. & M. 1770. 1937.
5	H. Glauert	Wind Tunnel Interference on Wings, Bodies and Airscrews. R. & M. 1566. 1933.
6	W. F. Hilton	Thermal Effects on Bodies in an Air Stream. *Proc. Roy. Soc.* A.168. (1938), p. 54, Fig. 10.
7	G. I. Taylor	The Determination of Drag by the Pitot Traverse Method. R. & M. 1808. 1937.
8	C. N. H. Lock, W. F. Hilton and Miss G. A. M. Hyde.	Measurement of Airscrew Blade Root Losses in the High-Speed Wind Tunnel. A.R.C. 4736. Oct., 1940. (To be published.)
9	J. A. Beavan and A. R. Manwell ..	Tables for Use in the Determination of Profile Drag at High Speeds by the Pitot Traverse Method. A.R.C. 5326. 1941. (To be published.)
10	J. A. Beavan	Note on Methods at the N.P.L. and in the U.S.A. for Calculating the Profile Drag at High Speed from Pitot Traverse Measurements. A.R.C. 6658. 1943. (To be published.)
11	J. S. Thompson	A Simple Method of Computing C_D from Wake Traverses at High Speeds. R.A.E. Report Aero 2005. A.R.C. 8462. 1944. (Unpublished.)
12	H. H. Pearcey	The Effect of the Condensation of Atmospheric Water Vapour on Total Head and other Measurements in the N.P.L. High-Speed Tunnels. A.R.C. 7482. 1944. (Unpublished.)

TABLE 1

x	$\lambda(x)$	x	$\lambda(x)$	x	$\lambda(x)$	x	$\lambda(x)$	x	$\lambda(x)$
	100		98		96		95		92
0·001	0·00100	0·030	0·02968	0·059	0·05780	0·088	0·08537	0·117	0·11241
	100		98		96		94		93
0·002	0·00200	0·031	0·03066	0·060	0·05876	0·089	0·08631	0·118	0·11334
	100		98		96		94		92
0·003	0·00300	0·032	0·03164	0·061	0·05972	0·090	0·08725	0·119	0·11426
	99		98		95		94		92
0·004	0·00399	0·033	0·03262	0·062	0·06067	0·091	0·08819	0·120	0·11518
	100		98		96		94		92
0·005	0·00499	0·034	0·03360	0·063	0·06163	0·092	0·08913	0·121	0·11610
	100		97		95		94		93
0·006	0·00599	0·035	0·03457	0·064	0·06258	0·093	0·09007	0·122	0·11703
	99		98		96		93		92
0·007	0·00698	0·036	0·03555	0·065	0·06354	0·094	0·09100	0·123	0·11795
	100		97		96		94		92
0·008	0·00798	0·037	0·03652	0·066	0·06450	0·095	0·09194	0·124	0·11887
	99		98		96		94		92
0·009	0·00897	0·038	0·03750	0·067	0·06546	0·096	0·09288	0·125	0·11979
	99		97		95		93		92
0·010	0·00996	0·039	0·03847	0·068	0·06641	0·097	0·09381	0·126	0·12071
	100		97		95		94		91
0·011	0·01096	0·040	0·03944	0·069	0·06736	0·098	0·09475	0·127	0·12162
	99		97		96		94		92
0·012	0·01195	0·041	0·04041	0·070	0·06832	0·099	0·09569	0·128	0·12254
	99		97		95		93		92
0·013	0·01294	0·042	0·04138	0·071	0·06927	0·100	0·09662	0·129	0·12346
	99		98		95		93		92
0·014	0·01393	0·043	0·04236	0·072	0·07022	0·101	0·09755	0·130	0·12438
	99		97		95		94		91
0·015	0·01492	0·044	0·04333	0·073	0·07117	0·102	0·09849	0·131	0·12529
	99		96		95		93		92
0·016	0·01591	0·045	0·04429	0·074	0·07212	0·103	0·09942	0·132	0·12621
	99		97		95		93		91
0·017	0·01690	0·046	0·04526	0·075	0·07307	0·104	0·10035	0·133	0·12712
	99		97		95		93		92
0·018	0·01789	0·047	0·04623	0·076	0·07402	0·105	0·10128	0·134	0·12804
	98		97		95		93		91
0·019	0·01887	0·048	0·04720	0·077	0·07497	0·106	0·10221	0·135	0·12895
	99		97		95		93		91
0·020	0·01986	0·049	0·04817	0·078	0·07592	0·107	0·10314	0·136	0·12986
	98		96		95		93		92
0·021	0·02084	0·050	0·04913	0·079	0·07687	0·108	0·10407	0·137	0·13078
	99		97		94		93		91
0·022	0·02183	0·051	0·05010	0·080	0·07781	0·109	0·10500	0·138	0·13169
	98		96		95		93		91
0·023	0·02281	0·052	0·05106	0·081	0·07876	0·110	0·10593	0·139	0·13260
	99		97		95		93		91
0·024	0·02380	0·053	0·05203	0·082	0·07971	0·111	0·10686	0·140	0·13351
	98		96		94		93		91
0·025	0·02478	0·054	0·05299	0·083	0·08065	0·112	0·10779	0·141	0·13442
	98		96		94		92		91
0·026	0·02576	0·055	0·05395	0·084	0·08159	0·113	0·10871	0·142	0·13533
	98		96		95		93		91
0·027	0·02674	0·056	0·05491	0·085	0·08254	0·114	0·10964	0·143	0·13624
	98		97		94		92		91
0·028	0·02772	0·057	0·05588	0·086	0·08348	0·115	0·11056	0·144	0·13715
	98		96		94		93		91
0·029	0·02870	0·058	0·05684	0·087	0·08442	0·116	0·11149	0·145	0·13806

TABLE 1—*contd.*

x	$\lambda(x)$		x	$\lambda(x)$		x	$\lambda(x)$		x	$\lambda(x)$		x	$\lambda(x)$	
		91			89			88			87			85
0·146	0·13897		0·175	0·16504		0·204	0·19066		0·233	0·21585		0·262	0·24061	
		90			89			88			86			84
0·147	0·13987		0·176	0·16593		0·205	0·19154		0·234	0·21671		0·263	0·24145	
		91			89			87			86			85
0·148	0·14078		0·177	0·16682		0·206	0·19241		0·235	0·21757		0·264	0·24230	
		90			89			88			85			85
0·149	0·14168		0·178	0·16771		0·207	0·19329		0·236	0·21842		0·265	0·24315	
		91			89			87			86			84
0·150	0·14259		0·179	0·16860		0·208	0·19416		0·237	0·21928		0·266	0·24399	
		90			89			87			86			85
0·151	0·14349		0·180	0·16949		0·209	0·19503		0·238	0·22014		0·267	0·24484	
		91			89			88			86			84
0·152	0·14440		0·181	0·17038		0·210	0·19591		0·239	0·22100		0·268	0·24568	
		90			89			87			86			84
0·153	0·14530		0·182	0·17127		0·211	0·19678		0·240	0·22186		0·269	0·24652	
		91			88			87			86			85
0·154	0·14621		0·183	0·17215		0·212	0·19765		0·241	0·22272		0·270	0·24737	
		90			89			87			85			84
0·155	0·14711		0·184	0·17304		0·213	0·19852		0·242	0·22357		0·271	0·24821	
		90			89			87			86			84
0·156	0·14801		0·185	0·17393		0·214	0·19939		0·243	0·22443		0·272	0·24905	
		90			88			87			85			84
0·157	0·14891		0·186	0·17481		0·215	0·20026		0·244	0·22528		0·273	0·24989	
		90			89			87			86			84
0·158	0·14981		0·187	0·17570		0·216	0·20113		0·245	0·22614		0·274	0·25073	
		90			88			87			86			84
0·159	0·15071		0·188	0·17658		0·217	0·20200		0·246	0·22700		0·275	0·25157	
		90			89			87			85			85
0·160	0·15161		0·189	0·17747		0·218	0·20287		0·247	0·22785		0·276	0·25242	
		90			88			87			85			84
0·161	0·15251		0·190	0·17835		0·219	0·20374		0·248	0·22870		0·277	0·25326	
		90			88			87			86			84
0·162	0·15341		0·191	0·17923		0·220	0·20461		0·249	0·22956		0·278	0·25410	
		90			88			87			85			83
0·163	0·15431		9·192	0·18011		0·221	0·20548		0·250	0·23041		0·279	0·25493	
		90			89			86			85			84
0·164	0·15521		0·192	0·18100		0·222	0·20634		0·251	0·23126		0·280	0·25577	
		89			88			87			86			84
0·165	0·15610		0·194	0·18188		0·223	0·20721		0·252	0·23212		0·281	0·25661	
		90			88			86			85			84
0·166	0·15700		0·195	0·18276		0·224	0·20807		0·253	0·23297		0·282	0·25745	
		89			88			87			85			84
0·167	0·15789		0·196	0·18364		0·225	0·20894		0·254	0·23382		0·283	0·25829	
		90			88			86			85			83
0·168	0·15879		0·197	0·18452		0·226	0·20980		0·255	0·23467		0·284	0·25912	
		89			88			87			85			84
0·169	0·15968		0·198	0·18540		0·227	0·21067		0·256	0·23552		0·285	0·25996	
		90			88			86			85			84
0·170	0·16058		0·199	0·18628		0·228	0·21153		0·257	0·23637		0·286	0·26080	
		89			87			87			85			83
0·171	0·16147		0·200	0·18715		0·229	0·21240		0·258	0·23722		0·287	0·26163	
		90			88			86			84			84
0·172	0·16237		0·201	0·18803		0·230	0·21326		0·259	0·23806		0·288	0·26247	
		89			88			86			85			83
0·173	0·16326		0·202	0·18891		0·231	0·21412		0·260	0·23891		0·289	0·26330	
		89			87			86			85			83
0·174	0·16415		0·203	0·18978		0·232	0·21498		0·261	0·23976		0·290	0·26413	

TABLE 1—*contd.*

x	$\lambda(x)$		x	$\lambda(x)$		x	$\lambda(x)$		x	$\lambda(x)$		x	$\lambda(x)$	
		84			82			81			80			78
0·291	0·26497		0·320	0·28894		0·349	0·31254		0·378	0·33578		0·407	0·35867	
		83			82			81			79			79
0·292	0·26580		0·321	0·28976		0·350	0·31335		0·379	0·33657		0·408	0·35946	
		83			82			80			80			78
0·293	0·26663		0·322	0·29058		0·351	0·31415		0·380	0·33737		0·409	0·36024	
		84			82			81			79			78
0·294	0·26747		0·323	0·29140		0·352	0·31496		0·381	0·33816		0·410	0·36102	
		83			82			81			80			78
0·295	0·26830		0·324	0·29222		0·353	0·31577		0·382	0·33896		0·411	0·36180	
		83			81			80			79			79
0·296	0·26913		0·325	0·29303		0·354	0·31657		0·383	0·33975		0·412	0·36259	
		83			82			81			79			78
0·297	0·26996		0·326	0·29385		0·355	0·31738		0·384	0·34054		0·413	0·36337	
		83			82			80			80			78
0·298	0·27079		0·327	0·29467		0·356	0·31818		0·385	0·34134		0·414	0·36415	
		83			82			80			79			78
0·299	0·27162		0·328	0·29549		0·357	0·31898		0·386	0·34213		0·415	0·36493	
		83			81			81			79			78
0·300	0·27245		0·329	0·29630		0·358	0·31979		0·387	0·34292		0·416	0·36571	
		83			82			80			79			78
0·301	0·27328		0·330	0·29712		0·359	0·32059		0·388	0·34371		0·417	0·36649	
		83			81			80			79			78
0·302	0·27411		0·331	0·29793		0·360	0·32139		0·389	0·34450		0·418	0·36727	
		82			82			81			79			77
0·303	0·27493		0·332	0·29875		0·361	0·32220		0·390	0·34529		0·419	0·36804	
		83			82			80			79			78
0·304	0·27576		0·333	0·29957		0·362	0·32300		0·391	0·34608		0·420	0·36882	
		83			81			80			79			78
0·305	0·27659		0·334	0·30038		0·363	0·32380		0·392	0·34687		0·421	0·36960	
		82			81			80			79			78
0·306	0·27741		0·335	0·30119		0·364	0·32460		0·393	0·34766		0·422	0·37038	
		83			82			80			79			78
0·307	0·27824		0·336	0·30201		0·365	0·32540		0·394	0·34845		0·423	0·37116	
		83			81			80			79			77
0·308	0·27907		0·337	0·30282		0·366	0·32620		0·395	0·34924		0·424	0·37193	
		82			81			80			79			78
0·309	0·27989		0·338	0·30363		0·367	0·32700		0·396	0·35003		0·425	0·37271	
		83			81			80			79			78
0·310	0·28072		0·339	0·30444		0·368	0·32780		0·397	0·35082		0·426	0·37349	
		82			82			80			78			77
0·311	0·28154		0·340	0·30526		0·369	0·32860		0·398	0·35160		0·427	0·37426	
		83			81			80			79			78
0·312	0·28237		0·341	0·30607		0·370	0·32940		0·399	0·35239		0·428	0·37504	
		82			81			80			79			77
0·313	0·28319		0·342	0·30688		0·371	0·33020		0·400	0·35318		0·429	0·37581	
		82			81			80			78			78
0·314	0·28401		0·343	0·30769		0·372	0·33100		0·401	0·35396		0·430	0·37659	
		82			81			80			79			77
0·315	0·28483		0·344	0·30850		0·373	0·33180		0·402	0·35475		0·431	0·37736	
		83			81			79			79			78
0·316	0·28566		0·345	0·30931		0·374	0·33259		0·403	0·35554		0·432	0·37814	
		82			81			80			78			77
0·317	0·28648		0·346	0·31012		0·375	0·33339		0·404	0·35632		0·433	0·37891	
		82			81			80			79			77
0·318	0·28730		0·347	0·31093		0·376	0·33419		0·405	0·35711		0·434	0·37968	
		82			80			79			78			78
0·319	0·28812		0·348	0·31173		0·377	0·33498		0·406	0·35789		0·435	0·38046	

TABLE 1—*contd.*

x	$\lambda(x)$		x	$\lambda(x)$		x	$\lambda(x)$		x	$\lambda(x)$		x	$\lambda(x)$
		77			76			75			74			73
0·436	0·38123	77	0·465	0·40346	77	0·494	0·42539	75	0·523	0·44701	74	0·552	0·46834	73
0·437	0·38200	77	0·466	0·40423	76	0·495	0·42614	75	0·524	0·44775	74	0·553	0·46907	73
0·438	0·38277	77	0·467	0·40499	76	0·496	0·42689	75	0·525	0·44849	74	0·554	0·46980	73
0·439	0·38354	77	0·468	0·40575	76	0·497	0·42764	75	0·526	0·44923	74	0·555	0·47053	73
0·440	0·38431	77	0·469	0·40651	76	0·498	0·42839	75	0·527	0·44997	74	0·556	0·47126	73
0·441	0·38508	77	0·470	0·40727	76	0·499	0·42914	74	0·528	0·45071	73	0·557	0·47199	72
0·442	0·38585	77	0·471	0·40803	76	0·500	0·42988	75	0·529	0·45144	74	0·558	0·47271	73
0·443	0·38662	77	0·472	0·40879	75	0·501	0·43063	75	0·530	0·45218	74	0·559	0·47344	73
0·444	0·38739	77	0·473	0·40954	76	0·502	0·43138	75	0·531	0·45292	74	0·560	0·47417	73
0·445	0·38816	77	0·474	0·41030	76	0·503	0·43213	75	0·532	0·45366	74	0·561	0·47490	73
0·446	0·38893	77	0·475	0·41106	76	0·504	0·43288	74	0·533	0·45440	73	0·562	0·47563	72
0·447	0·38970	77	0·476	0·41182	75	0·505	0·43362	75	0·534	0·45513	74	0·563	0·47635	73
0·448	0·39047	77	0·477	0·41257	76	0·506	0·43437	75	0·535	0·45587	74	0·564	0·47708	72
0·449	0·39124	76	0·478	0·41333	76	0·507	0·43512	74	0·536	0·45661	73	0·565	0·47780	73
0·450	0·39200	77	0·479	0·41409	75	0·508	0·43586	75	0·537	0·45734	74	0·566	0·47853	73
0·451	0·39277	77	0·480	0·41484	75	0·509	0·43661	74	0·538	0·45808	73	0·567	0·47926	72
0·452	0·39354	76	0·481	0·41559	76	0·510	0·43735	75	0·539	0·45881	74	0·568	0·47998	73
0·453	0·39430	77	0·482	0·41635	76	0·511	0·43810	74	0·540	0·45955	73	0·569	0·48071	72
0·454	0·39507	76	0·483	0·41711	75	0·512	0·43884	74	0·541	0·46028	74	0·570	0·48143	73
0·455	0·39583	77	0·484	0·41786	76	0·513	0·43958	75	0·542	0·46102	73	0·571	0·48216	72
0·456	0·39660	76	0·485	0·41862	75	0·514	0·44033	74	0·543	0·46175	73	0·572	0·48288	73
0·457	0·39736	77	0·486	0·41937	75	0·515	0·44107	75	0·544	0·46248	74	0·573	0·48361	72
0·458	0·39813	76	0·487	0·42012	76	0·516	0·44182	74	0·545	0·46322	73	0·574	0·48433	72
0·459	0·39889	76	0·488	0·42088	75	0·517	0·44256	74	0·546	0·46395	73	0·575	0·48505	73
0·460	0·39965	77	0·489	0·42163	75	0·518	0·44330	74	0·547	0·46468	73	0·576	0·48578	72
0·461	0·40042	76	0·490	0·42238	75	0·519	0·44404	74	0·548	0·46541	73	0·577	0·48650	72
0·462	0·40118	76	0·491	0·42313	76	0·520	0·44478	75	0·549	0·46614	74	0·578	0·48722	72
0·463	0·40194	76	0·492	0·42389	75	0·521	0·44553	74	0·550	0·46688	73	0·579	0·48794	72
0·464	0·40270		0·493	0·42464		0·522	0·44627		0·551	0·46761		0·580	0·48866	

TABLE 1—*contd.*

x	$\lambda(x)$		x	$\lambda(x)$		x	$\lambda(x)$		x	$\lambda(x)$		x	$\lambda(x)$	
		72			72			70			69			69
0·581	0·48938		0·610	0·51016		0·639	0·53066		0·668	0·55091		0·697	0·57091	
		73			71			70			69			68
0·582	0·49011		0·611	0·51087		0·640	0·53136		0·669	0·55160		0·698	0·57159	
		72			71			71			70			69
0·583	0·49083		0·612	0·51158		0·641	0·53207		0·670	0·55230		0·699	0·57228	
		72			71			70			69			68
0·584	0·49155		0·613	0·51229		0·642	0·53277		0·671	0·55299		0·700	0·57296	
		72			71			70			69			69
0·585	0·49227		0·614	0·51300		0·643	0·53347		0·672	0·55368		0·701	0·57365	
		72			71			70			70			68
0·586	0·49299		0·615	0·51371		0·644	0·53417		0·673	0·55438		0·702	0·57433	
		71			71			70			69			69
0·587	0·49370		0·616	0·51442		0·645	0·53487		0·674	0·55507		0·703	0·57502	
		72			71			70			69			68
0·588	0·49442		0·617	0·51513		0·646	0·53557		0·675	0·55576		0·704	0·57570	
		72			71			70			69			68
0·589	0·49514		0·618	0·51584		0·647	0·53627		0·676	0·55645		0·705	0·57638	
		72			71			70			69			69
0·590	0·49586		0·619	0·51655		0·648	0·53697		0·677	0·55714		0·706	0·57707	
		72			71			70			69			68
0·591	0·49658		0·620	0·51726		0·649	0·53767		0·678	0·55783		0·707	0·57775	
		71			70			70			69			68
0·592	0·49729		0·621	0·51796		0·650	0·53837		0·679	0·55852		0·708	0·57843	
		72			71			70			70			68
0·592	0·49801		0·622	0·51867		0·651	0·53907		0·680	0·55922		0·709	0·57911	
		72			71			70			69			69
0·594	0·49873		0·623	0·51938		0·652	0·53977		0·681	0·55991		0·710	0·57980	
		71			71			70			69			68
0·595	0·49944		0·624	0·52009		0·653	0·54047		0·682	0·56060		0·711	0·58048	
		72			70			70			69			68
0·596	0·50016		0·625	0·52079		0·654	0·54117		0·683	0·56129		0·712	0·58116	
		72			71			70			68			68
0·597	0·50088		0·626	0·52150		0·655	0·54186		0·684	0·56197		0·713	0·58184	
		71			71			70			69			68
0·598	0·50159		0·627	0·52221		0·656	0·54256		0·685	0·56266		0·714	0·58252	
		72			70			70			69			68
0·599	0·50231		0·628	0·52291		0·657	0·54326		0·686	0·56335		0·715	0·58320	
		71			71			69			69			68
0·600	0·50302		0·629	0·52362		0·658	0·54395		0·687	0·56404		0·716	0·58388	
		72			71			70			69			68
0·601	0·50374		0·630	0·52433		0·659	0·54465		0·688	0·56473		0·717	0·58456	
		71			70			70			69			68
0·602	0·50445		0·631	0·52503		0·660	0·54535		0·689	0·56542		0·718	0·58524	
		72			71			70			68			68
0·603	0·50517		0·632	0·52574		0·661	0·54605		0·690	0·56610		0·719	0·58592	
		71			70			69			69			68
0·604	0·50588		0·633	0·52644		0·662	0·54674		0·691	0·56679		0·720	0·58660	
		71			70			70			69			339
0·605	0·50659		0·634	0·52714		0·663	0·54744		0·692	0·56748		0·725	0·58999	
		72			71			69			68			338
0·606	0·50731		0·635	0·52785		0·664	0·54813		0·693	0·56816		0·730	0·59337	
		71			70			70			69			338
0·607	0·50802		0·636	0·52855		0·665	0·54883		0·694	0·56885		0·735	0·59675	
		71			71			69			69			337
0·608	0·50873		0·637	0·52926		0·666	0·54952		0·695	0·56954		0·740	0·60012	
		71			70			70			68			336
0·609	0·50944		0·638	0·52996		0·667	0·55022		0·696	0·57022		0·745	0·60348	

TABLE 1—*contd.*

x	$\lambda(x)$	x	$\lambda(x)$	x	$\lambda(x)$	x	$\lambda(x)$	x	$\lambda(x)$
	336		331		326		322		318
0·750	0·60684	0·785	0·63014	0·820	0·65311	0·855	0·67578	0·890	0·69814
	335		330		326		321		317
0·755	0·61019	0·790	0·63344	0·825	0·65637	0·860	0·67899	0·895	0·70131
	334		329		325		321		317
0·760	0·61353	0·795	0·63673	0·830	0·65962	0·865	0·68220	0·900	0·70448
	333		329		325		320		
0·765	0·61686	0·800	0·64002	0·835	0·66287	0·870	0·68540		
	333		329		323		319		
0·770	0·62019	0·805	0·64331	0·840	0·66610	0·875	0·68859		
	333		327		324		319		
0·775	0·62352	0·810	0·64658	0·845	0·66934	0·880	0·69178		
	331		327		322		318		
0·780	0·62683	0·815	0·64985	0·850	0·67256	0·885	0·69496		

TABLE 1a

Table of Proportional Parts for use with Tables 1 *and* 3.

	×0·1	×0·2	×0·3	×0·4	×0·5	×0·6	×0·7	×0·8	×0·9
68	7	14	20	27	34	41	48	54	61
69	7	14	21	28	34_5	41	48	55	62
70	7	14	21	28	35	42	49	56	63
71	7	14	21	28	35_5	43	50	57	64
72	7	14	22	29	36	43	50	58	65
73	7	15	22	29	36_5	44	51	58	66
74	7	15	22	30	37	44	52	59	67
75	7_5	15	22_5	30	37_5	45	52_5	60	67_5
76	8	15	23	30	38	46	53	61	68
77	8	15	23	31	38_5	46	54	62	69
78	8	16	23	31	39	47	55	62	70
79	8	16	24	32	39_5	47	55	63	71
80	8	16	24	32	40	48	56	64	72
81	8	16	24	32	40_5	49	57	65	73
82	8	16	25	33	41	49	57	66	74
83	8	17	25	33	41_5	50	58	66	75
84	8	17	25	34	42	50	59	67	76
85	8_5	17	25_5	34	42_5	51	59_5	68	76_5
86	9	17	26	34	43	52	60	69	77
87	9	17	26	35	43_5	52	61	70	78
88	9	18	26	35	44	53	62	70	79
89	9	18	27	36	44_5	53	62	71	80
90	9	18	27	36	45	54	63	72	81
91	9	18	27	36	45_5	55	64	73	82
92	9	18	28	37	46	55	64	74	83
93	9	19	28	37	46_5	56	65	74	84
94	9	19	28	38	47	56	66	75	85
95	9_5	19	28_5	38	47_5	57	66_5	76	85_5
96	10	19	29	38	48	58	67	77	86
97	10	19	29	39	48_5	58	68	78	87
98	10	20	29	39	49	59	69	78	88
99	10	20	30	40	49_5	59	69	79	89
100	10	20	30	40	50	60	70	80	90

TABLE 2

H_1/H_0	$(H_1/H_0)^{1/7}$	H_1/H_0	$(H_1/H_0)^{1/7}$	H_1/H_0	$(H_1/H_0)^{1/7}$	H_1/H_0	$(H_1/H_0)^{1/7}$	H_1/H_0	$(H_1/H_0)^{1/7}$
0·800	0·96863 17	0·829	0·97357 17	0·858	0·97836 17	0·887	0·98302 16	0·916	0·98754 15
0·801	0·96880 17	0·830	0·97373 16	0·859	0·97852 16	0·888	0·98317 15	0·917	0·98770 16
0·802	0·96897 17	0·831	0·97390 17	0·860	0·97868 16	0·889	0·98333 16	0·918	0·98785 15
0·803	0·96914 17	0·832	0·97407 17	0·861	0·97885 17	0·890	0·98349 16	0·919	0·98801 16
0·804	0·96932 18	0·833	0·97423 16	0·862	0·97901 16	0·891	0·98365 16	0·920	0·98816 15
0·805	0·96949 17	0·834	0·97440 17	0·863	0·97917 16	0·892	0·98381 16	0·921	0·98831 15
0·806	0·96966 17	0·835	0·97457 17	0·864	0·97933 16	0·893	0·98396 15	0·922	0·98847 16
0·807	0·96983 17	0·836	0·97474 17	0·865	0·97950 17	0·894	0·98412 16	0·923	0·98862 15
0·808	0·97000 17	0·837	0·97490 16	0·866	0·97966 16	0·895	0·98428 16	0·924	0·98877 15
0·809	0·97017 17	0·838	0·97507 17	0·867	0·97982 16	0·896	0·98443 15	0·925	0·98892 15
0·810	0·97035 18	0·839	0·97523 16	0·868	0·97998 16	0·897	0·98459 16	0·926	0·98908 16
0·811	0·97052 17	0·840	0·97540 17	0·869	0·98014 16	0·898	0·98475 16	0·927	0·98923 15
0·812	0·97069 17	0·841	0·97557 17	0·870	0·98030 16	0·899	0·98490 15	0·928	0·98938 15
0·813	0·97086 17	0·842	0·97573 16	0·871	0·98046 16	0·900	0·98506 16	0·929	0·98953 15
0·814	0·97103 17	0·843	0·97590 17	0·872	0·98062 16	0·901	0·98522 16	0·930	0·98969 16
0·815	0·97120 17	0·844	0·97606 16	0·873	0·98078 16	0·902	0·98537 15	0·931	0·98984 15
0·816	0·97137 17	0·845	0·97623 17	0·874	0·98094 16	0·903	0·98553 16	0·932	0·98999 15
0·817	0·97154 17	0·846	0·97639 16	0·875	0·98110 16	0·904	0·98569 16	0·933	0·99014 15
0·818	0·97171 17	0·847	0·97656 17	0·876	0·98127 17	0·905	0·98584 15	0·934	0·99029 15
0·819	0·97188 17	0·848	0·97672 16	0·877	0·98143 16	0·906	0·98600 16	0·935	0·99045 16
0·820	0·97205 17	0·849	0·97689 17	0·878	0·98158 15	0·907	0·98615 15	0·936	0·99060 15
0·821	0·97222 17	0·850	0·97705 16	0·879	0·98174 16	0·908	0·98631 16	0·937	0·99075 15
0·822	0·97239 17	0·851	0·97721 16	0·880	0·98190 16	0·909	0·98646 15	0·938	0·99090 15
0·823	0·97256 17	0·852	0·97738 17	0·881	0·98206 16	0·910	0·98662 16	0·939	0·99105 15
0·824	0·97272 16	0·853	0·97754 16	0·882	0·98222 16	0·911	0·98677 15	0·940	0·99120 15
0·825	0·97289 17	0·854	0·97771 17	0·883	0·98238 16	0·912	0·98693 16	0·941	0·99135 15
0·826	0·97306 17	0·855	0·97787 16	0·884	0·98254 16	0·913	0·98708 15	0·942	0·99150 15
0·827	0·97323 17	0·856	0·97803 16	0·885	0·98270 16	0·914	0·98724 16	0·943	0·99165 15
0·828	0·97340 17	0·857	0·97819 16	0·886	0·98286 16	0·915	0·98739 15	0·944	0·99180 15

TABLE 2—*contd.*

H_1/H_0	$(H_1/H_0)^{1/7}$	H_1/H_0	$(H_1/H_0)^{1/7}$	H_1/H_0	$(H_1/H_0)^{1/7}$	H_1/H_0	$(H_1/H_0)^{1/7}$	H_1/H_0	$(H_1/H_0)^{1/7}$
	15		15		15		14		15
0·945	0·99195	0·957	0·99374	0·969	0·99551	0·981	0·99726	0·993	0·99900
	15		15		15		15		14
0·946	0·99210	0·958	0·99389	0·970	0·99566	0·982	0·99741	0·994	0·99914
	15		15		14		14		14
0·947	0·99225	0·959	0·99404	0·971	0·99580	0·983	0·99755	0·995	0·99928
	15		15		15		15		15
0·948	0·99240	0·960	0·99419	0·972	0·99595	0·984	0·99770	0·996	0·99943
	15		14		15		14		14
0·949	0·99255	0·961	0·99433	0·973	0·99610	0·985	0·99784	0·997	0·99957
	15		15		14		15		14
0·950	0·99270	0·962	0·99448	0·974	0·99624	0·986	0·99799	0·998	0·99971
	15		15		15		14		15
0·951	0·99285	0·963	0·99463	0·975	0·99639	0·987	0·99813	0·999	0·99986
	15		15		15		15		14
0·952	0·99300	0·964	0·99478	0·976	0·99654	0·988	0·99828	1·000	1·00000
	15		14		14		14		
0·953	0·99315	0·965	0·99492	0·977	0·99668	0·989	0·99842		
	14		15		15		15		
0·954	0·99329	0·966	0·99507	0·978	0·99683	0·990	0·99857		
	15		15		14		14		
0·955	0·99344	0·967	0·99522	0·979	0·99697	0·991	0·99871		
	15		14		15		14		
0·956	0·99359	0·968	0·99536	0·980	0·99712	0·992	0·99885		

TABLE 2a

Table of Proportional Parts for Use with Table 2

	×0·1	×0·2	×0·3	×0·4	×0·5	×0·6	×0·7	×0·8	×0·9
14	1	3	4	6	7	8	10	11	13
15	1_5	3	4_5	6	7_5	9	10_5	12	13_5
16	2	3	5	6	8	10	11	13	14
17	2	3	5	7	8_5	10	12	14	15

TABLE 3

P_1/P_0	$(P_1/P_0)^{6/7}$	P_1/P_0	$(P_1/P_0)^{6/7}$	P_1/P_0	$(P_1/P_0)^{6/7}$	P_1/P_0	$(P_1/P_0)^{6/7}$	P_1/P_0	$(P_1/P_0)^{6/7}$
			88		88		88		86
0·800	0·82591	0·829	0·85151	0·858	0·87698	0·887	0·90233	0·916	0·92755
	89		88		88		87		87
0·801	0·82680	0·830	0·85239	0·859	0·87786	0·888	0·90320	0·917	0·92842
	88		88		87		87		87
0·802	0·82768	0·831	0·85327	0·860	0·87873	0·889	0·90407	0·918	0·92929
	89		88		88		87		87
0·803	0·82857	0·832	0·85415	0·861	0·87961	0·890	0·90494	0·919	0·93016
	88		88		87		87		86
0·804	0·82945	0·833	0·85503	0·862	0·88048	0·891	0·90581	0·920	0·93102
	89		88		88		87		87
0·805	0·83034	0·834	0·85591	0·863	0·88136	0·892	0·90668	0·921	0·93189
	88		88		87		87		87
0·806	0·83122	0·835	0·85679	0·864	0·88223	0·893	0·90755	0·922	0·93276
	88		88		88		88		87
0·807	0·83210	0·836	0·85767	0·865	0·88311	0·894	0·90843	0·923	0·93363
	89		88		87		87		86
0·808	0·83299	0·837	0·85855	0·866	0·88398	0·895	0·90930	0·924	0·93449
	88		88		88		87		87
0·809	0·83387	0·838	0·85943	0·867	0·88486	0·896	0·91017	0·925	0·93536
	88		88		87		87		86
0·810	0·83475	0·839	0·86031	0·868	0·88573	0·897	0·91104	0·926	0·93622
	89		88		88		87		87
0·811	0·83564	0·840	0·86119	0·869	0·88661	0·898	0·91191	0·927	0·93709
	88		87		87		87		87
0·812	0·83652	0·841	0·86206	0·870	0·88748	0·899	0·91278	0·928	0·93796
	88		88		88		87		86
0·813	0·83740	0·842	0·86294	0·871	0·88836	0·900	0·91365	0·929	0·93882
	89		88		87		87		87
0·814	0·83829	0·843	0·86382	0·872	0·88923	0·901	0·91452	0·930	0·93969
	88		88		87		87		87
0·815	0·83917	0·844	0·86470	0·873	0·89010	0·902	0·91539	0·931	0·94056
	88		88		88		87		86
0·816	0·84005	0·845	0·86558	0·874	0·89098	0·903	0·91626	0·932	0·94142
	88		88		87		87		87
0·817	0·84093	0·846	0·86646	0·875	0·89185	0·904	0·91713	0·933	0·94229
	89		87		88		87		86
0·818	0·84182	0·847	0·86733	0·876	0·89273	0·905	0·91800	0·934	0·94315
	88		88		87		87		87
0·819	0·84270	0·848	0·86821	0·877	0·89360	0·906	0·91887	0·935	0·94402
	88		88		87		87		86
0·820	0·84358	0·849	0·86909	0·878	0·89447	0·907	0·91974	0·936	0·94488
	88		88		88		87		87
0·821	0·84446	0·850	0·86997	0·879	0·89535	0·908	0·92061	0·937	0·94575
	88		87		87		87		87
0·822	0·84534	0·851	0·87084	0·880	0·89622	0·909	0·92148	0·938	0·94662
	88		88		87		86		86
0·823	0·84622	0·852	0·87172	0·881	0·89709	0·910	0·92234	0·939	0·94748
	89		88		87		87		87
0·824	0·84711	0·853	0·87260	0·882	0·89796	0·911	0·92321	0·940	0·94835
	88		87		88		87		86
0·825	0·84799	0·854	0·87347	0·883	0·89884	0·912	0·92408	0·941	0·94921
	88		88		87		87		86
0·826	0·84887	0·855	0·87435	0·884	0·89971	0·913	0·92495	0·942	0·95007
	88		88		87		87		87
0·827	0·84975	0·856	0·87523	0·885	0·90058	0·914	0·92582	0·943	0·95094
	88		87		87		87		86
0·828	0·85063	0·857	0·87610	0·886	0·90145	0·915	0·92669	0·944	0·95180

TABLE 3—*contd.*

P_1/P_0	$(P_1/P_0)^{6/7}$	P_1/P_0	$(P_1/P_0)^{6/7}$	P_1/P_0	$(P_1/P_0)^{6/7}$	P_1/P_0	$(P_1/P_0)^{6/7}$	P_1/P_0	$(P_1/P_0)^{6/7}$
	87		86		86		86		85
0·945	0·95267	0·974	0·97767	1·003	1·00257	1·032	1·02737	1·061	1·05206
	86		86		86		85		85
0·946	0·95353	0·975	0·97853	1·004	1·00343	1·033	1·02822	1·062	1·05291
	86		86		85		85		85
0·947	0·95439	0·976	0·97939	1·005	1·00428	1·034	1·02907	1·063	1·05376
	87		86		86		85		85
0·948	0·95526	0·977	0·98025	1·006	1·00514	1·035	1·02992	1·064	1·05461
	86		86		86		86		85
0·949	0·95612	0·978	0·98111	1·007	1·00600	1·036	1·03078	1·065	1·05546
	87		86		85		85		85
0·950	0·95699	0·979	0·98197	1·008	1·00685	1·037	1·03163	1·066	1·05631
	86		86		86		85		85
0·951	0·95785	0·980	0·98283	1·009	1·00771	1·038	1·03248	1·067	1·05716
	86		86		86		86		85
0·952	0·95871	0·981	0·98369	1·010	1·00857	1·039	1·03334	1·068	1·05801
	87		86		85		85		85
0·953	0·95958	0·982	0·98455	1·011	1·00942	1·040	1·03419	1·069	1·05886
	86		86		86		85		85
0·954	0·96044	0·983	0·98541	1·012	1·01028	1·041	1·03504	1·070	1·05971
	86		86		85		85		85
0·955	0·96130	0·984	0·98627	1·013	1·01113	1·042	1·03589	1·071	1·06056
	87		86		86		86		85
0·956	0·96217	0·985	0·98713	1·014	1·01199	1·043	1·03675	1·072	1·06141
	86		86		85		85		84
0·957	0·96303	0·986	0·98799	1·015	1·01284	1·044	1·03760	1·073	1·06225
	86		86		86		85		85
0·958	0·96389	0·987	0·98885	1·016	1·01370	1·045	1·03845	1·074	1·06310
	86		86		85		85		85
0·959	0·96475	0·988	0·98971	1·017	1·01455	1·046	1·03930	1·075	1·06395
	87		86		86		85		85
0·960	0·96562	0·989	0·99057	1·018	1·01541	1·047	1·04015	1·076	1·06480
	86		85		85		85		85
0·961	0·96648	0·990	0·99142	1·019	1·01626	1·048	1·04100	1·077	1·06565
	86		86		86		86		85
0·962	0·96734	0·991	0·99228	1·020	1·01712	1·049	1·04186	1·078	1·06650
	86		86		85		85		84
0·963	0·96820	0·992	0·99314	1·021	1·01797	1·050	1·04271	1·079	1·06734
	86		86		86		85		85
0·964	0·96906	0·993	0·99400	1·022	1·01883	1·051	1·04356	1·080	1·06819
	86		86		85		85		85
0·965	0·96992	0·994	0·99486	1·023	1·01968	1·052	1·04441	1·081	1·06904
	87		85		86		85		85
0·966	0·97079	0·995	0·99571	1·024	1·02054	1·053	1·04526	1·082	1·06989
	86		86		85		85		84
0·967	0·97165	0·996	0·99657	1·025	1·02139	1·054	1·04611	1·083	1·07073
	86		86		85		85		85
0·968	0·97251	0·997	0·99743	1·026	1·02224	1·055	1·04696	1·084	1·07158
	86		86		86		85		85
0·969	0·97337	0·998	0·99829	1·027	1·02310	1·056	1·04781	1·085	1·07243
	86		85		85		85		85
0·970	0·97423	0·999	0·99914	1·028	1·02395	1·057	1·04866	1·086	1·07328
	86		86		86		85		84
0·971	0·97509	1·000	1·00000	1·029	1·02481	1·058	1·04951	1·087	1·07412
	86		86		85		85		85
0·972	0·97595	1·001	1·00086	1·030	1·02566	1·059	1·05036	1·088	1·07497
	86		85		85		85		85
0·973	0·97681	1·002	1·00171	1·031	1·02651	1·060	1·05121	1·089	1·07582

TABLE 3—*contd.*

P_1/P_0	$(P_1/P_0)^{6/7}$	P_1/P_0	$(P_1/P_0)^{6/7}$	P_1/P_0	$(P_1/P_0)^{6/7}$	P_1/P_0	$(P_1/P_0)^{6/7}$	P_1/P_0	$(P_1P_0)^{6/7}$
	84		85		85		83		84
1·090	1·07666	1·113	1·09611	1·136	1·11550	1·159	1·13482	1·182	1·15410
	85		84		84		84		84
1·091	1·07751	1·114	1·09695	1·137	1·11634	1·160	1·13566	1·183	1·15494
	85		84		84		84		83
1·092	1·07836	1·115	1·09779	1·138	1·11718	1·161	1·13650	1·184	1·15577
	84		85		84		84		84
1·093	1·07920	1·116	1·09864	1·139	1·11802	1·162	1·13734	1·185	1·15661
	85		84		84		84		84
1·094	1·08005	1·117	1·09948	1·140	1·11886	1·163	1·13818	1·186	1·15745
	84		85		84		84		83
1·095	1·08089	1·118	1·10033	1·141	1·11970	1·164	1·13902	1·187	1·15828
	85		84		84		84		84
1·096	1·08174	1·119	1·10117	1·142	1·12054	1·165	1·13986	1·188	1·15912
	85		84		84		84		84
1·097	1·08259	1·120	1·10201	1·143	1·12138	1·166	1·14070	1·189	1·15996
	84		85		84		84		83
1·098	1·08343	1·121	1·10286	1·144	1·12222	1·167	1·14154	1·190	1·16079
	85		84		84		83		84
1·099	1·08428	1·122	1·10370	1·145	1·12306	1·168	1·14237	1·191	1·16163
	85		84		85		84		83
1·100	1·08513	1·123	1·10454	1·146	1·12391	1·169	1·14321	1·192	1·16246
	84		85		84		84		84
1·101	1·08597	1·124	1·10539	1·147	1·12475	1·170	1·14405	1·193	1·16330
	85		84		84		84		84
1·102	1·08682	1·125	1·10623	1·148	1·12559	1·171	1·14489	1·194	1·16414
	84		84		84		84		83
1·103	1·08766	1·126	1·10707	1·149	1·12643	1·172	1·14573	1·195	1·16497
	85		85		84		83		84
1·104	1·08851	1·127	1·10792	1·150	1·12727	1·173	1·14656	1·196	1·16581
	84		84		84		84		83
1·105	1·08935	1·128	1·10876	1·151	1·12811	1·174	1·14740	1·197	1·16664
	85		84		84		84		84
1·106	1·09020	1·129	1·10960	1·152	1·12895	1·175	1·14824	1·198	1·16748
	84		84		84		84		83
1·107	1·09104	1·130	1·11044	1·153	1·12979	1·176	1·14908	1·199	1·16831
	84		85		84		83		84
1·108	1·09188	1·131	1·11129	1·154	1·13063	1·177	1·14991	1·200	1·16915
	85		84		84		84		
1·109	1·09273	1·132	1·11213	1·155	1·13147	1·178	1·15075		
	84		84		84		84		
1·110	1·09357	1·133	1·11297	1·156	1·13231	1·179	1·15159		
	85		84		84		84		
1·111	1·09442	1·134	1·11381	1·157	1·13315	1·180	1·15243		
	84		84		84		83		
1·112	1·09526	1·135	1·11465	1·158	1·13399	1·181	1·15326		

TABLE 4

x,	$1-(1-x)^{1/2}$		x,	$1-(1-x)^{1/2}$		x,	$1-(1-x)^{1/2}$		x,	$1-(1-x)^{1/2}$		x,	$1-(1-x)^{1/2}$	
0	0				51			51			52			53
			0·029	0·01461		0·058	0·02943		0·087	0·04449		0·116	0·05979	
		50			50			52			52			53
0·001	0·00050		0·030	0·01511		0·059	0·02995		0·088	0·04501		0·117	0·06032	
		50			51			51			53			53
0·002	0·00100		0·031	0·01562		0·060	0·03046		0·089	0·04554		0·118	0·06085	
		50			51			52			52			53
0·003	0·00150		0·032	0·01613		0·061	0·03098		0·090	0·04606		0·119	0·06138	
		50			51			52			53			54
0·004	0·00200		0·033	0·01664		0·062	0·03150		0·091	0·04659		0·120	0·06192	
		50			51			51			52			53
0·005	0·00250		0·034	0·01715		0·063	0·03201		0·092	0·04711		0·121	0·06245	
		50			51			52			52			53
0·006	0·00300		0·035	0·01766		0·064	0·03253		0·093	0·04763		0·122	0·06298	
		51			50			52			53			54
0·007	0·00351		0·036	0·01816		0·065	0·03305		0·094	0·04816		0·123	0·06352	
		50			51			51			53			53
0·098	0·00401		0·037	0·01867		0·066	0·03356		0·095	0·04869		0·124	0·06405	
		50			51			52			52			54
0·009	0·00451		0·038	0·01918		0·067	0·03408		0·096	0·04921		0·125	0·06459	
		50			51			52			53			53
0·010	0·00501		0·039	0·01969		0·068	0·03460		0·097	0·04974		0·126	0·06512	
		51			51			52			52			54
0·011	0·00552		0·040	0·02020		0·069	0·03512		0·098	0·05026		0·127	0·06566	
		50			51			51			53			53
0·012	0·00602		0·041	0·02071		0·070	0·03563		0·099	0·05079		0·128	0·06619	
		50			52			52			53			54
0·013	0·00652		0·042	0·02123		0·071	0·03615		0·100	0·05132		0·129	0·06673	
		50			51			52			52			53
0·014	0·00702		0·043	0·02174		0·072	0·03667		0·101	0·05184		0·130	0·06726	
		51			51			52			53			54
0·015	0·00753		0·044	0·02225		0·073	0·03719		0·102	0·05237		0·131	0·06780	
		50			51			52			53			53
0·016	0·00803		0·045	0·02276		0·074	0·03771		0·103	0·05290		0·132	0·06833	
		51			51			52			53			54
0·017	0·00854		0·046	0·02327		0·075	0·03823		0·104	0·05343		0·133	0·06887	
		50			51			52			53			54
0·018	0·00904		0·047	0·02378		0·076	0·03875		0·105	0·05396		0·134	0·06941	
		51			52			52			52			54
0·019	0·00955		0·048	0·02430		0·077	0·03927		0·106	0·05448		0·135	0·06995	
		50			51			52			53			53
0·020	0·01005		0·049	0·02481		0·078	0·03979		0·107	0·05501		0·136	0·07048	
		51			51			52			53			54
0·021	0·01056		0·050	0·02532		0·079	0·04031		0·108	0·05554		0·137	0·07102	
		50			51			52			53			54
0·022	0·01106		0·051	0·02583		0·080	0·04083		0·109	0·05607		0·138	0·07156	
		51			52			53			53			54
0·023	0·01157		0·052	0·02635		0·081	0·04136		0·110	0·05660		0·139	0·07210	
		50			51			52			53			54
0·024	0·01207		0·053	0·02686		0·082	0·04188		0·111	0·05713		0·140	0·07264	
		51			51			52			53			54
0·025	0·01258		0·054	0·02737		0·083	0·04240		0·112	0·05766		0·141	0·07318	
		51			52			52			53			54
0·026	0·01309		0·055	0·02789		0·084	0·04292		0·113	0·05819		0·142	0·07372	
		50			51			52			53			54
0·027	0·01359		0·056	0·02840		0·085	0·04344		0·114	0·05872		0·143	0·07426	
		51			52			53			54			54
0·028	0·01410		0·057	0·02892		0·086	0·04397		0·115	0·05926		0·144	0·07480	

TABLE 4—*contd.*

x,	$1-(1-x)^{1/2}$		x,	$1-(1-x)^{1/2}$		x,	$1-(1-x)^{1/2}$		x,	$1-(1-x)^{1/2}$		x,	$1-(1-x)^{1/2}$	
		54			55			56			57			58
0·145	0·07534		0·174	0·09115		0·203	0·10725		0·232	0·12364		0·261	0·14035	
		54			55			56			57			58
0·146	0·07588		0·175	0·09170		0·204	0·10781		0·233	0·12421		0·262	0·14093	
		54			56			56			58			58
0·147	0·07642		0·176	0·09226		0·205	0·10837		0·234	0·12479		0·263	0·14151	
		54			55			56			57			59
0·148	0·07696		0·177	0·09281		0·206	0·10893		0·235	0·12556		0·264	0·14210	
		54			55			56			57			58
0·149	0·07750		0·178	0·09336		0·207	0·10949		0·236	0·12593		0·265	0·14268	
		55			55			57			57			58
0·150	0·07805		0·179	0·09391		0·208	0·11006		0·237	0·12650		0·266	0·14326	
		54			55			56			57			59
0·151	0·07859		0·180	0·09446		0·209	0·11062		0·238	0·12707		0·267	0·14385	
		54			55			56			58			58
0·152	0·07913		0·181	0·09501		0·210	0·11118		0·239	0·12765		0·268	0·14443	
		54			56			56			57			58
0·153	0·07967		0·182	0·09557		0·211	0·11174		0·240	0·12822		0·269	0·14501	
		55			55			57			57			59
0·154	0·08022		0·183	0·09612		0·212	0·11231		0·241	0·12879		0·270	0·14560	
		54			55			56			58			59
0·155	0·08076		0·184	0·09667		0·213	0·11287		0·242	0·12937		0·271	0·14619	
		55			56			56			57			58
0·156	0·08131		0·185	0·09723		0·214	0·11343		0·243	0·12994		0·272	0·14677	
		54			55			57			58			59
0·157	0·08185		0·186	0·09778		0·215	0·11400		0·244	0·13052		0·273	0·14736	
		54			55			56			57			58
0·158	0·08239		0·187	0·09833		0·216	0·11456		0·245	0·13109		0·274	0·14794	
		55			56			57			58			59
0·159	0·08294		0·188	0·09889		0·217	0·11513		0·246	0·13167		0·275	0·14853	
		54			55			56			57			59
0·160	0·08348		0·189	0·09944		0·218	0·11569		0·247	0·13224		0·276	0·14912	
		55			56			57			58			59
0·161	0·08403		0·190	0·10000		0·219	0·11626		0·248	0·13282		0·277	0·14971	
		55			56			56			58			58
0·162	0·08458		0·191	0·10056		0·220	0·11682		0·249	0·13340		0·278	0·15029	
		54			55			57			57			59
0·163	0·08512		0·192	0·10111		0·221	0·11739		0·250	0·13397		0·279	0·15088	
		55			56			57			58			59
0·164	0·08567		0·193	0·10167		0·222	0·11796		0·251	0·13455		0·280	0·15147	
		55			55			56			58			59
0·165	0·08622		0·194	0·10222		0·223	0·11852		0·252	0·13513		0·281	0·15206	
		54			56			57			58			59
0·166	0·08676		0·195	0·10278		0·224	0·11909		0·253	0·13571		0·282	0·15265	
		55			56			57			58			59
0·167	0·08731		0·196	0·10334		0·225	0·11966		0·254	0·13629		0·283	0·15324	
		55			56			57			58			59
0·168	0·08786		0·197	0·10390		0·226	0·12023		0·255	0·13687		0·284	0·15383	
		55			56			57			58			59
0·169	0·08841		0·198	0·10446		0·227	0·12080		0·256	0·13745		0·285	0·15442	
		55			55			56			58			59
0·170	0·08896		0·199	0·10501		0·228	0·12136		0·257	0·13803		0·286	0·15501	
		55			56			57			58			60
0·171	0·08951		0·200	0·10557		0·229	0·12193		0·258	0·13861		0·287	0·15561	
		54			56			57			58			59
0·172	0·09005		0·201	0·10613		0·230	0·12250		0·259	0·13919		0·288	0·15620	
		55			56			57			58			59
0·173	0·09060		0·202	0·10669		0·231	0·12307		0·260	0·13977		0·289	0·15679	

TABLE 4—*contd.*

x,	$1-(1-x)^{1/2}$	x,	$1-(1-x)^{1/2}$	x,	$1-(1-x)^{1/2}$	x,	$1-(1-x)^{1/2}$	x,	$1-(1-x)^{1/2}$
	60		60		61		64		65
0·290	0·15739	0·319	0·17477	0·348	0·19253	0·377	0·21070	0·406	0·22929
	59		61		62		63		65
0·291	0·15788	0·320	0·17538	0·349	0·19315	0·378	0·21133	0·407	0·22994
	59		61		62		63		64
0·292	0·15857	0·321	0·17599	0·350	0·19377	0·379	0·21196	0·408	0·23058
	60		60		62		64		65
0·293	0·15917	0·322	0·17659	0·351	0·19439	0·380	0·21260	0·409	0·23123
	59		61		63		63		66
0·294	0·15976	0·323	0·17720	0·352	0·19502	0·381	0·21323	0·410	0·23189
	60		61		62		64		65
0·295	0·16036	0·324	0·17781	0·353	0·19564	0·382	0·21387	0·411	0·23254
	59		61		62		64		65
0·296	0·16095	0·325	0·17842	0·354	0·19626	0·383	0·21451	0·412	0·23319
	60		60		62		63		65
0·297	0·16155	0·326	0·17902	0·355	0·19688	0·384	0·21514	0·413	0·23384
	60		61		62		64		65
0·298	0·16215	0·327	0·17963	0·356	0·19750	0·385	0·21578	0·414	0·23449
	59		61		63		64		66
0·299	0·16274	0·328	0·18024	0·357	0·19813	0·386	0·21642	0·415	0·23515
	60		61		62		64		65
0·300	0·16334	0·329	0·18085	0·358	0·19875	0·387	0·21706	0·416	0·23580
	60		61		63		64		66
0·301	0·16394	0·330	0·18146	0·359	0·19938	0·388	0·21770	0·417	0·23646
	60		62		62		64		65
0·302	0·16454	0·331	0·18208	0·360	0·20000	0·389	0·21834	0·418	0·23711
	59		61		63		64		66
0·303	0·16513	0·332	0·18269	0·361	0·20063	0·390	0·21898	0·419	0·23777
	60		61		62		64		65
0·304	0·16573	0·333	0·18330	0·362	0·20125	0·391	0·21962	0·420	0·23842
	60		61		63		64		66
0·305	0·16633	0·334	0·18391	0·363	0·20188	0·392	0·22026	0·421	0·23908
	60		61		62		64		66
0·306	0·16693	0·335	0·18452	0·364	0·20250	0·393	0·22090	0·422	0·23974
	60		62		63		64		65
0·307	0·16753	0·336	0·18514	0·365	0·20313	0·394	0·22154	0·423	0·24039
	60		61		63		64		66
0·308	0·16813	0·337	0·18575	0·366	0·20376	0·395	0·22218	0·424	0·24105
	61		62		63		65		66
0·309	0·16874	0·338	0·18637	0·367	0·20439	0·396	0·22283	0·425	0·24171
	60		61		63		64		66
0·310	0·16934	0·339	0·18698	0·368	0·20502	0·397	0·22347	0·426	0·24237
	60		62		62		64		66
0·311	0·16994	0·340	0·18760	0·369	0·20564	0·398	0·22411	0·427	0·24303
	60		61		63		65		66
0·312	0·17054	0·341	0·18821	0·370	0·20627	0·399	0·22476	0·428	0·24369
	61		62		63		64		66
0·313	0·17115	0·342	0·18883	0·371	0·20690	0·400	0·22540	0·429	0·24435
	60		61		64		65		67
0·314	0·17175	0·343	0·18944	0·372	0·20754	0·401	0·22605	0·430	0·24502
	60		62		63		65		66
0·315	0·17235	0·344	0·19006	0·373	0·20817	0·402	0·22670	0·431	0·24568
	61		62		63		64		66
0·316	0·17296	0·345	0·19068	0·374	0·20880	0·403	0·22734	0·432	0·24634
	60		62		63		65		67
0·317	0·17356	0·346	0·19130	0·375	0·20943	0·404	0·22799	0·433	0·24701
	61		62		63		65		66
0·318	0·17417	0·347	0·19192	0·376	0·21006	0·405	0·22864	0·434	0·24767

TABLE 4—*contd.*

x,	$1-(1-x)^{1/2}$	x,	$1-(1-x)^{1/2}$	x,	$1-(1-x)^{1/2}$	x,	$1-(1-x)^{1/2}$	x,	$1-(1-x)^{1/2}$
	67		68		68		69		70
0·435	0·24834	0·449	0·25771	0·463	0·26720	0·477	0·27681	0·491	0·28656
	66		67		68		69		70
0·436	0·24900	0·450	0·25838	0·464	0·26788	0·478	0·27750	0·492	0·28726
	67		67		68		70		70
0·437	0·24967	0·451	0·25905	0·465	0·26856	0·479	0·27820	0·493	0·28796
	66		68		69		69		70
0·438	0·25033	0·452	0·25973	0·466	0·26925	0·480	0·27889	0·494	0·28866
	67		68		68		69		71
0·439	0·25100	0·453	0·26041	0·467	0·26993	0·481	0·27958	0·495	0·28937
	67		67		69		70		70
0·440	0·25167	0·454	0·26108	0·468	0·27062	0·482	0·28028	0·496	0·29007
	67		68		68		69		71
0·441	0·25234	0·455	0·26176	0·469	0·27130	0·483	0·28097	0·497	0·29078
	67		68		69		70		70
0·442	0·25301	0·456	0·26244	0·470	0·27199	0·484	0·28167	0·498	0·29148
	67		67		69		69		71
0·443	0·25368	0·457	0·26311	0·471	0·27268	0·485	0·28236	0·499	0·29219
	67		68		68		70		70
0·444	0·25435	0·458	0·26379	0·472	0·27336	0·486	0·28306	0·500	0·29289
	67		68		69		70		
0·445	0·25502	0·459	0·26447	0·473	0·27405	0·487	0·28376		
	67		68		69		70		
0·446	0·25569	0·460	0·26515	0·744	0·27474	0·488	0·28446		
	67		68		69		70		
0·447	0·25636	0·461	0·26583	0·475	0·27543	0·489	0·28516		
	67		69		69		70		
0·448	0·25703	0·462	0·26652	0·476	0·27612	0·490	0·28586		

TABLE 4a

Table of Proportional Parts for Use with Table 4

	×0·1	×0·2	×0·3	×0·4	×0·5	×0·6	×0·7	×0·8	×0·9
50	-5	10	15	20	25	30	35	40	45
51	5	10	15	20	25_5	31	36	41	46
52	5	10	16	21	26	31	36	42	47
53	5	11	16	21	26_5	32	37	42	48
54	5	11	16	22	27	32	38	43	49
55	5_5	11	16_5	22	27_5	33	38_5	44	49_5
56	6	11	17	22	28	34	39	45	50
57	6	11	17	23	28_5	34	40	46	51
58	6	12	17	23	29	35	41	46	52
59	6	12	18	24	29_5	35	41	47	53
60	6	12	18	24	30	36	42	48	54
61	6	12	18	24	30_5	37	43	49	55
62	6	12	19	25	31	37	43	50	56
63	6	13	19	25	31_5	38	44	51	57
64	6	13	19	26	32	38	45	52	58
65	6_5	13	19_5	26	32_5	39	45_5	53	58_5
66	7	13	20	26	33	40	46	54	59
67	7	13	20	27	33_5	40	47	54	60
68	7	14	20	27	34	41	48	54	61
69	7	14	21	28	34_5	41	48	55	62
70	7	14	21	28	35	42	49	56	63
71	7	14	21	28	35_5	43	50	57	64

TABLE 5

$\frac{H_0-p_0}{p_0}$	M_0	$\frac{H_0-p_0}{p_0}$	M_0	$\frac{H_0-p_0}{p_0}$	M_0	$\frac{H_0-p_0}{p_0}$	M_0	$\frac{H_0-p_0}{p_0}$	M_0	$\frac{H_0-p_0}{p_0}$	M_0
0	0	0·055	0·278	0·110	0·389	0·218	0·538	0·365	0·682	0·640	0·871
0·001	0·038	0·056	0·280	.....		0·220	0·541	0·370	0·686	0·645	0·874
0·002	0·053	0·057	$0·282_5$	0·112	0·392	0·222	0·543	0·375	0·690	0·650	0·877
0·003	0·065	0·058	0·285	0·114	0·396	0·224	0·545	0·380	0·694	0·655	0·880
0·004	0·075	0·059	0·287	0·116	0·399	0·226	$0·547_5$	0·385	0·698	0·660	0·883
0·005	0·084	0·060	0·290	0·118	0·402	0·228	0·550	0·390	0·702	0·665	0·885
0·006	0·092	0·061	0·292	0·120	0·406	0·230	0·552	0·395	0·706	0·670	0·888
0·007	0·100	0·062	0·294	0·122	0·409	0·232	0·554	0·400	0·710	0·675	0·891
0·008	0·107	0·063	0·297	0·124	0·412	0·234	0·556	0·405	0·714	0·680	0·894
0·009	0·113	0·064	0·299	0·126	0·415	0·236	0·559	0·410	0·718	0·685	0·897
0·010	0·119	0·065	0·301	0·128	0·418	0·238	0·561	0·415	0·722	0·690	0·899
0·011	0·125	0·066	0·304	0·130	$0·421_5$	0·240	0·563	0·420	0·726	0·695	0·902
0·012	0·131	0·067	0·306	0·132	0·425	0·242	0·565	0·425	0·730	0·700	0·905
0·013	0·136	0·068	0·308	0·134	0·428	0·244	0·567	0·430	$0·733_5$	0·705	0·907
0·014	0·141	0·069	0·310	0·136	0·431	0·246	$0·569_5$	0·435	0·737	0·710	0·910
0·015	0·146	0·070	0·312	0·138	0·434	0·248	0·572	0·440	0·741	0·715	0·913
0·016	0·151	0·071	0·315	0·140	0·437	0·250	0·574	0·445	0·745	0·720	0·915
0·017	0·155	0·072	0·317	0·142	0·440	0·252	0·576	0·450	0·748	0·725	0·918
0·018	0·160	0·073	0·319	0·144	0·443	0·254	0·578	0·455	0·752	0·730	0·921
0·019	0·164	0·074	0·321	0·146	0·446	0·256	0·580	0·460	0·756	0·735	0·923
0·020	0·168	0·075	0·323	0·148	$0·448_5$	0·258	0·582	0·465	0·759	0·740	0·926
0·021	0·173	0·076	0·325	0·150	0·451	0·260	0·584	0·470	0·763	0·745	0·928
0·022	0·177	0·077	0·327	0·152	0·454	0·262	0·586	0·475	0·766	0·750	0·931
0·023	0·181	0·078	0·329	0·154	0·457	0·264	0·588	0·480	0·770	0·755	0·934
0·024	0·184	0·079	0·331	0·156	0·460	0·266	0·590	0·485	0·773	0·760	0·936
0·025	0·188	0·080	0·333	0·158	0·463	0·268	0·592	0·490	0·777	0·765	0·939
0·026	0·192	0·081	0·335	0·160	0·465	0·270	0·594	0·495	0·780	0·770	0·941
0·027	0·195	0·082	0·337	0·162	0·468	0·272	$0·596_5$	0·500	0·784	0·775	0·944
0·028	0·199	0·083	0·339	0·164	0·471	0·274	$0·598_5$	0·505	0·787	0·780	0·946
0·029	0·202	0·084	0·341	0·166	0·474	0·276	$0·600_5$	0·510	0·790	0·785	0·949
0·030	0·206	0·085	0·343	0·168	0·476	0·278	$0·602_5$	0·515	0·794	0·790	0·951
0·031	0·209	0·086	0·345	0·170	0·479	0·280	$0·604_5$	0·520	0·797	0·795	0·954
0·032	0·213	0·087	0·347	0·172	0·482	0·282	$0·606_5$	0·525	$0·800_5$	0·800	0·956
0·033	0·216	0·088	0·349	0·174	0·484	0·284	$0·608_5$	0·530	0·804	0·805	0·959
0·034	0·219	0·089	0·351	0·176	0·487	0·286	0·610	0·535	0·807	0·810	0·961
0·035	0·222	0·090	0·353	0·178	$0·489_5$	0·288	0·612	0·540	0·810	0·815	0·964
0·036	0·225	0·091	0·355	0·180	0·492	0·290	0·614	0·545	0·813	0·820	0·966
0·037	0·228	0·092	0·357	0·182	0·495	0·292	0·616	0·550	0·817	0·825	0·968
0·038	0·231	0·093	0·359	0·184	0·497	0·294	0·618	0·555	0·820	0·830	0·971
0·039	0·234	0·094	0·361	0·186	0·500	0·296	0·620	0·560	0·823	0·835	0·973
0·040	0·237	0·095	0·362	0·188	0·502	0·298	0·622	0·565	0·826	0·840	0·975
0·041	0·240	0·096	0·364	0·190	0·505	0·300	0·624	0·570	0·829	0·845	0·978
0·042	0·243	0·097	0·366	0·192	0·507	.....		0·575	0·832	0·850	0·980
0·043	0·246	0·098	0·368	0·194	0·510	0·305	0·629	0·580	0·836	0·855	0·983
0·044	0·249	0·099	0·370	0·196	0·512	0·310	0·633	0·585	0·839	0·860	0·985
0·045	0·252	0·100	$0·371_5$	0·198	0·515	0·315	0·638	0·590	0·842	0·865	0·987
0·046	0·254	0·101	0·373	0·200	0·517	0·320	$0·642_5$	0·595	0·845	0·870	0·990
0·047	0·257	0·102	0·375	0·202	$0·519_5$	0·325	0·647	0·600	0·848	0·875	0·992
0·048	0·260	0·103	0·377	0·204	0·522	0·330	$0·651_5$	0·605	0·851	0·880	0·994
0·049	0·262	0·104	0·379	0·206	0·525	0·335	0·656	0·610	0·854	0·885	0·996
0·050	0·265	0·105	0·380	0·203	0·527	0·340	0·660	0·615	0·857	0·890	0·999
0·051	$0·267_5$	0·106	0·382	0·210	0·529	0·345	0·665	0·620	0·860	0·895	1·001
0·052	0·270	0·107	0·384	0·212	0·531	0·350	0·669	0·625	0·863		
0·053	0·273	0·108	0·386	0·214	0·534	0·355	0·673	0·630	$0·865_5$		
0·054	0·275	0·109	0·387	0·216	0·536	0·360	0·678	0·635	0·868		

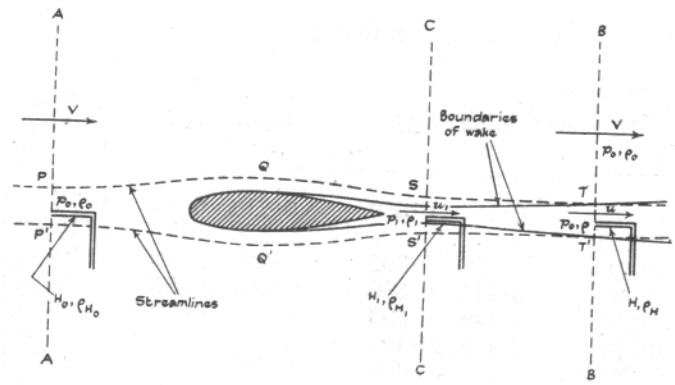

FIG. 1.—Steady Flow of a Compressible Fluid past an Aerofoil.

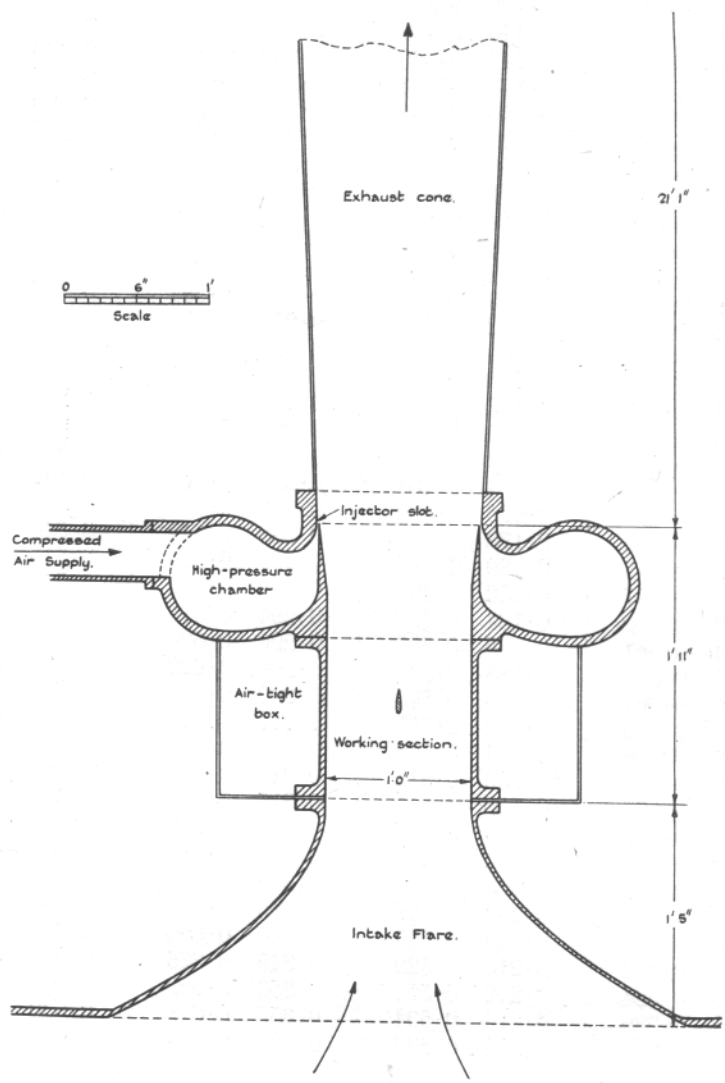

FIG. 2.—High-Speed Wind Tunnel.

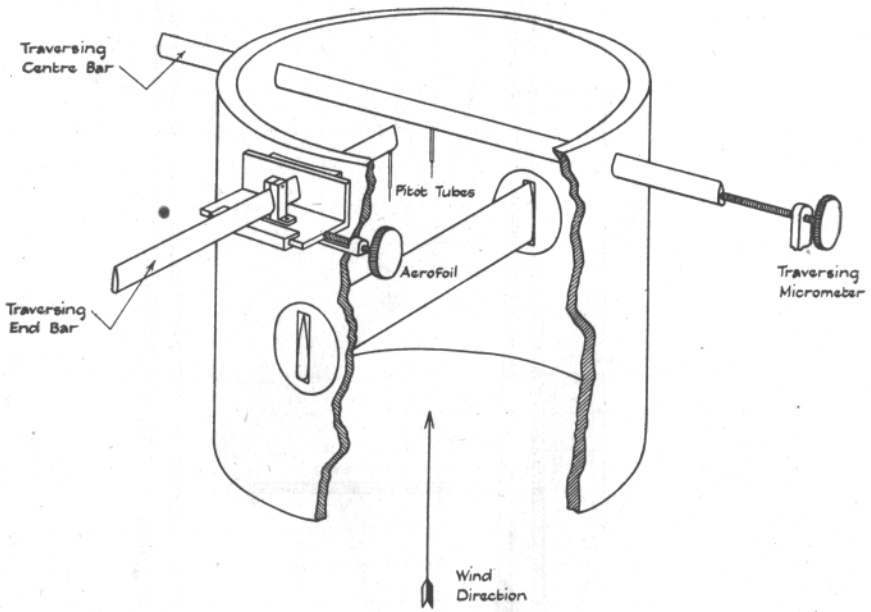

FIG. 3.—Diagrammatic Arrangement of Traversing Bars in the High-Speed Tunnel.

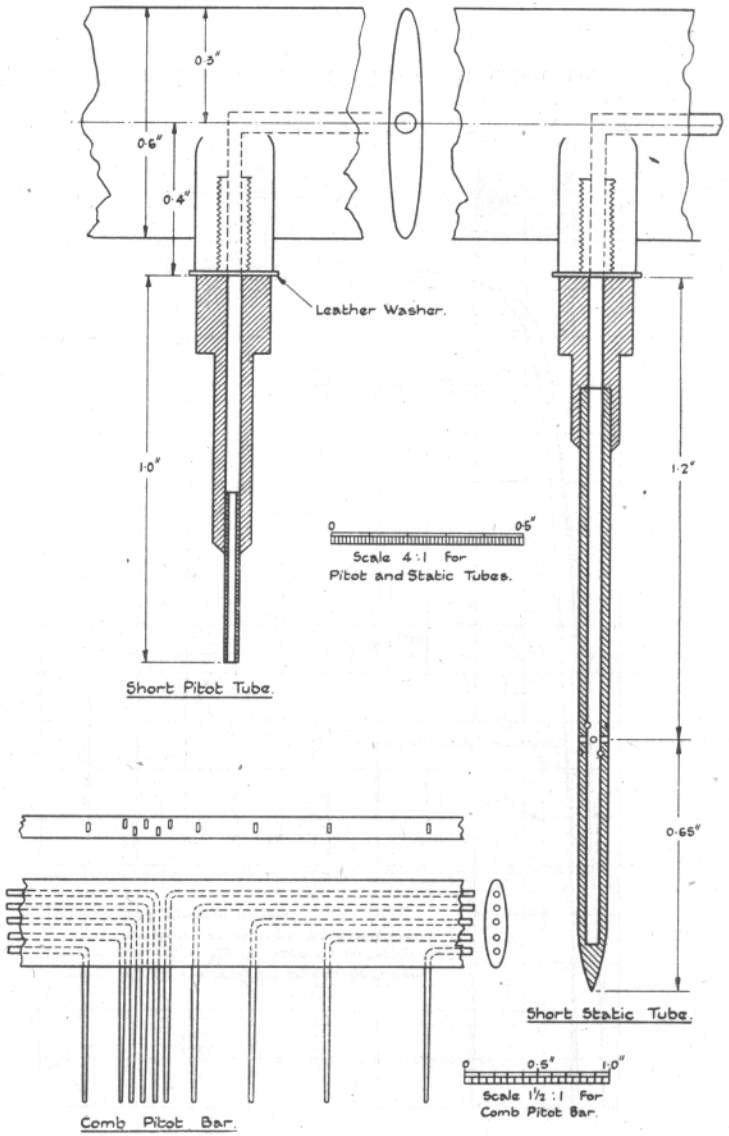

FIG. 4.

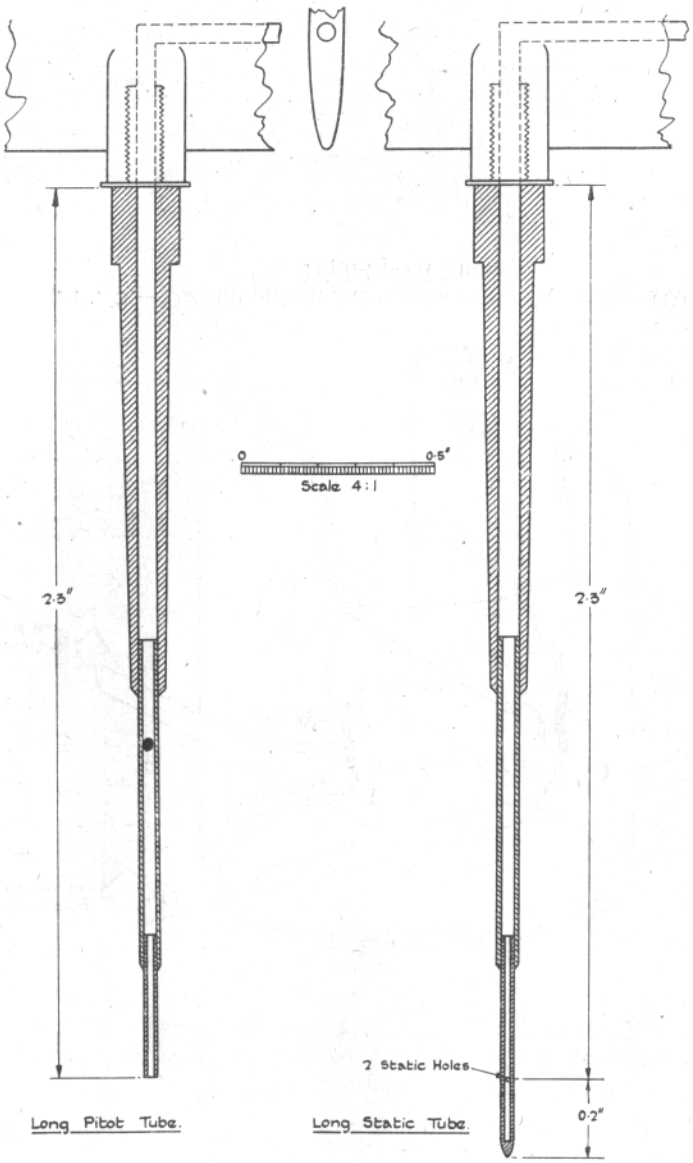

FIG. 5.

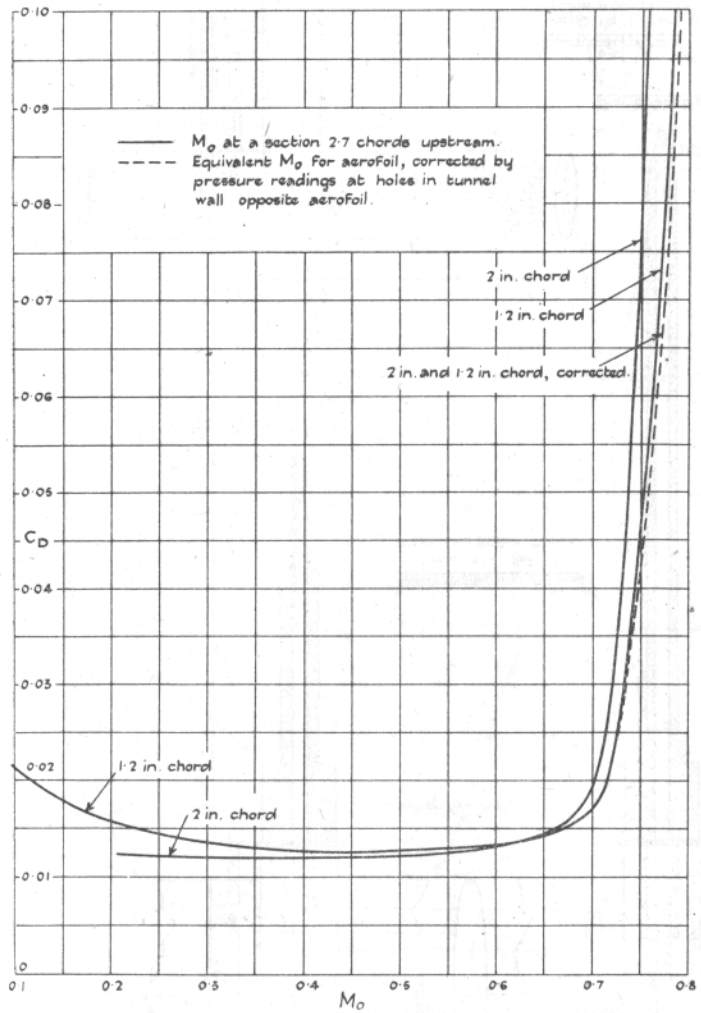

FIG. 6.—Correction to Speed for Tunnel Interference.

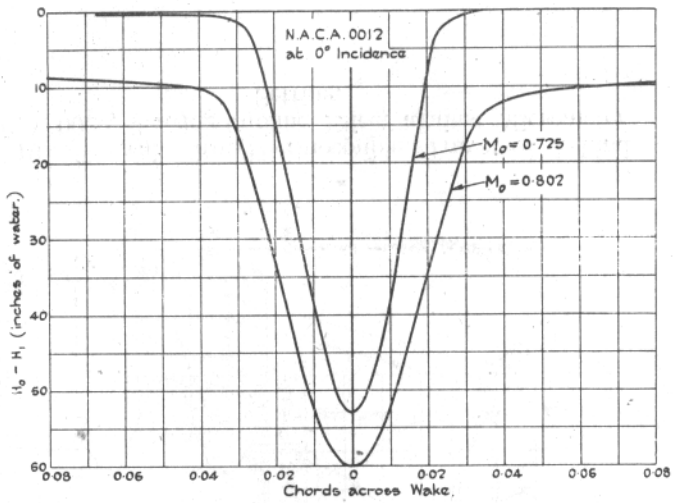

FIG. 7a.

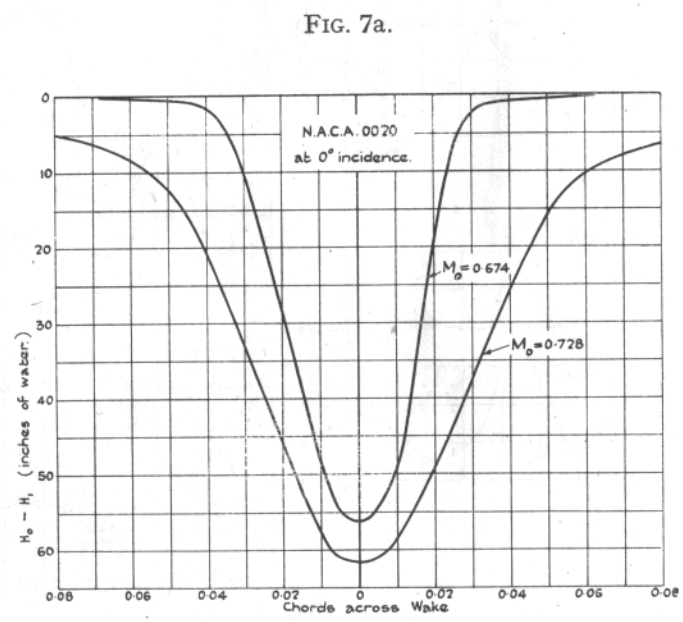

FIG. 7b.—Traverses above and below the Shock Stalling Speed. (0·2 chords behind the trailing edge.)

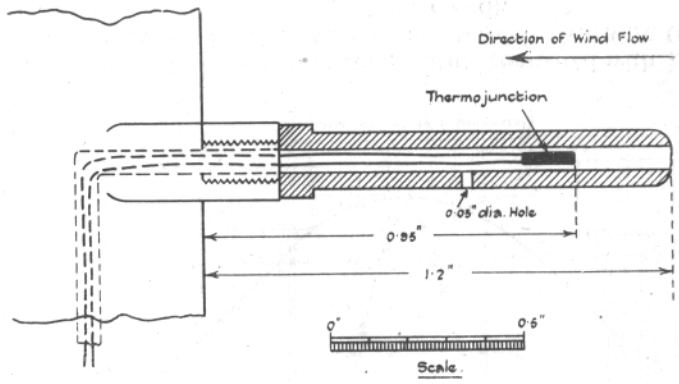

FIG. 8.—Pitot Thermocouple.

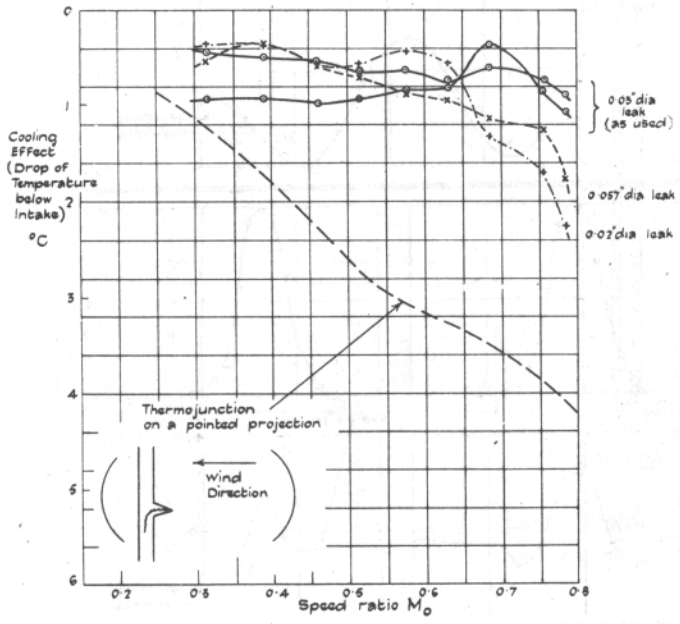

FIG. 9.—Empty Tunnel Calibration of Thermocouples.

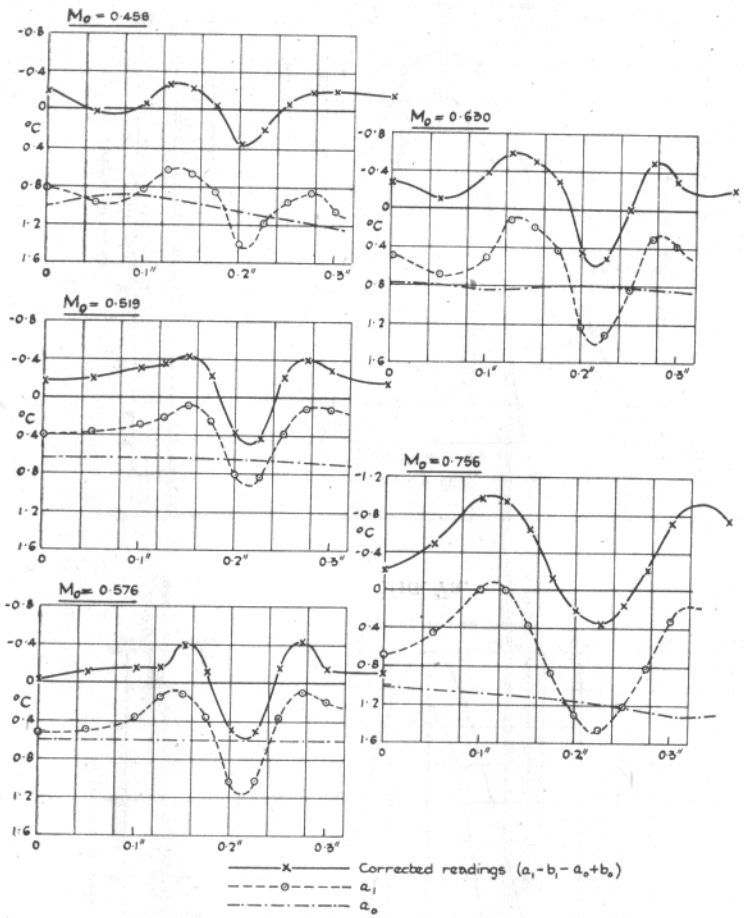

FIG. 10.—Typical Pitot-Thermocouple Traverses behind N.A.C.A. 0020, showing Cooling Effect against Micrometer Setting.

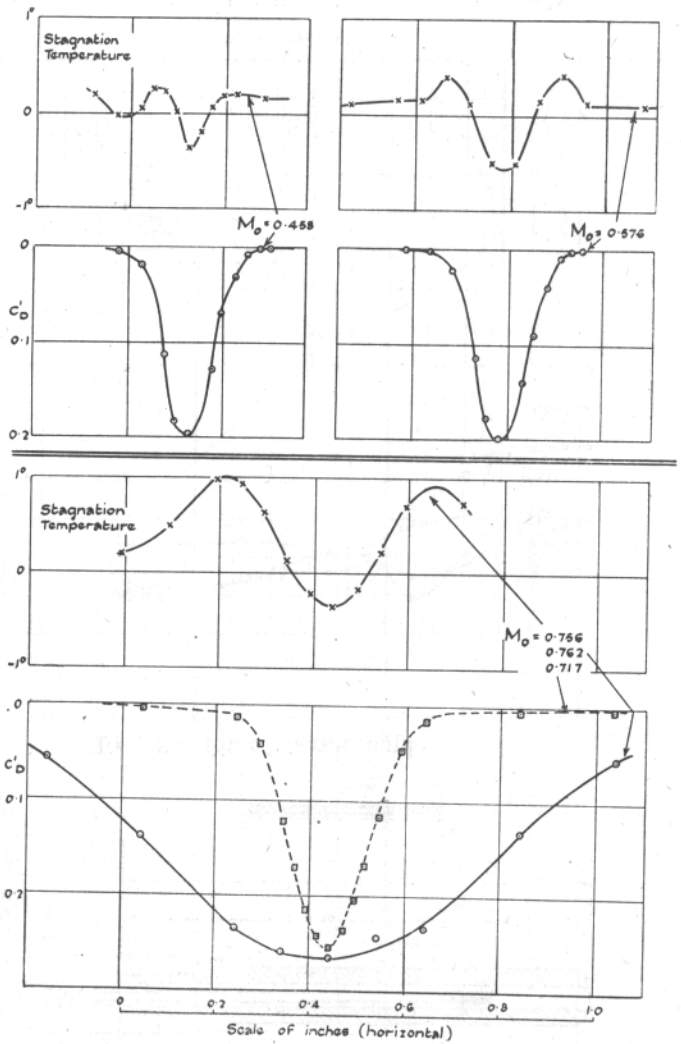

FIG. 11.—Stagnation Temperature compared with Pitot Traverse in the wake of an Aerofoil (N.A.C.A. 0020, 2-in. chord).

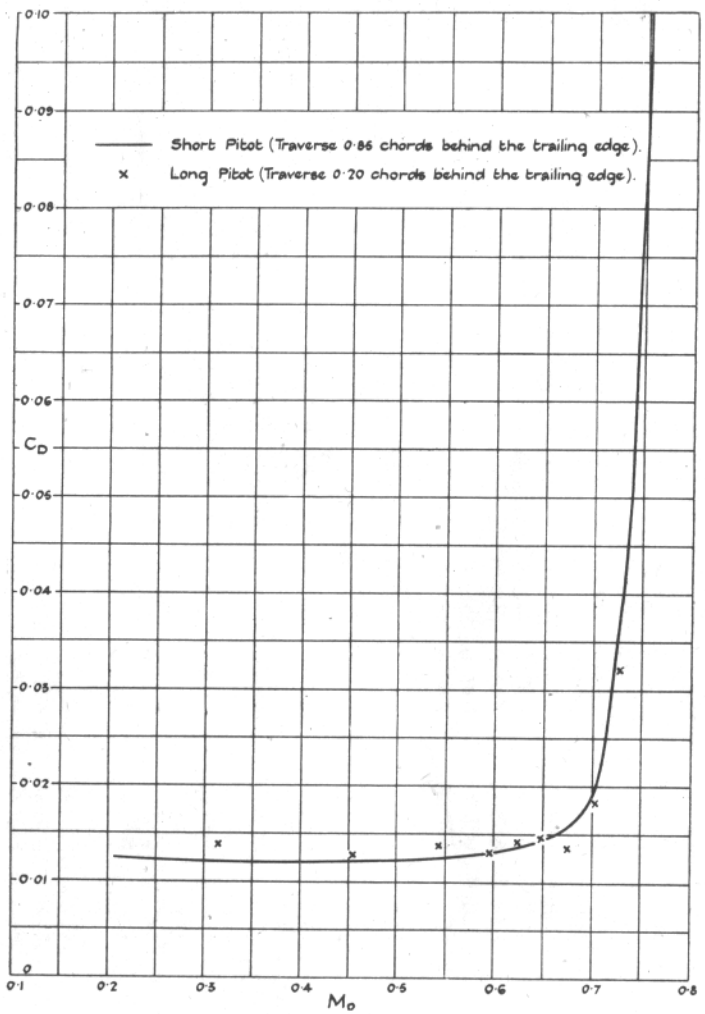

FIG. 12.—Drag Coefficient of N.A.C.A. 0020 (2-in. chord) at 0° Incidence deduced from Traverses at two Distances behind the Trailing Edge.

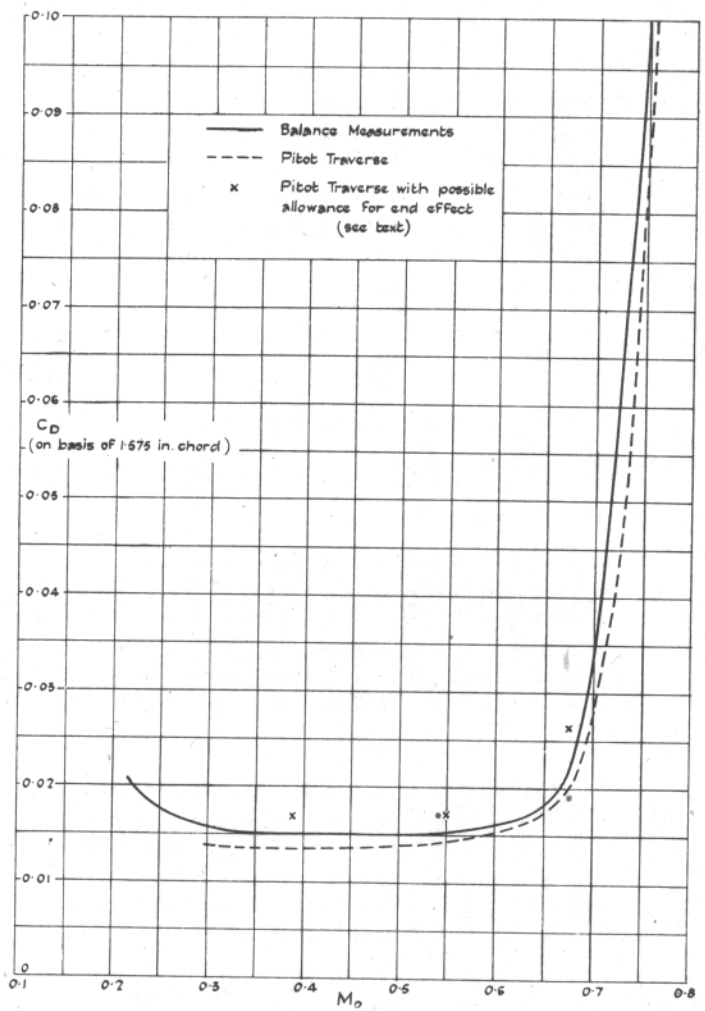

FIG. 13.—Comparison with Balance for a Tapered Aerofoil at 0° Incidence.

(72170) Wt.82982/9 3/46 Hw. G. 377/1

Publications of the Aeronautical Research Committee

TECHNICAL REPORTS OF THE AERONAUTICAL RESEARCH COMMITTEE—

1934-35 Vol. I. Aerodynamics. 40*s.* (40*s.* 8*d.*)
Vol. II. Seaplanes, Structures, Engines, Materials, etc. 40*s.* (40*s.* 8*d.*)
1935-36 Vol. I. Aerodynamics. 30*s.* (30*s.* 7*d.*)
Vol. II. Structures, Flutter, Engines, Seaplanes, etc. 30*s.* (30*s.* 7*d.*)
1936 Vol. I. Aerodynamics General, Performance, Airscrews, Flutter and Spinning. 40*s.* (40*s.* 9*d.*)
Vol. II. Stability and Control, Structures, Seaplanes, Engines, etc. 50*s.* (50*s.* 10*d.*)
1937 Vol. I. Aerodynamics General, Performance, Airscrews, Flutter and Spinning. 40*s.* (40*s.* 9*d.*)
Vol. II. Stability and Control, Structures, Seaplanes, Engines, etc. 60*s.* (61*s.*)

ANNUAL REPORTS OF THE AERONAUTICAL RESEARCH COMMITTEE—

1933-34 1*s.* 6*d.* (1*s.* 8*d.*)
1934-35 1*s.* 6*d.* (1*s.* 8*d.*)
April 1, 1935 to December 31, 1936. 4*s.* (4*s.* 4*d.*)
1937 2*s.* (2*s.* 2*d.*)
1938 1*s.* 6*d.* (1*s.* 8*d.*)

INDEX TO THE TECHNICAL REPORTS OF THE ADVISORY COMMITTEE ON AERONAUTICS—

1909-1919 Reports and Memoranda No. 1600. 8*s.* (8*s.* 5*d.*)

Prices in brackets include postage.

Obtainable from

His Majesty's Stationery Office

London W.C.2: York House, Kingsway
Edinburgh 2: 13A Castle Street
Manchester 2: 39-41 King Street
Cardiff: 1 St. Andrew's Crescent
Belfast: 80 Chichester Street
or through any bookseller.

S.O. Code No. 23-1971