THIS DOCUMENT PROVIDED BY THE ABBOTT AEROSPACE
TECHNICAL LIBRARY
ABBOTTAEROSPACE.COM

C.P. No. 812

LIBRARY
ROYAL AIRCRAFT ESTABLISHMENT
BEDFORD

C.P. No. 812

MINISTRY OF AVIATION

AERONAUTICAL RESEARCH COUNCIL

CURRENT PAPERS

Influence of Chemical Contouring on the Fatigue and Sustained Load Properties of High Tensile Steel Sheet

By

Westland Aircraft Ltd., Saunders-Roe Division

LONDON: HER MAJESTY'S STATIONERY OFFICE

1965

TEN SHILLINGS NET

This Document Provided by the Abbott Aerospace
Technical Library
abbottaerospace.com

THIS DOCUMENT PROVIDED BY THE ABBOTT AEROSPACE
TECHNICAL LIBRARY
ABBOTTAEROSPACE.COM

C.P. No.812

May, 1964

INFLUENCE OF CHEMICAL CONTOURING ON THE FATIGUE AND SUSTAINED LOAD PROPERTIES OF HIGH TENSILE STEEL SHEET

WESTLAND AIRCRAFT LTD., SAUNDERS-ROE DIVISION

Replaces A.R.C.26 155.

THIS DOCUMENT PROVIDED BY THE ABBOTT AEROSPACE
TECHNICAL LIBRARY
ABBOTTAEROSPACE.COM

THIS DOCUMENT PROVIDED BY THE ABBOTT AEROSPACE
TECHNICAL LIBRARY
ABBOTTAEROSPACE.COM

CONTENTS

		PAGE
	SUMMARY	1
	INTRODUCTION	1
PART I	FATIGUE TESTS	
1.	RANGE OF TESTS	1
2.	DESCRIPTION OF SPECIMENS	
	2.1 General	1
	2.2 Material Composition	2
	2.3 Heat Treatments	2
	2.4 Test Groups and Specimen Conditions	2
3.	METHOD OF TEST	
	3.1 General	4
	3.2 Calibration of Test Machine	4
	3.3 Fatigue Tests	4
	3.4 Surface Finish Measurements	4
4.	RESULTS	
	4.1 Fatigue Tests	4
	4.2 Surface Finish	4
	4.3 Control Tests	5
	4.4 Metallurgical Examination	6
5.	DISCUSSION OF RESULTS	
	5.1 RS.130 Material	7
	5.2 RS.140 "	7
	5.3 H.50 "	7
6.	CONCLUSIONS	7
PART II	SUSTAINED LOAD TESTS	
7.	RANGE OF TESTS	8
8.	DESCRIPTION OF SPECIMENS	
	8.1 General	8
	8.2 Heat Treatments	8
	8.3 Chemical Contouring	8
9.	METHOD OF TEST	
	9.1 Control Tests	9
	9.2 Sustained Load Tests	9
10.	RESULTS	9
11.	CONCLUSIONS	10

/TABLES

THIS DOCUMENT PROVIDED BY THE ABBOTT AEROSPACE
TECHNICAL LIBRARY
ABBOTTAEROSPACE.COM

LIST OF TABLES

TABLE		PAGE
I	RS.130 Material - Results of Tests	11
II	RS.140 Material - Results of Tests	14
III	H.50 Material - Results of Tests	17

LIST OF FIGURES AND PLATES

FIG.	
1	Test Specimens
2	Method of Calibration and Test
3	Summary of Results - RS.130 Material
4	" " " - R .140 Material
5	" " " - H.50 Material
6	Details of Load Specimen

PLATE	
1	Sustained Load Test Rig
2	Specimen under test

THIS DOCUMENT PROVIDED BY THE ABBOTT AEROSPACE
TECHNICAL LIBRARY
ABBOTTAEROSPACE.COM

SUMMARY

Reverse bend fatigue and sustained load tests have been carried out on three low alloy steel sheet materials, 1% Cr-Mo, 3% Cr-Mo-V, and 5% Cr-Mo-V, heat treated to 88, 103 and 121 t.s.i. respectively, and chemically contoured in acid etching solutions developed by Bristol Aerojet Ltd.

All three steels showed the lowest fatigue properties in the as received condition, intermediate properties after machining or grinding and the highest properties after chemical contouring. The high properties after chemical contouring were sometimes, but not always due to removal of a decarburised surface layer.

The chemical contouring process caused no failures under sustained load at high proportions of the notched tensile strength.

Phosphate treatment after chemical contouring caused a slight reduction of fatigue properties and very slight embrittlement.

INTRODUCTION

A research programme was undertaken to investigate the effect of chemical contouring on the fatigue and sustained load characteristics of high tensile steel sheet.

The test programme was carried out by the Saunders-Roe Division of Westland Aircraft Ltd., in conjunction with Bristol Aerojet Ltd. who supplied the specimens and developed the chemical contouring processes for the steels tested. The development of these processes is covered in S. & T. Memo 23/60 and D.Mat. & S. Report No. 114. The contouring processes used were the preferred processes summarised in Sections 3.2.3 and 10 of D.Mat. Report 114.

PART I FATIGUE TESTS

1. RANGE OF TESTS

It was required to investigate the effect of chemical contouring on the fatigue characteristics of three sheet materials, and to compare the results with the fatigue characteristics of specimens in the 'as received' condition and specimens which had been reduced in thickness by the more conventional methods of grinding and machine milling.

The three steels tested were 1% chromium-molybdenum steel to Bristol Aerojet Ltd. specification RS.130, 3% chromium-molybdenum-vanadium steel to Bristol Aerojet Ltd. specification RS.140, and 5% chromium-molybdenum-vanadium steel, H.50, supplied by Jessop-Saville Ltd.

2. DESCRIPTION OF SPECIMENS

2.1 General

18 groups of specimens, of dimensions shown in Fig. 1, were supplied by Bristol Aerojet Ltd. They had been cut from 13 s.w.g. rolled sheet with the exception of groups 1 and 2 which had been cut from 15 s.w.g. material. After profiling, the specimens had been heat treated as described in para. 2.3 to give the 'as received' condition. Groups 5 to 8 and 11 to 18 had then been reduced in thickness by either grinding, machine milling or chemical contouring, the material being removed equally from each surface. The number of specimens in each group is given in para. 2.4

THIS DOCUMENT PROVIDED BY THE ABBOTT AEROSPACE
TECHNICAL LIBRARY
ABBOTTAEROSPACE.COM

2.2 Material Composition

RS.130 (S.A.E.4130 type)

	C	Mn.	Si.	S.	P.	Ni.	Cr.	Mo.	Fe.
%	.315	.49	.23	.01	.014	.17	.97	.2	Remainder

RS.140 (En 40c type)

	C	Mn.	Si.	S.	P.	Ni.	Cr.	Mo.	V.
%	.37	.66	.25	.008	.01	.07	3.09	.86	.14

H.50

	C	Mn.	Si.	S.	P.	Ni.	Cr.	Mo.	V.
%	.41	.50	.90	.012	.009	.29	5.08	1.35	1.11

2.3 Heat Treatments

RS.130 The specimens had been hardened at 900°C. for 40 minutes, oil quenched, and tempered at 450°C. for 1 hour.

RS.140 The specimens had been hardened at 940°C. for 40 minutes, oil quenched, and tempered at 550°C. for 1 hour.

H.50 The specimens had been air hardened from 1000°C., and tempered at 580°C. for 60 minutes.

2.4 Test Groups and Specimen Conditions

2.4.1 RS.130 material

Group 1	15 s.w.g. (0.072 in.) 'as received' condition, descaled by pickling in 'Ferroclene 100'.	19 off
Group 2	15 s.w.g. 'as received' condition, pickled, phosphated, baked and stained.	19 off
Group 3	13 s.w.g. (0.092 in.) 'as received' condition, descaled by pickling in 'Ferroclene 100'.	20 off
Group 4	13 s.w.g. 'as received' condition, pickled, phosphated, baked and stained.	20 off
Group 5	13 s.w.g. Rough milled to approximately .064".	18 off
Group 6	13 s.w.g. Rough milled to approximately .064", pickled, phosphated, baked and stained.	19 off
Group 7	13 s.w.g. Chemically Contoured to approximately .064", phosphated, baked and stained.	22 off

This group consisted originally of 20 specimens but on examination it was found that the edges of some specimens were badly notched and serrated. The three worst specimens were rejected and a further 5 specimens, which had better edges but which were not phosphated, baked and stained, were supplied, thus making a total of 17 original and 5 replacement specimens.

THIS DOCUMENT PROVIDED BY THE ABBOTT AEROSPACE
TECHNICAL LIBRARY
ABBOTTAEROSPACE.COM

Group 8	13 s.w.g. Chemically contoured to approximately .064". Edges of waisted section hand polished. Subsequent to the testing of group 7, this group was introduced to check the effect on endurances of extra fine edge definition.	6 off

2.4.2 RS.140

Group 9	13 s.w.g. (0.092 in.) 'as received' condition, descaled by pickling in 'Ferroclene 100'.	20 off
Group 10	13 s.w.g. 'as received' condition, pickled, phosphated, baked and stained.	20 off
Group 11	13 s.w.g. Machined to .06", pickled, phosphated, baked and stained.	20 off
Group 12	13 s.w.g. Ground to .06", pickled, phosphated, baked and stained.	20 off
Group 13	13 s.w.g. Chemically contoured to .06".	20 off
Group 14	13 s.w.g. Chemically contoured to .06", pickled, phosphated, baked and stained.	20 off
Group 15	13 s.w.g. Chemically contoured to .06", edges of waisted section hand polished.	16 off

2.4.3 H.50

Group 16	13 s.w.g. (0.092 in.) Ground to .064", phosphated, baked and stained.	20 off
Group 17	13 s.w.g. Rough milled to .064", phosphated, baked and stained.	20 off
Group 18	13 s.w.g. Chemically contoured to .064", phosphated, baked and stained.	19 off

2.4.4 Pickle, Phosphate, Bake and Stain treatments

Details of pickle, phosphate, bake and stain treatments for the RS.130 and RS.140 specimens were as follows:-

1) Pickle for 20 minutes in 'Ferroclene 100' at 110°-120°F.

2) Phosphate to DEF-29, class II, by immersion for 10 minutes in 'Bonderite 65' (40 point solution) at 140°-145°F.

3) Hot water swill and chromate passivation rinse.

4) Dry.

5) Bake for not less than 1 hour at 150°C. (302°F.).

6) Apply Pyrene P.41c, black spirit lacquer stain.

The treatment of the H.50 specimens differed from the above in two respects - they were not pickled and were de-embrittled as required by DEF-29 and DTD.934 by baking for 4 hours at 200°C. instead of not less than 1 hour at 150°C.

THIS DOCUMENT PROVIDED BY THE ABBOTT AEROSPACE
TECHNICAL LIBRARY
ABBOTTAEROSPACE.COM

3. METHOD OF TEST

3.1 General

All the specimens were tested on three Avery Reverse Plane Bend Machines type 7303, Serial Nos. E 47419/11, E 55515/10 and E 61783/2.

3.2 Calibration of Test Machines

Calibration was carried out by using a loading lever extension arm and deadweights as shown in Fig. 2. Each specimen was individually calibrated because of variation in the widths and thicknesses.

3.3 Fatigue Tests

Each specimen was measured with a micrometer to obtain width and thickness in order to calculate the bending moment to give the required stress level. The variable crank on the test machine was then adjusted to give the required dial gauge deflection determined from the calibration curve for the specimen.

3.4 Surface Finish Measurements

Surface finish measurements were made, after the completion of the fatigue tests, using a Taylor Hobson 'Talysurf' Model 3 instrument, the readings being taken over a 5/16" long stroke at the mid-length of the specimens.

4. RESULTS

4.1 Fatigue Tests

The results are tabulated in Tables I to III and summary plots are shown in Figures 3, 4 and 5.

Long endurance specimens were initially allowed to run for approximately 30×10^6 cycles, but this was later reduced to 15×10^6 cycles before terminating the test. One specimen in group 14 was allowed to run 101×10^6 cycles without failure.

4.2 Surface Finish

Surface finish measurements were taken on random selected specimens of all groups, with the exception of groups 2, 3 and 4 which were in the same 'as received' condition as group 1.

Group	Material	C.L.A. - Micro Inches		Condition
		Longitudinal	Transverse	
1	RS.130	20-65	-	As received
5	"	90-200+	-	Rough milled
6	"	125-200+	-	" "
7	"	45-155	-	Chemically contoured
8	"	70-138	-	" "
9	RS.140	100-168	40-75	As received
10	"	140-200+	150-188	" "
11	"	20-48	35-42	Machined
12	"	12-20	12-17	Ground
13	"	82-100	68-95	Chemically contoured
14	"	52-55	88-92	" "
15	"	62-63	60-66	" "
16	H.50	35-95	-	Ground
17	"	20-70	-	Rough milled
18	"	50-100	-	Chemically contoured

THIS DOCUMENT PROVIDED BY THE ABBOTT AEROSPACE
TECHNICAL LIBRARY
ABBOTTAEROSPACE.COM

4.3 Control Tests

All material control tests were carried out by Bristol Aerojet Ltd. The results were as follows:-

RS.130

Material Gauge	.1% Proof Stress. T/in.^{2}	.2% Proof Stress. T/in.^{2}	Ultimate Stress. T/in.^{2}	Elongation % on 2 ins.
15 s.w.g.	75.7	76.9	84.8	9½
"	80.0	80.5	88.9	10
13 s.w.g.	79.0	80.1	89.8	10
"	79.7	80.3	89.0	9½

RS.140

Material Gauge	.1% Proof Stress. T/in.^{2}	.2% Proof Stress. T/in.^{2}	Ultimate Stress. T/in.^{2}	Elongation % on 2 ins.
13 s.w.g.	76.8	82.9	102.0	8½
"	77.3	83.6	102.8	9½
"	81.5	86.9	103.8	10
"	82.5	87.7	105.0	9½

H.50

Material Gauge	.1% Proof Stress. T/in.^{2}	.2% Proof Stress. T/in.^{2}	Ultimate Stress. T/in.^{2}	Elongation % on 2 ins.
13 s.w.g.	82.6	94.3	121.1	6½
"	82.1	94.8	121.6	6½
"	84.4	96.1	121.5	7½
"	84.8	96.7	122.5	7½

THIS DOCUMENT PROVIDED BY THE ABBOTT AEROSPACE
TECHNICAL LIBRARY
ABBOTTAEROSPACE.COM

4.4 Metallurgical Examination

4.4.1 Hardness Tests

Hardness tests were carried out on the surfaces, edges and cores of specimens from each group, several impressions being made on each specimen. The results were as follows:-

Group	Material	Vickers Pyramid Nos.			Approximate U.T.S. - T/in.^{2} based on Core Hardness
		Surface	Edge	Core	
1	RS.130	315-301	380	380	80
2	"	277	358-329	380	80
3	"	309	391	397	84
4	"	344	348	397	84
5	"	390	346	390	82
6	"	381	343	390	82
7	"	402	398	397	84
8	"	390	390	397	84
9	RS.140	383-409	297-330	561	120
10	"	281-294	330-336	554	119
11	"	548-560	542-560	547	117
12	"	579-592	450-503	554	119
13	"	579-627	560-572	568	122
14	"	599-620	579-599	571	122
15	"	579-585	514-572	554	119
16	H.50	542-545	560-606	543-557	117-119
17	"	548-582	579-585	540-564	116-121
18	"	575-592	572-596	564-579	121-125

4.4.2 Decarburisation

Sections were then cut from each of these specimens and examined for decarburisation in a Vickers Projection microscope. The results were as follows:-

Group	Material	Depth of Decarburisation Inches		Condition
		Surface	Edge	
1	RS.130	.005	.003	As received
2	"	.005	.002	" " P.P.B. & S. *
3	"	.004	.003	" "
4	"	.006	.0025	" " P.P.B. & S. *
5	"	Nil	.004	Rough milled
6	"	Nil	.002	" " P.P.B. & S. *
7	"	Nil	Nil	Chemically contoured P.B. & S.*
8	"	Nil	Nil	" " Edges polished
9	RS.140	.002	.001	As received
10	"	.002	.001	" " P.P.B. & S. *
11	"	Nil	Nil	Machined P.P.B. & S. *
12	"	Nil	Nil	Ground P.P.B. & S. *
13	"	Nil	Nil	Chemically contoured
14	"	Nil	Nil	" " P.P.B.& S.*
15	"	Nil	Nil	" " Edges polished
16	H.50	Nil	Nil	Ground P.B. & S. *
17	"	Nil	Nil	Rough milled P.B. & S. *
18	"	Nil	Nil	Chemically contoured P.B. & S.*

* Note: P.P.B. & S. = Pickled, Phosphated, Baked and Stained.
P.B. & S. = Phosphated, Baked and Stained.

THIS DOCUMENT PROVIDED BY THE ABBOTT AEROSPACE
TECHNICAL LIBRARY
ABBOTTAEROSPACE.COM

5. DISCUSSION OF RESULTS

5.1 RS.130 Material

The results summarized in Fig. 3 show that the endurance limits vary from 16 ton/in.^{2} to over 32 ton/in.^{2}. As might be expected, the relative order of endurance appears to be related to the degree of decarburisation. Groups 1- 4 having both surface and edge decarburisation have the lowest endurance limits, Groups 5 and 6 with only edge decarburisation have higher limits, and for Group 7, with no decarburisation, the limit is 4 ton/in.^{2} higher still.

The low results of Groups 5 and 6 can also be partly attributed to the poor machine finish of the surfaces.

Group 7 gave a lower endurance limit than expected due to the very poor edge finish of these specimens. This is confirmed by the fact that Group 8, with very good edge finishes, had an endurance limit of 32 ton/in.^{2} which was 8 ton/in.^{2} better than Group 7. Chemical contouring therefore improved fatigue properties by removing the decarburised surface layers; it seems unlikely that the improvement was any less than it might have been because of any concomitant adverse effect from the contouring process.

5.2 RS.140 Material

There appears to be some discrepancy between the ultimate strengths obtained from the control test specimens (para. 4.3) and the ultimate strength based on the core hardness figures obtained from specimens after testing (para. 4.4.1). This may be accounted for to some extent by the decarburisation of the surfaces of Groups 1 and 2 but not for the other groups in which no decarburisation was detected.

The results summarised in Fig.4 show that the endurance limits vary from approximately 13 ton/in.^{2} to 35 ton/in.^{2}. Groups 9 and 10 with some very slight surface and edge decarburisation had the lowest endurance limits as expected.

All three conditions of chemically contoured material appeared to have roughly the same fatigue characteristics but the phosphating of Group 14 resulted in a slight reduction in the endurance limit of this group. No benefit seemed to be gained by polishing the edges of Group 15 as compared with Group 13, which had unpolished edges, but Group 13 showed more scatter in results than is usually obtained.

Groups 11 and 12, machined and ground respectively, exhibited equal endurance limits of approximately 28 ton/in.^{2}, although slightly better endurances were obtained with the ground specimens at the higher stress levels.

On this material, chemical contouring led to higher fatigue strengths than machining or grinding. The as received sheet, which had a slightly decarburised surface, had low fatigue properties.

5.3 H.50 Material

The results summarised in Fig.5 show that the endurance limits vary from approximately 21 ton/in.^{2} to 36 ton/in.^{2} with the chemical contouring giving much the better results. No decarburisation was detected in this material.

6. CONCLUSIONS

All three steels showed the lowest fatigue properties in the as received condition, intermediate properties after machining or grinding, and the highest properties after chemical contouring. The high properties after chemical contouring were sometimes, but not always, due to complete removal of a decarburised surface layer.

THIS DOCUMENT PROVIDED BY THE ABBOTT AEROSPACE
TECHNICAL LIBRARY
ABBOTTAEROSPACE.COM

The pickling, phosphating, baking and staining treatments, applied after chemical contouring to the RS.140 material caused a slight reduction in fatigue properties.

PART II SUSTAINED LOAN TESTS

7. RANGE OF TESTS

The three steels tested were the same as those in Part I.

The results of tests on the RS.130 specimens are contained in S. & T. Memo. 23/60.

8. DESCRIPTION OF TEST SPECIMENS

8.1 General

All the specimens were supplied by Bristol Aerojet Ltd., who also carried out all the treatments.

A sketch of the specimen used is shown in Fig. 6.

The majority of the tests carried out were on notched specimens, either edge or face notched. Initially edge notched specimens were used but these had the disadvantage that the notch, which was cut before contouring, became enlarged during the contouring process to a degree dependent on the depth of contouring. The angle, depth, and root radius of the notches thus varied from batch to batch. Because of this problem face notched specimens were also used. These notches were cut on one side of the specimen only before contouring and material was contoured only from the opposite side. This type of notch had the disadvantage, however, that where there was any curvature along the longitudinal axis arising from machining or heat treatment distortion, bending stresses were applied to the root of the notch on straightening and gave rise to erratic results, particularly on notched ultimate tensile control tests.

Details of both types of notch are shown in Fig. 6.

8.2 Heat Treatments

The hardening heat treatments for RS.140 were:-

(a) Martempered by austenitising in air for 40 minutes at 940°C., transferred to an air furnace held at 510°C. and soaked for 60 minutes. They were then oil quenched and tempered in air for 60 minutes at 300°C.

(b) Hardened by austenitising in air for 40 minutes at 940°C., oil quenched and then tempered in air for 60 minutes at 550°C.

H.50 was austenitised at 1000°C., air cooled, and tempered for 60 minutes at 580°C.

8.3 Chemical Contouring

All specimens were chemically contoured in the fully heat treated condition. Before chemical contouring, specimens were degreased in trichlorethylene vapour and pickled in Ferroclene 100.

THIS DOCUMENT PROVIDED BY THE ABBOTT AEROSPACE
TECHNICAL LIBRARY
ABBOTTAEROSPACE.COM

9. METHOD OF TESTING

9.1 Control Tests

These were carried out by Bristol Aerojet Ltd. Notched tensile control specimens, where required, were processed with each batch.

9.2 Sustained Load Tests

A photograph of a test rig is shown in Plate 1. Each rig consists of a frame carrying a loading beam with a lever ratio of approximately 40: 1. The fulcrum and loading points are knife edges. The upper holder is attached to the frame while the lower one is attached to the beam. The specimens were bolted between bushes which are carried in the holders to provide pin joint ends (see Plate 2). The load pan is attached to the beam by an extension link by two pins horizontally in line.

With the specimen fitted and the beam adjusted to an approximately horizontal position by means of the screw on the upper holder the load was then applied by fitting a hand lever into the extension link and raising the weight pan until the second pin could be inserted in the extension link. The full weight was then transferred gently to the specimen and the hand lever removed.

An electric clock wired in series with a micro-switch bearing on the beam was used to record the time of failure.

All specimens were measured up and the loads to be applied specified by Bristol Aerojet Ltd.

10. RESULTS

Batch A Plain Specimens.

RS.140 chemically contoured from 0.104" to 0.050".

Heat treatment	Hardened and tempered		Martempered	
U.T.S. T/in.^{2}	105.8	105.3	121.2	116.7
0.1% P.S. T/in.^{2}	78.7	78.7	84.7	84.4
Elongation	9.0%	9.0%	6.5%	7.0%

Six martempered and six hardened and tempered specimens were tested, three of each at 110% and three at 125% of 0.1% P.S. All the specimens were removed unbroken from the rigs after 28 days.

Batch B Face notched specimens

Martempered RS.140 chemically contoured from 0.104" to 0.064".

Notched U.T.S. 94.2 - 118.0 T/in.^{2}

One specimen was loaded at 80%, one at 90% and two at 95% of 94.2 T/in.^{2}. As no failures occurred within 24 days Bristol Aerojet asked for the loads on the two specimens loaded at 95% of 94.2 T/in.2 to be increased by gentle addition of weights to the pan to 90% of 118.0 T/in.^{2}. The first two specimens were removed from the rigs unbroken after 28 days and the latter after a further 28 days at the increased loading.

Batch C Edge notched specimens

RS.140 chemically contoured from 0.104" to 0.064".

Heat treatment	Hardened and tempered		Martempered	
U.T.S. T/in.^{2}	110.2	110.4	121.1	121.9
0.1% P.S. T/in.^{2}	77.7	77.8	90.2	91.8
Elongation	7.0%	8.5%	6.5%	6.0%
N.U.T.S. T/in.^{2}	116.1		131.2	

THIS DOCUMENT PROVIDED BY THE ABBOTT AEROSPACE
TECHNICAL LIBRARY
ABBOTTAEROSPACE.COM

Three hardened and tempered, and three martempered specimens were loaded at 90% N.U.T.S. and a further three of each at 95% N.U.T.S. There were no failures within 28 days.

Batch D Face notched specimens

RS.140 Chemically contoured from 0.104" to 0.064".

Heat treatment	Hardened and tempered		Martempered	
U.T.S. T/in.^{2}	108.5	109.1	116.4	116.7
0.1% P.S. T/in.^{2}	75.7	75.8	88.2	87.4
Elongation	8.0%	5.5%	7.5%	8.0%
N.U.T.S. T/in.^{2}	108.8 *		115.5 *	

Three specimens of each heat treatment condition were loaded at 90% N.U.T.S. and two of each at 80% N.U.T.S. No failures occurred within 28 days.

* The notched tensile strengths quoted above are those covering these particular specimens but further notched tensile tests on similarly treated material gave extremely erratic results within the range 80.0-112.0 T/in.^{2} for hardened and tempered specimens, and 70.0-116.0 T/in.^{2} for martempered ones.

Batch E Edge notched specimens

RS.140 chemically contoured from 0.104" to 0.064". Immediately after contouring, specimens were phosphated in Bonderite 65, baked for 4 hours at 200°C. and stained with Pyrene finish P41C.

Heat treatment	Hardened and tempered		Martempered	
U.T.S. T/in.^{2}	107.9	106.1	120.1	120.8
0.1% P.S. T/in.^{2}	79.9	77.9	92.5	90.6
Elongation	10.5%	9.5%	5.5%	6.5%
N.U.T.S. T/in.^{2}	125.6		134.2	

Three specimens of each heat treatment condition were loaded at 90% N.U.T.S. and three of each at 95% N.U.T.S. A martempered specimen loaded at 95% N.U.T.S. failed between 240 - 305 hours after loading, this was the only failure within 28 days.

Batch F Edge notched specimens

H.50 chemically contoured from 0.120" - 0.064".

U.T.S. T/in.^{2}	121.4	121.6
0.1% P.S. T/in.^{2}	82.0	82.3
Elongation	7.0%	7.5%
N.U.T.S. T/in.2	117.0	

Four specimens were loaded at 80% N.U.T.S., four at 90% N.U.T.S., and four at 95% N.U.T.S. There were no failures within 28 days.

11. CONCLUSIONS

These tests have shown that RS.140 and H.50 are not embrittled by the Bristol Aerojet chemical contouring process.

When chemically contoured RS.140 was phosphated, baked and stained there was one failure at 95% of the notched U.T.S. but none at 90%. This failure was probably due to the embrittling action of the phosphating process rather than that of the chemical contouring.

THIS DOCUMENT PROVIDED BY THE ABBOTT AEROSPACE
TECHNICAL LIBRARY
ABBOTTAEROSPACE.COM

TABLE I

RS.130 MATERIAL - RESULTS OF TESTS

GROUP 1	
Stress T/in.^{2}	Endurance cycles
56	20,000
	34,000
	20,000
LOG MEAN	23,870
44	48,000
40	103,000
	90,000
LOG MEAN	96,270
36	116,000
	86,000
LOG MEAN	99,880
32	153,000
	140,000
LOG MEAN	146,350
28	✓1,399,000
	240,000
LOG MEAN	579,430
24	467,000
	505,000
LOG MEAN	485,620
20	✓5,863,000
	1,163,000
	1,644,000
LOG MEAN	2,238,200
18.4	2,792,000
16	*15,227,000

GROUP 2	
Stress T/in.^{2}	Endurance cycles
48	34,000
	31,000
LOG MEAN	32,460
36	80,000
	66,000
	74,000
	58,000
LOG MEAN	68,990
24	325,000
	271,000
	244,000
	254,000
LOG MEAN	271,830
20	821,000
	345,000
	759,000
	489,000
LOG MEAN	569,370
18.4	1,275,000
	1,233,000
	784,000
LOG MEAN	1,072,300
16	*11,193,000
	*15,469,000

GROUP 3	
Stress T/in.^{2}	Endurance cycles
40	67,000
	61,000
	55,000
	71,000
LOG MEAN	63,210
32	150,000
	153,000
	168,000
	198,000
LOG MEAN	166,230
24	492,000
	407,000
	439,000
	525,000
LOG MEAN	463,450
20	1,455,000
	724,000
	✓1,990,000
	1,408,000
LOG MEAN	1,310,800
18.4	1,590,000
	1,932,000
LOG MEAN	1,752,600
16	*24,686,000
	*17,587,000

* These specimens unbroken at these cycles.

✓ Machine failed to switch off on failure of specimen.

THIS DOCUMENT PROVIDED BY THE ABBOTT AEROSPACE
TECHNICAL LIBRARY
ABBOTTAEROSPACE.COM

TABLE I (Contd.)

GROUP 4	
Stress T/in.^{2}	Endurance cycles
40	60,000
	64,000
	62,000
	68,000
LOG MEAN	63,430
32	125,000
	73,000
	138,000
	132,000
LOG MEAN	113,550
24	530,000
	498,000
	537,000
	621,000
LOG MEAN	554,630
22	*27,626,000
	921,000
	589,000
LOG MEAN	2,465,500
20	1,167,000
	1,956,000
	*21,210,000
	*22,620,000
LOG MEAN	5,753,000
18.4	*24,423,000

GROUP 5	
Stress T/in.^{2}	Endurance cycles
56	9,000
	10,000
LOG MEAN	9,490
40	74,000
	61,000
	65,000
LOG MEAN	66,450
32	213,000
	205,000
	353,000
	171,000
LOG MEAN	226,560
24	782,000
	481,000
	598,000
LOG MEAN	608,140
20	1,460,000
	*24,229,000
	*54,670,000
LOG MEAN	12,459,000
18.4	* 8,266,000
	*21,231,000
	*17,809,000

GROUP 6	
Stress T/in.^{2}	Endurance cycles
56	12,000
	9,000
LOG MEAN	10,390
40	48,000
	47,000
	58,000
	88,000
LOG MEAN	58,250
32	137,000
	92,000
	142,000
	241,000
LOG MEAN	141,910
24	721,000
	1,015,000
	603,000
	764,000
LOG MEAN	761,920
20	871,000
	*8,523,000
	*49,058,000
	*21,234,000
	*33,012,000
LOG MEAN	12,061,000

* These specimens unbroken at these cycles.

THIS DOCUMENT PROVIDED BY THE ABBOTT AEROSPACE
TECHNICAL LIBRARY
ABBOTTAEROSPACE.COM

TABLE I (Contd.)

GROUP 7	
Stress T/in.^{2}	Endurance cycles
48	ø 40,000 ø 32,000
LOG MEAN	35,780
40	109,000 75,000 141,000 140.000
LOG MEAN	112,720
32	239,000 272,000 201,000 ø 478.000
LOG MEAN	281,120
30	264,000 770,000 308,000 292.000
LOG MEAN	367,700
28	⋇15,740,000 289,000 ⋇21,423,000 ø 442,000 474.000
LOG MEAN	1,828,100
24	⋇ 9,442,000 ⋇14,623,000 ø 464.000
LOG MEAN	4,001,300

GROUP 8	
Stress T/in.^{2}	Endurance cycles
36	361,000 188,000 287.000
LOG MEAN	269,080
32	⋇ 8,167,000 ⋇16,568,000 ⋇ 5,619,000

⋇ These specimens unbroken at these cycles.

ø Replacement specimens.

THIS DOCUMENT PROVIDED BY THE ABBOTT AEROSPACE
TECHNICAL LIBRARY
ABBOTTAEROSPACE.COM

TABLE II

RS.140 MATERIAL - RESULTS OF TESTS

GROUP 9	
Stress T/in.^{2}	Endurance cycles
41.4	35,000
	26,000
	28,000
	✓54.000
LOG MEAN	34,245
31	62,000
	62,000
	85,000
	60,000
LOG MEAN	66,542
20.7	178,000
	202,000
	202,000
	194.000
LOG MEAN	193,730
18.1	503,000
	319,000
	281,000
	322.000
LOG MEAN	347,140
15.6	*29,842,000
	464,000
	*29,779,000
	* 4.337.000
LOG MEAN	6,502,800

GROUP 10	
Stress T/in.^{2}	Endurance cycles
31	73,000
	69,000
	71,000
	60.000
LOG MEAN	68,062
20.7	198,000
	242,000
	238,000
	221,000
LOG MEAN	224,080
18.1	314,000
	350,000
	324,000
	254.000
LOG MEAN	308,390
15.6	1,418,000
	781,000
	691,000
	735.000
LOG MEAN	865,960
13.5	*38,551,000
	972,000
	*45,644,000
	*12.281.000
LOG MEAN	12,040,000

GROUP 11	
Stress T/in.^{2}	Endurance cycles
44.6	83,000
	74,000
	57,000
LOG MEAN	70,485
41.4	114,000
	109,000
	130,000
	112,000
LOG MEAN	115,990
36.2	116,000
	161,000
	164,000
	170.000
LOG MEAN	151,040
31	200,000
	359,000
	251,000
	545.000
LOG MEAN	314,770
28.5	*18,026,000
	* 5,350,000
	*15,309,000
	*52,933,000
25.9	*23,357,000

* These specimens unbroken at these cycles.

✓ Machine failed to switch off on failure of specimen.

THIS DOCUMENT PROVIDED BY THE ABBOTT AEROSPACE
TECHNICAL LIBRARY
ABBOTTAEROSPACE.COM

TABLE II (Contd.)

GROUP 12	
Stress T/in.^{2}	Endurance cycles
41.4	118,000
	118,000
	ø165,000
	114,000
LOG MEAN	127,210
36.2	293,000
	153,000
	148,000
	198,000
LOG MEAN	190,370
33.6	180,000
	218,000
	250,000
	219,000
LOG MEAN	215,280
31	380,000
	⁂20,875,000
	249,000
	246,000
	312,000
LOG MEAN	685,810
28.5	⁂13,656,000
	⁂15,513,000
	316,000
LOG MEAN	4,060,700

GROUP 13	
Stress T/in.^{2}	Endurance cycles
50.7	64,000
	62,000
	65,000
	72,000
LOG MEAN	62,820
46.6	166,000
	94,000
	91,000
	83,000
LOG MEAN	104,180
44	114,000
	125,000
	85,000
	113,000
LOG MEAN	108,170
41.4	⁂15,424,000
	245,000
	⁂15,241,000
	160,000
LOG MEAN	1,742,200
38.8	⁂13,675,000
	198,000
LOG MEAN	1,645,900
36.2	206,000
	⁂15,830,000
LOG MEAN	1,805,900

GROUP 14	
Stress T/in.^{2}	Endurance cycles
46.6	87,000
	83,000
	84,000
	97,000
LOG MEAN	87,579
41.4	100,000
	159,000
	97,000
	142,000
LOG MEAN	121,650
36.2	208,000
	243,000
	217,000
	12,961,000
LOG MEAN	614,040
33.6	⁂13,710,000
	2,905,000
	⁄14,845,000
	⁂15,360,000
LOG MEAN	9,763,200
31	⁂15,258,000
	⁂18,938,000
	⁂101,122,000
	⁂ 52,268,000

⁂ These specimens unbroken at these cycles.

⁄ Machine failed to switch off on failure of specimen.

THIS DOCUMENT PROVIDED BY THE ABBOTT AEROSPACE
TECHNICAL LIBRARY
ABBOTTAEROSPACE.COM

TABLE II (Contd.)

GROUP 15	
Stress T/in.^{2}	Endurance cycles
46.6	90,000
	101,000
	183,000
	100.000
LOG MEAN	113,580
41.4	253,000
	177,000
	123,000
	153.000
LOG MEAN	170,380
38.8	*10,929,000
36.2	541,000
	1,015,000
	*15,079,000
	*14,182.000
LOG MEAN	3,291,500
33.6	*15,013,000
	7,517,000
	*17.381,000
LOG MEAN	12,517,000

* These specimens unbroken at these cycles.

THIS DOCUMENT PROVIDED BY THE ABBOTT AEROSPACE
TECHNICAL LIBRARY
ABBOTTAEROSPACE.COM

TABLE III

H.50 MATERIAL - RESULTS OF TESTS

GROUP 16	
Stress T/in.^{2}	Endurance cycles
42.3	58,000
	71,000
	62,000
	✓145,000
LOG MEAN	78,000
36.3	128,000
	115,000
	98,000
	100.000
LOG MEAN	109,600
33.3	801,000
	109,000
	1.053.000
LOG MEAN	451,340
30.2	165,000
	8,481,000
	1,006,000
	622,000
	162,000
LOG MEAN	676,710
27.2	✓15,223,000
	*16,594,000
	✓ 6,959,000
	✓15.062.000
LOG MEAN	12,753,000

GROUP 17	
Stress T/in.^{2}	Endurance cycles
42.3	82,000
39.3	71,000
36.3	94,000
	1,006,000
	1,076,000
	109.000
LOG MEAN	324,490
33.3	163,000
30.2	236,000
	746,000
	316,000
LOG MEAN	381,780
27.2	3,310,000
	609.000
LOG MEAN	1,419,800
24.2	✓⊠13,314,000
	✓⊠14,610,000
	2,391,000
	5.278.000
LOG MEAN	7,038,800
21.2	✓⊠10,624,000
	2,909,000
	✓⊠11,101,000
	✓⊠ 2.110.000
LOG MEAN	5,186,900

GROUP 18	
Stress T/in.^{2}	Endurance cycles
54.5	45,000
	65,000
	32.000
LOG MEAN	45,404
45.3	52,000
	116,000
	6,358,000
	50.000
LOG MEAN	209,250
42.3	107,000
	138,000
	93,000
	82.000
LOG MEAN	103,010
39.3	112,000
	131,000
	136,000
	99.000
LOG MEAN	118,550
36.3	253,000
	209,000
	*14,753,000
	*14.808.000
LOG MEAN	1,843,800

* These specimens unbroken at these cycles.
✓ Machine failed to switch off on failure of specimen.
⊠ These specimens failed under the clamp due to fretting action of the clamping plates.

THIS DOCUMENT PROVIDED BY THE ABBOTT AEROSPACE
TECHNICAL LIBRARY
ABBOTTAEROSPACE.COM

THIS DOCUMENT PROVIDED BY THE ABBOTT AEROSPACE
TECHNICAL LIBRARY
ABBOTTAEROSPACE.COM

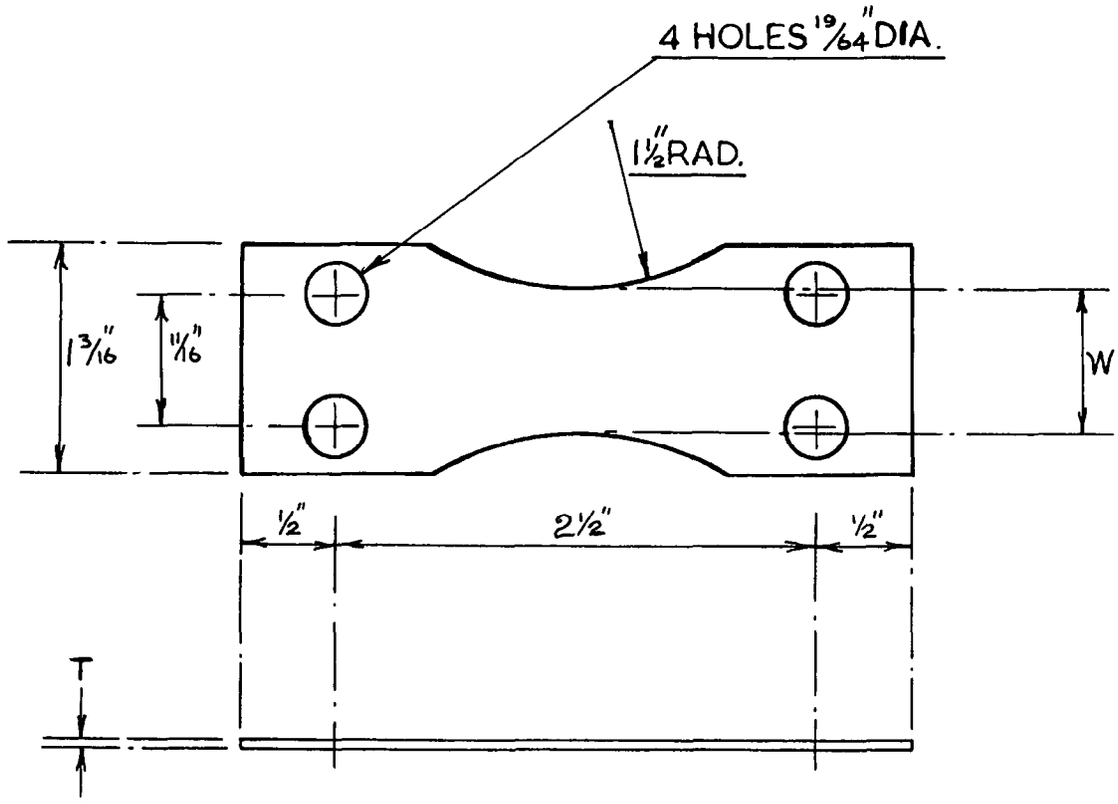

GROUP NO.	W.	T.	GROUP NO.	W.	T.
1	.75	15 S.W.G.	10	.50	13 S.W.G.
2	.75	15 S.W.G	11	.75	.06"
3	.50	13 S.W.G.	12	.75	.06"
4	.50	13 S.W.G.	13	.75	.06"
5	.50	.064"	14	.75	.06"
6	.50	.064"	15	.75	.06"
7	.75	.064"	16	.75	.064"
8	.75	.064"	17	.75	.064"
9	.50	13 S.W.G.	18	.75	.064"

RS. 130 MATERIAL.

RS 140 MATERIAL

RS. 140 MATERIAL

H50 MATERIAL

TEST SPECIMENS

FIG. 1

THIS DOCUMENT PROVIDED BY THE ABBOTT AEROSPACE
TECHNICAL LIBRARY
ABBOTTAEROSPACE.COM

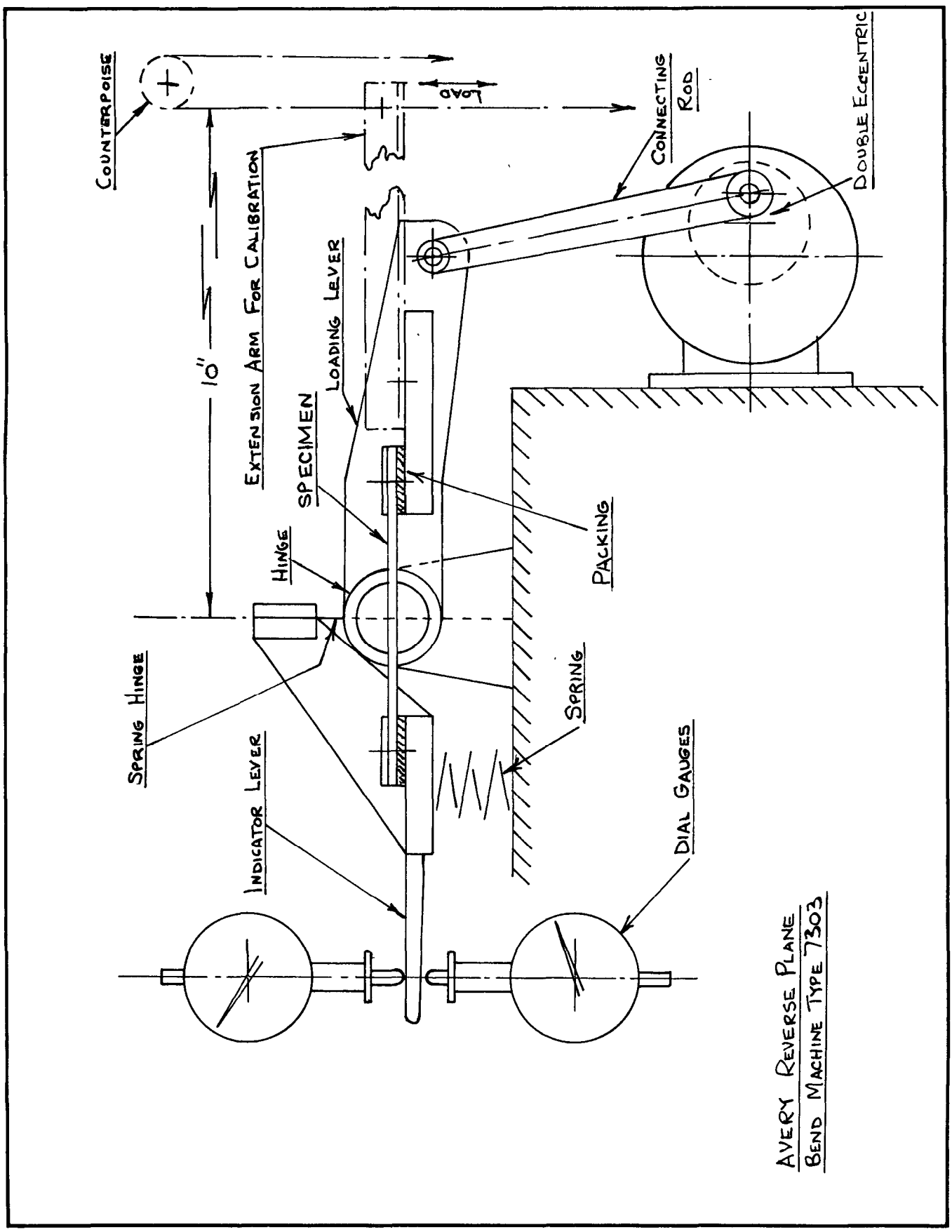

METHOD OF CALIBRATION AND TEST

FIG. 2

THIS DOCUMENT PROVIDED BY THE ABBOTT AEROSPACE
TECHNICAL LIBRARY
ABBOTTAEROSPACE.COM

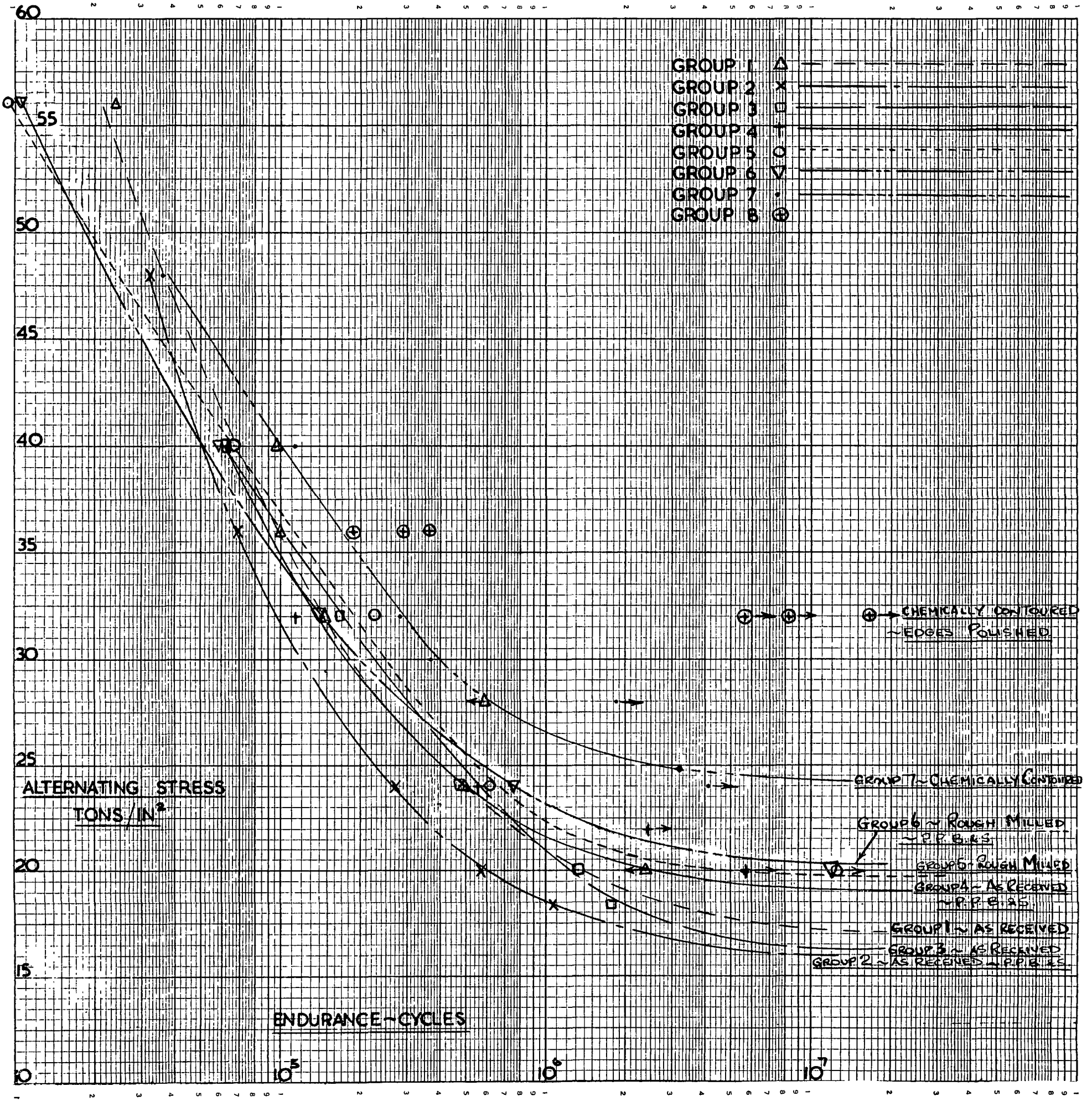

SUMMARY OF RESULTS ~ RS. 130 MATERIAL

FIG. 3

This Document Provided by the Abbott Aerospace
Technical Library
abbottaerospace.com

THIS DOCUMENT PROVIDED BY THE ABBOTT AEROSPACE
TECHNICAL LIBRARY
ABBOTTAEROSPACE.COM

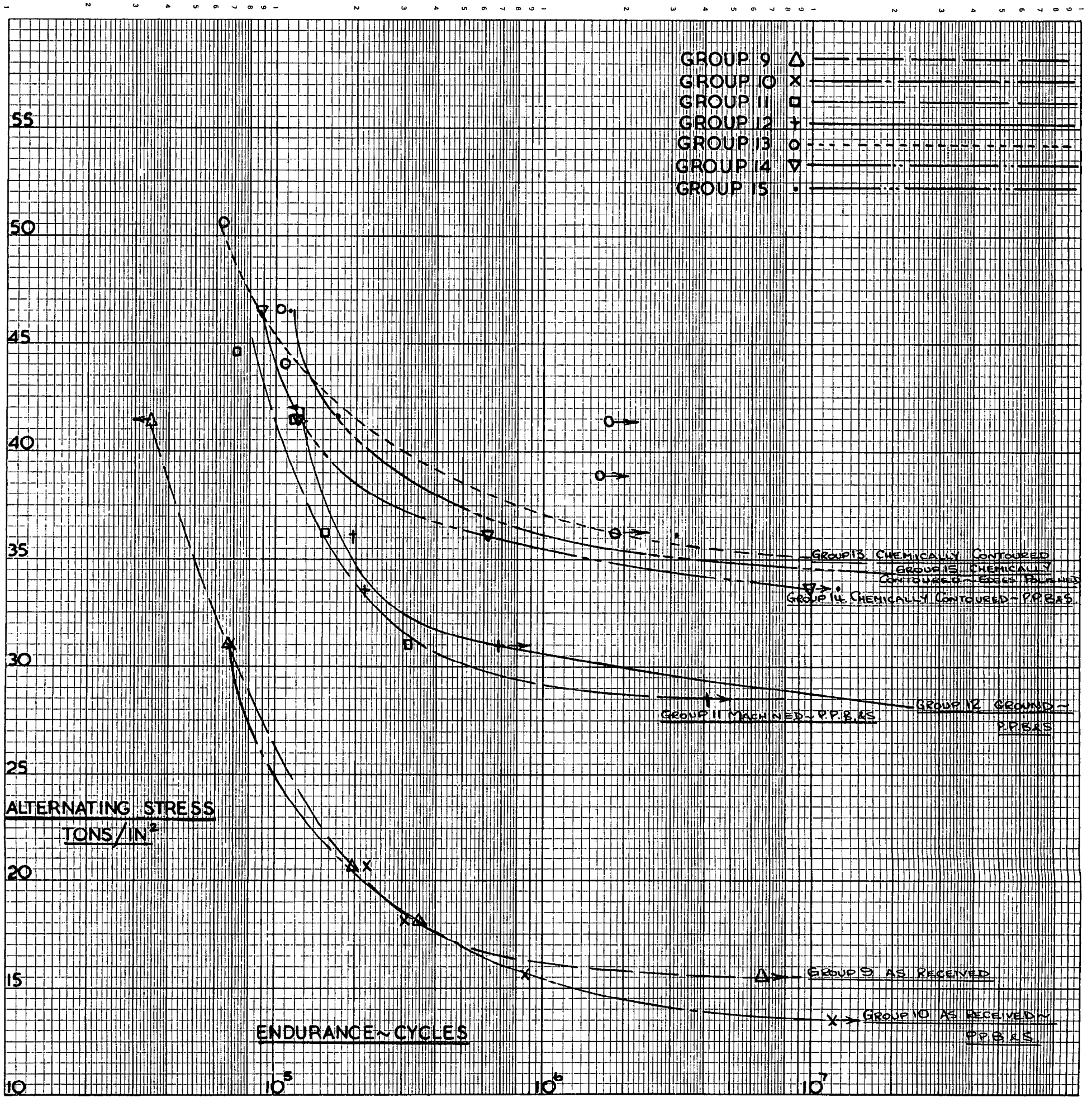

SUMMARY OF RESULTS ~ RS 140 MATERIAL

FIG. 4

THIS DOCUMENT PROVIDED BY THE ABBOTT AEROSPACE
TECHNICAL LIBRARY
ABBOTTAEROSPACE.COM

THIS DOCUMENT PROVIDED BY THE ABBOTT AEROSPACE
TECHNICAL LIBRARY
ABBOTTAEROSPACE.COM

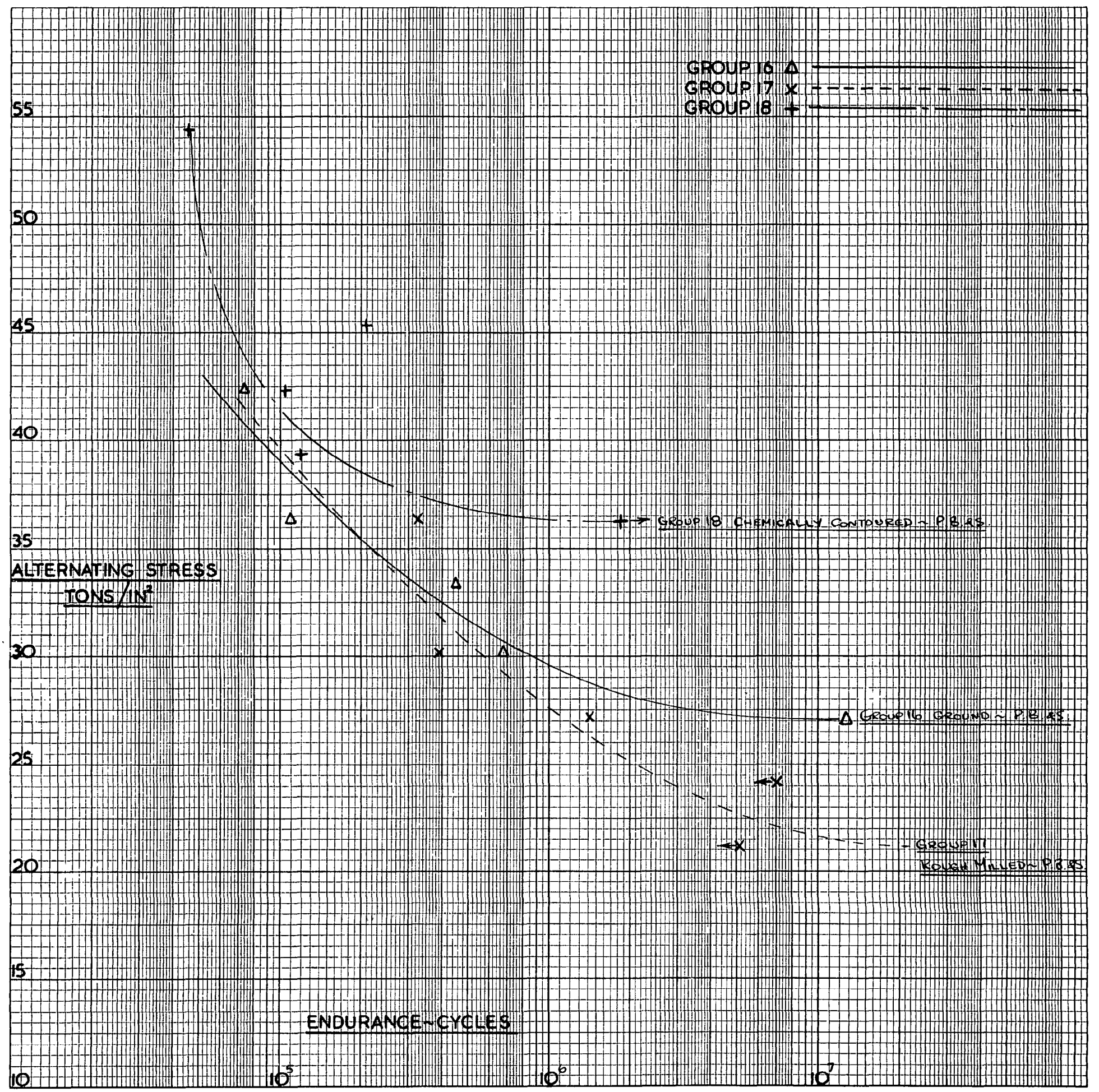

SUMMARY OF RESULTS ~ H50 MATERIAL

FIG. 5

This Document Provided by the Abbott Aerospace
TECHNICAL LIBRARY
ABBOTTAEROSPACE.COM

THIS DOCUMENT PROVIDED BY THE ABBOTT AEROSPACE
TECHNICAL LIBRARY
ABBOTTAEROSPACE.COM

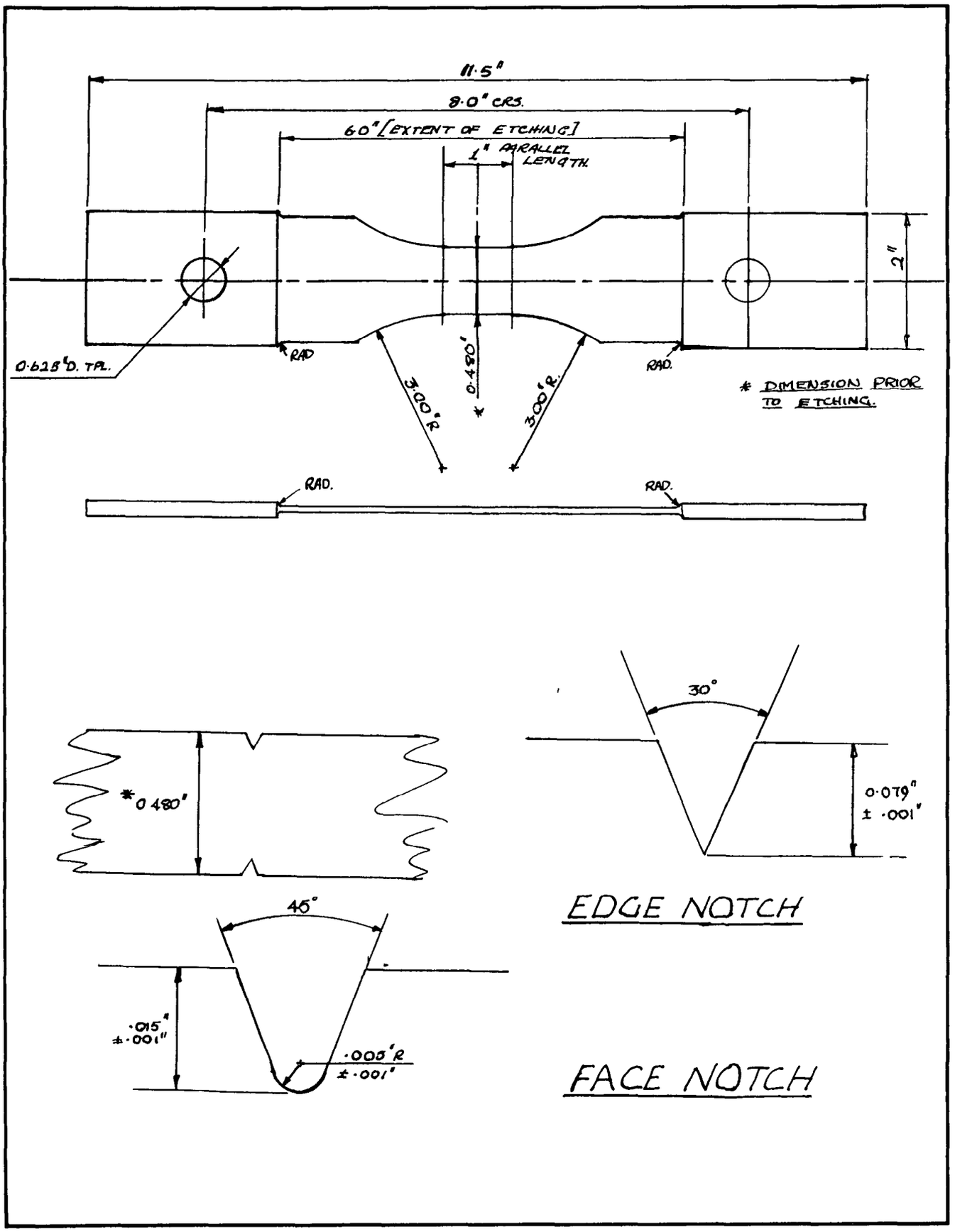

DETAILS OF LOAD SPECIMEN.

FIG. 6

This Document Provided by the Abbott Aerospace
Technical Library
abbottaerospace.com

THIS DOCUMENT PROVIDED BY THE ABBOTT AEROSPACE
TECHNICAL LIBRARY
ABBOTTAEROSPACE.COM

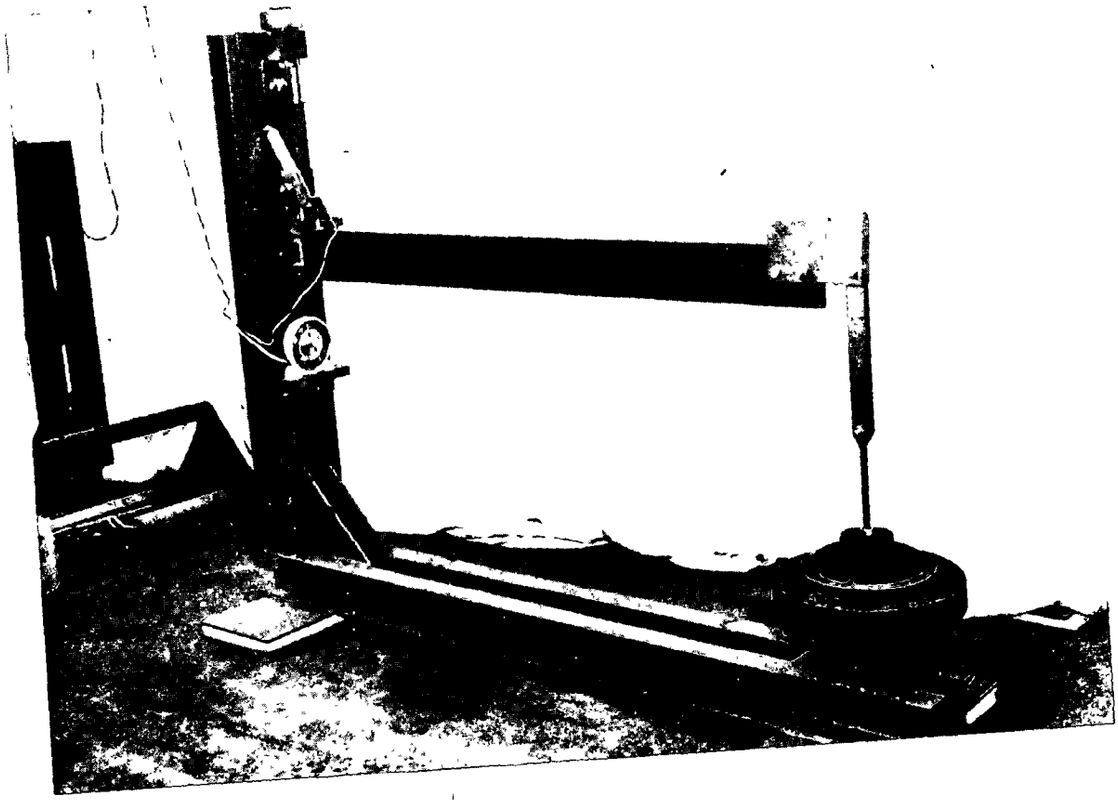

PLATE 1. SUSTAINED LOAD TEST RIG

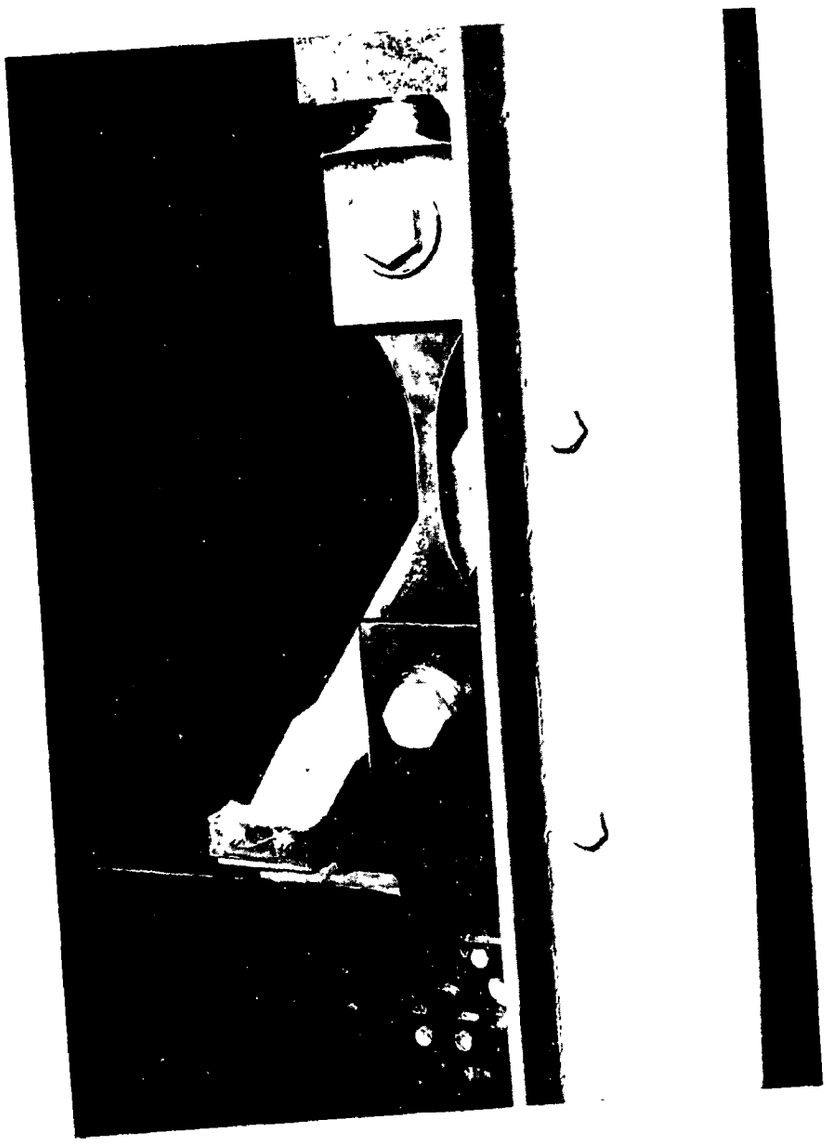

PLATE 2. SPECIMEN UNDER TEST

This Document Provided by the Abbott Aerospace
Technical Library
abbottaerospace.com

THIS DOCUMENT PROVIDED BY THE ABBOTT AEROSPACE
TECHNICAL LIBRARY
ABBOTTAEROSPACE.COM

A.R.C. C.P. No. 812
May, 1964
Westland Aircraft Ltd., Saunders-Roe Division

INFLUENCE OF CHEMICAL CONTOURING ON THE FATIGUE AND SUSTAINED LOAD PROPERTIES OF HIGH TENSILE STEEL SHEET

Reverse bend fatigue and sustained load tests have been carried out on three low alloy steel sheet materials, 1% Cr-Mo, 3% Cr-Mo-V, and 5% Cr-Mo-V, heat treated to 88, 103 and 121 t.s.i. respectively, and chemically contoured in acid etching solutions developed by Bristol Aerojet Ltd.

The fatigue properties after chemical contouring were higher than those after machining or grinding.

The chemical contouring process caused no failures under sustained load at high proportions of the notched ultimate stress.

A.R.C. C.P. No. 812
May, 1964
Westland Aircraft Ltd., Saunders-Roe Division

INFLUENCE OF CHEMICAL CONTOURING ON THE FATIGUE AND SUSTAINED LOAD PROPERTIES OF HIGH TENSILE STEEL SHEET

Reverse bend fatigue and sustained load tests have been carried out on three low alloy steel sheet materials, 1% Cr-Mo, 3% Cr-Mo-V, and 5% Cr-Mo-V, heat treated to 88, 103 and 121 t.s.i. respectively, and chemically contoured in acid etching solutions developed by Bristol Aerojet Ltd.

The fatigue properties after chemical contouring were higher than those after machining or grinding.

The chemical contouring process caused no failures under sustained load at high proportions of the notched ultimate stress.

A.R.C. C.P. No. 812
May, 1964
Westland Aircraft Ltd., Saunders-Roe Division

INFLUENCE OF CHEMICAL CONTOURING ON THE FATIGUE AND SUSTAINED LOAD PROPERTIES OF HIGH TENSILE STEEL SHEET

Reverse bend fatigue and sustained load tests have been carried out on three low alloy steel sheet materials, 1% Cr-Mo, 3% Cr-Mo-V, and 5% Cr-Mo-V, heat treated to 88, 103 and 121 t.s.i. respectively, and chemically contoured in acid etching solutions developed by Bristol Aerojet Ltd.

The fatigue properties after chemical contouring were higher than those after machining or grinding.

The chemical contouring process caused no failures under sustained load at high proportions of the notched ultimate stress.

This Document Provided by the Abbott Aerospace
Technical Library
abbottaerospace.com

This Document Provided by the Abbott Aerospace
Technical Library
abbottaerospace.com

THIS DOCUMENT PROVIDED BY THE ABBOTT AEROSPACE
TECHNICAL LIBRARY
ABBOTTAEROSPACE.COM

© *Crown copyright 1965*

Printed and published by
HER MAJESTY'S STATIONERY OFFICE
To be purchased from
York House, Kingsway, London W.C.2
423 Oxford Street, London W.1
13A Castle Street, Edinburgh 2
109 St. Mary Street, Cardiff
39 King Street, Manchester 2
50 Fairfax Street, Bristol 1
35 Smallbrook, Ringway, Birmingham 5
80 Chichester Street, Belfast 1
or through any bookseller

Printed in England

C.P. No. 812

S.O. Code No. 23-9016-12