THIS DOCUMENT PROVIDED BY THE ABBOTT AEROSPACE
TECHNICAL LIBRARY
ABBOTTAEROSPACE.COM

NOTICE: When Government drawings, specifications, or other data are used for any purpose other than in connection with a definitely related Government procurement operation, the United States Government thereby incurs no responsibility, nor any obligation whatsoever; and the fact that the Government may have formulated, furnished, or in any way supplied the said drawings, specifications, or other data is not to be regarded by implication or otherwise as in any manner licensing the holder or any other person or corporation, or conveying any rights or permission to manufacture, use, or sell any patented invention that may in any way be related thereto.

NOTE: This drawing was approved by joint action of the Air Force and Navy Departments as the Air Force-Navy standard for this product. This drawing supersedes all antecedent standard drawings for the same product and shall become effective for the procurement of aeronautical supplies, or for use in new designs, not later than 6 months after the latest date of approval shown.

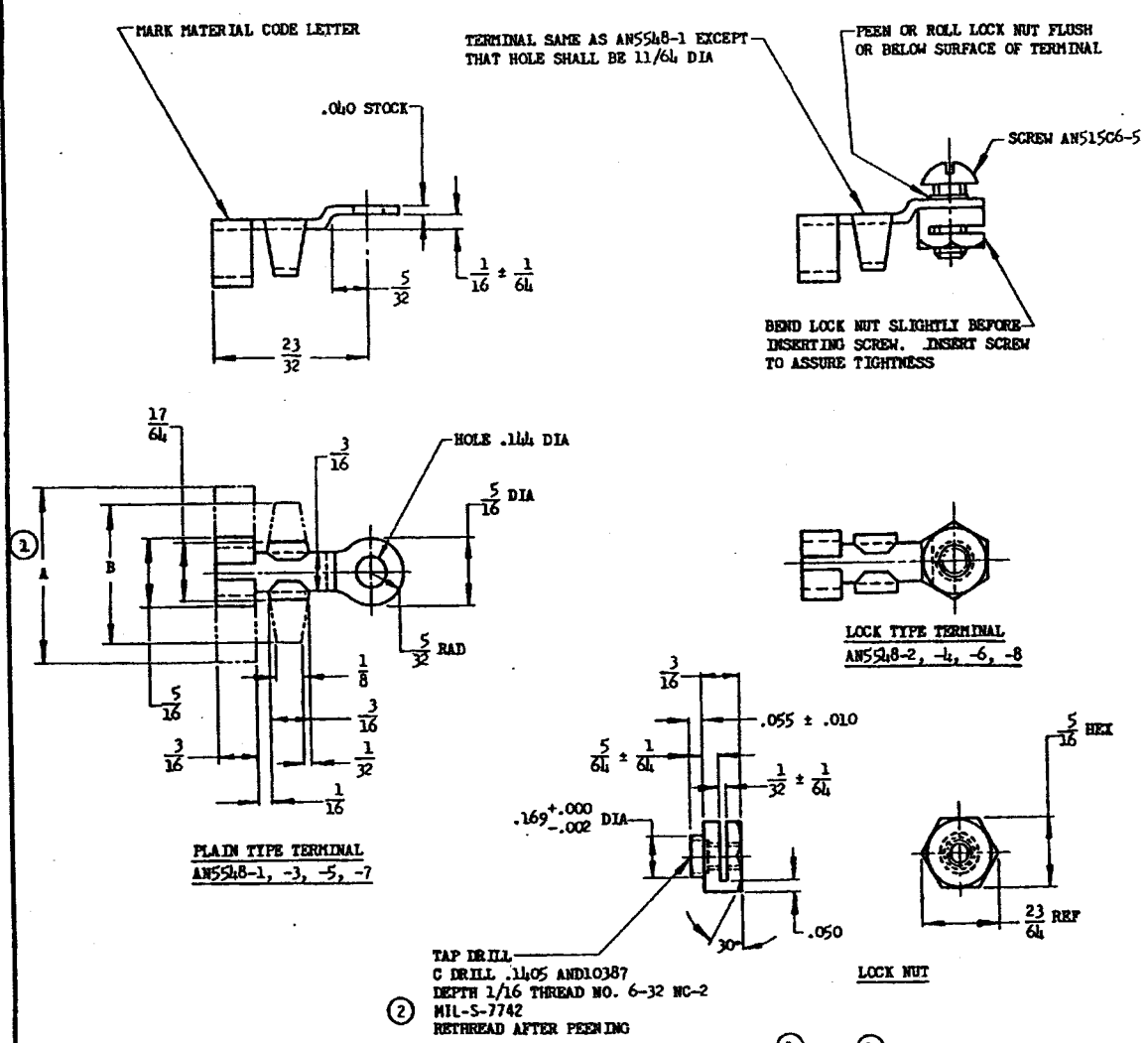

	AN PART NO.	TERMINAL TYPE	TERMINAL MATERIAL	MATERIAL CODE MARKING	A ±.016 (1)	B ±.031 (1)
(a)	AN5548-1	PLAIN	CHROMEL	CR	.797	.641
(a)	AN5548-2	LOCK	ALUMEL	AL	.797	.641
(a)	AN5548-3	PLAIN	ALUMEL	AL	.797	.641
(a)	AN5548-4	LOCK	CHROMEL	CR	.797	.641
(1)	AN5548-5	PLAIN	CHROMEL	CR	.484	.375
(1)	AN5548-6	LOCK	ALUMEL	AL	.484	.375
(1)	AN5548-7	PLAIN	ALUMEL	AL	.484	.375
(1)	AN5548-8	LOCK	CHROMEL	CR	.484	.375

(1) (a) AN5548-1, -2, -3, and -4 ONLY SHALL BE STOCKED BY THE MILITARY SERVICES. EARS MAY BE CLIPPED TO PROVIDE NEAT INSTALLATION.

(2) MATERIAL: TERMINAL, SEE TABLE.
NUT, CORROSION RESISTANT, MS35782.

REMOVE ALL BURRS AND SHARP EDGES.

DIMENSIONS IN INCHES. UNLESS OTHERWISE SPECIFIED, TOLERANCES: FRACTIONS ±1/32, DECIMALS ±.005, ANGLES ±1/2°.

Custodians:
NAVY - AS
AIR FORCE - 85

Review activities:
AIR FORCE - 99
DLA - GS

Preparing activity:
AIR FORCE - 85

(Project No. 5940-1148)

AMSC N/A

APPROVED 20 Dec 48 REVISED (1) 31 Jan 50 (2) 19 Apr 93

PROCUREMENT SPECIFICATION	AIR FORCE-NAVY AERONAUTICAL STANDARD	AN5548
NONE	(1) TERMINAL — LUG, THERMOCOUPLE, CHROMEL AND ALUMEL	