THIS DOCUMENT PROVIDED BY THE ABBOTT AEROSPACE
TECHNICAL LIBRARY
ABBOTTAEROSPACE.COM

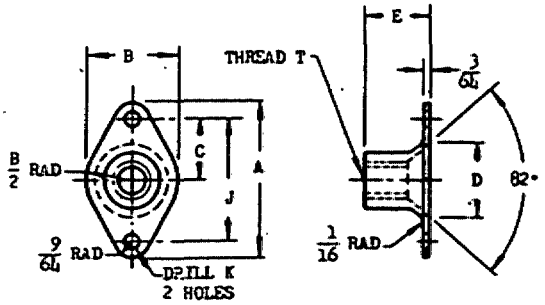

SELF LOCKING

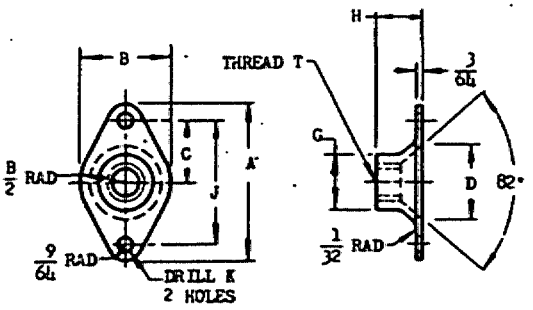

PLAIN
NOT SELF LOCKING

SIZE	A	B	C	D	(a) E MAX	H	G	J ±.005	K +.005 −.000 DIA
NO. 8	31/32	7/16	11/32	.320	23/64	1/4	1/4	.688	.098
NO. 10	31/32	7/16	11/32	.372	13/32	1/4	1/4	.688	.098
1/4	1- 9/32	9/16	1/2	.492	29/64	5/16	3/8	1.000	.098
5/16	1- 9/32	3/4	1/2	.618	17/32	3/8	7/16	1.000	.130

DASH NUMBERS FINE THREAD

AL ALLOY PLAIN	AL ALLOY SELF LOCKING	STEEL PLAIN	STEEL SELF LOCKING	THREAD T
D836	DF836	836	F836	NO. 8-36 NF-2
D1032	DF1032	1032	F1032	NO. 10-32 NF-3
D428	DF428	428	F428	1/4 -28 NF-3
D524	DF524	524	F524	5/16-24 NF-3

DASH NUMBERS COARSE THREAD

D832	DF832	832	F832	NO. 8-32 NC-2
D1024	DF1024	1024	F1024	NO. 10-24 NC-2
D420	DF420	420	F420	1/4 -20 NC-3
D518	DF518	518	(2) F518	5/16-18 NC-3

(a) MINIMUM E NOT SPECIFIED. LIMITED ONLY BY STRENGTH REQUIREMENT OF SPECIFICATION.

(2) **INACTIVE FOR DESIGN AFTER 14 APR 1949. NO SUPERSEDING AN STANDARD.**

(2) FOR DEFINITION AND APPLICATION OF DRAWING STATUS NOTE SEE ANA BULLETIN NO. 337.

SELF LOCKING PLATE NUTS:
SHAPE OF TOP OPTIONAL TO SUIT LOCKING METHOD.
NUTS MAY BE MADE OF SHEET METAL.
NUTS FOR USE BY WELDING TO BE MADE OF CORROSION RESISTING STEEL AND WITHOUT RIVET HOLES. SPACING OF WELDING PROJECTIONS MUST BE EQUAL TO DIMENSION J.

PLAIN PLATE NUTS, MATERIAL AND FINISH:
STEEL, SPECIFICATION AN-S-11 OR SPECIFICATION AN-QQ-S-646, CADMIUM PLATE, SPECIFICATION AN-P-61 OR ZINC PLATE, SPECIFICATION AN-P-32.
(2) ALUMINUM ALLOY, SPECIFICATION QQ-A-351 OR QQ-A-355, TENSILE STRENGTH 55000 PSI. ANODIZE, SPECIFICATION AN-QQ-A-696. REQUIREMENTS ON MATERIAL AND DIMENSIONS G AND H WAIVERED IF PLAIN PLATE NUT MEETS THE TENSILE STRENGTH REQUIREMENT FOR CORRESPONDING SIZE OF SELF LOCKING PLATE NUT.

ADD WC BEFORE PLAIN STEEL DASH NUMBERS FOR CORROSION RESISTING STEEL SELF LOCKING NUTS FOR USE BY WELDING.

EXAMPLES OF PART NUMBERS: AN367DF836 = NO. 8-36 SELF LOCKING ALUMINUM ALLOY PLATE NUT.
AN367 -836 = NO. 8-36 PLAIN STEEL PLATE NUT.
AN367WC836 = NO. 8-36 SELF LOCKING CORROSION RESISTING STEEL PLATE NUT FOR USE BY WELDING.

(2) DIMENSIONS IN INCHES. UNLESS OTHERWISE SPECIFIED, TOLERANCES: FRACTIONS ±1/64, DECIMALS ±.010, ANGLES ±1/2°. THREADS IN ACCORDANCE WITH AN-S-126.

FOR INSTALLATION INSTRUCTIONS SEE DRAWING AND10068.

APPROVED 9 Apr 45 REVISED (1) 2 May 45 (2) 14 Apr 49

PROCUREMENT SPECIFICATION	AIR FORCE-NAVY AERONAUTICAL STANDARD	AN367
AN-N-5	(2) NUT—PLATE, COUNTERSUNK 82°	

SUPERSEDES USAF DRAWING 367

NOTICE: When Government drawings, specifications, or other data are used for any purpose other than in connection with a definitely related Government procurement operation, the United States Government thereby incurs no responsibility, nor any obligation whatsoever; and the fact that the Government may have formulated, furnished, or in any way supplied the said drawings, specifications, or other data is not to be regarded by implication or otherwise as in any manner licensing the holder or any other person or corporation, or conveying any rights or permission to manufacture, use, or sell any patented invention that may in any way be related thereto.

NOTE: This drawing was approved by joint action of the Air Force and Navy Departments as the Air Force-Navy standard for this product. This drawing supersedes all intended standard drawings for the same product and shall become effective for the procurement of aeronautical supplies, or for use in new designs, not later than 6 months after the latest date of approval shown. It may be put into effect, however, at an earlier date after promulgation.