THIS DOCUMENT PROVIDED BY THE ABBOTT AEROSPACE
TECHNICAL LIBRARY
ABBOTTAEROSPACE.COM

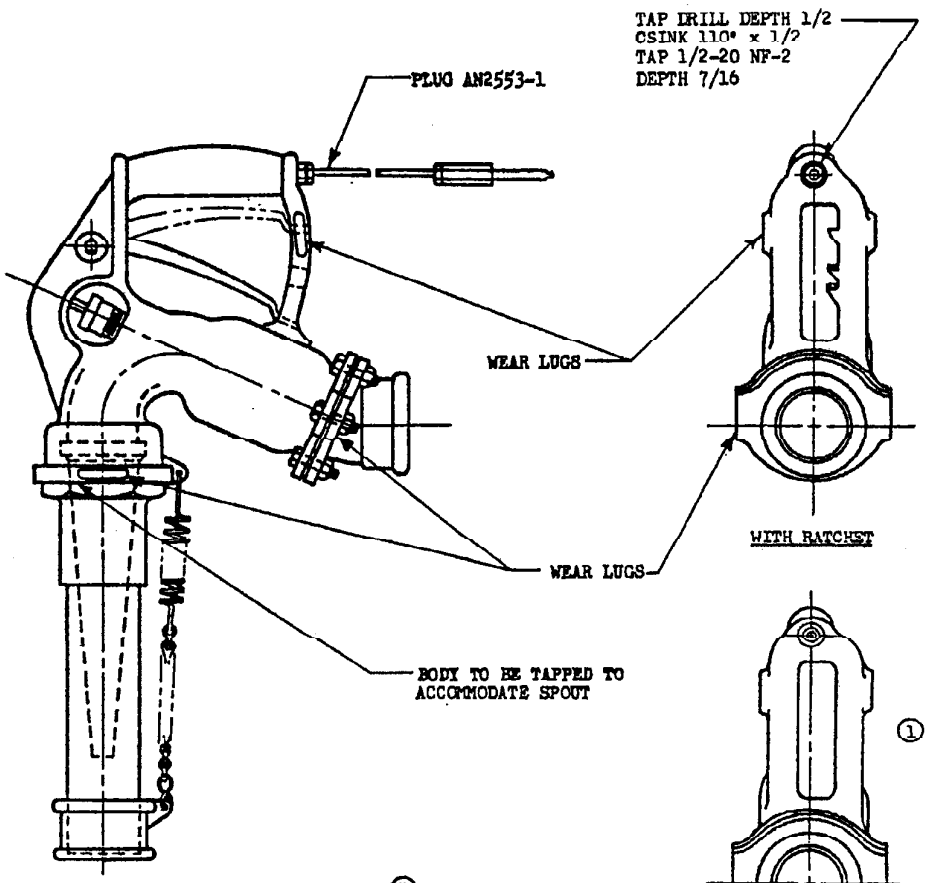


WITH RATCHET

WITHOUT RATCHET

①

①

| AN PART NO. | | NOMINAL SIZE INCHES |
|---|---|---|
| WITH RATCHET | WITHOUT RACHET | |
| AN2555-1 | AN2555-11 | 1-1/4 |
| AN2555-2 | AN2555-12 | 1-1/2 |
| AN2555-3 | AN2555-13 | 2 |
| | | |

DIMENSIONS IN INCHES. UNLESS OTHERWISE SPECIFIED, TOLERANCES ON FRACTIONS ±1/64.

THIS DRAWING AND THE SPECIFICATION COMPLEMENT ONE ANOTHER, AND, TOGETHER, COMPLETELY DEFINE THIS PRODUCT.

APPROVED 29 Nov 43 REVISED ① 16 Sep 44

| PROCUREMENT SPECIFICATION | ARMY-NAVY AERONAUTICAL STANDARD | AN2555 |
|---|---|---|
| AN-N-6 | NOZZLE - AIRCRAFT FUELING | |

NOTICE: No deviation from this drawing permitted except as a war emergency measure and then only after formal authorization from the Material Command or the Bureau of Aeronautics through the Procuring Service's District Representative.

NOTICE: The Government drawings, specifications, or other data are used for any purpose other than in connection with a definitely related Government procurement operation, the United States Government thereby incurs no responsibility, nor any obligation whatsoever; and the fact that the Government may have formulated, furnished, or in any way supplied the said drawings, specifications, or other data is not to be regarded by implication or otherwise as in any manner licensing the holder or any other person or corporation, or conveying any rights or permission to manufacture, use, or sell any patented invention that may in any way be related thereto.

NOTE: This drawing was approved by joint action of the War and Navy Departments as the Army-Navy standard for this product. This drawing supersedes all extensions standard drawings for this product. Any deviation from this standard must be approved by the Bureau of Aeronautics, Navy Dept., and the Material Command, War Dept. Any other data shall be considered as in no way binding upon the Bureau of Aeronautics, Navy Dept., or the Material Command, War Dept., unless specifically approved by them. It may be put into effect, however, as other data other procurements.